SECTION AT
AUTOMATIC TRANSAXLE

CONTENTS

INDEX FOR DTC **5**
Alphabetical Index 5
DTC No. Index 6
PRECAUTIONS **7**
Precautions for Supplemental Restraint System (SRS) “AIR BAG” and “SEAT BELT PRE-TEN-SIONER” 7
Precautions for On Board Diagnostic (OBD) System of A/T and Engine 7
Precautions 7
Service Notice or Precautions 9
PREPARATION **10**
Special Service Tools 10
Commercial Service Tools 14
A/T FLUID **16**
Checking A/T Fluid 16
Changing A/T Fluid 17
A/T Fluid Cooler Cleaning 17
A/T CONTROL SYSTEM **20**
Cross-sectional View 20
Shift Mechanism 21
TCM Function 30
CAN Communication 31
Input/Output Signal of TCM 31
Line Pressure Control 32
Shift Control 33
Lock-up Control 34
Engine Brake Control (Overrun Clutch Control) 35
Control Valve 37
ON BOARD DIAGNOSTIC (OBD) SYSTEM **38**
Introduction 38
OBD-II Function for A/T System 38
One or Two Trip Detection Logic of OBD-II 38
OBD-II Diagnostic Trouble Code (DTC) 38
Malfunction Indicator Lamp (MIL) 41
TROUBLE DIAGNOSIS **42**
DTC Inspection Priority Chart 42
Fail-safe 42
How to Perform Trouble Diagnoses for Quick and Accurate Repair 44
A/T Electrical Parts Location 49
Circuit Diagram 50
Inspections before Trouble Diagnosis 51
Road Test 56
Check before Engine Is Started 56
Check at Idle 57
Cruise Test — Part 1 59
Cruise Test — Part 2 62
Cruise Test — Part 3 63
Vehicle Speed When Shifting Gears 65
Vehicle Speed When Performing and Releasing Lock-up 65
Symptom Chart 66
TCM Terminals and Reference Value 76
CONSULT-II Function (A/T) 79
Diagnostic Procedure Without CONSULT-II 89
DTC U1000 CAN COMMUNICATION LINE **93**
Description 93
On Board Diagnosis Logic 93
Possible Cause 93
DTC Confirmation Procedure 93
Wiring Diagram — AT — CAN 94
Diagnostic Procedure 95
DTC P0705 PARK/NEUTRAL POSITION (PNP) SWITCH **96**
Description 96
CONSULT-II Reference Value 96
On Board Diagnosis Logic 96
Possible Cause 96
DTC Confirmation Procedure 96
Wiring Diagram — AT — PNP/SW 97
Diagnostic Procedure 99
DTC P0710 A/T FLUID TEMPERATURE SENSOR CIRCUIT **101**
Description 101
CONSULT-II Reference Value 101
On Board Diagnosis Logic 101
Possible Cause 101
DTC Confirmation Procedure 101
Wiring Diagram — AT — FTS 102

Diagnostic Procedure 103
Component Inspection 105
DTC P0720 VEHICLE SPEED SENSOR·A/T (REVOLUTION SENSOR) 106
Description 106
CONSULT-II Reference Value 106
On Board Diagnosis Logic 106
Possible Cause 106
DTC Confirmation Procedure 106
Wiring Diagram — AT — VSSA/T 108
Diagnostic Procedure 109
DTC P0725 ENGINE SPEED SIGNAL 112
Description 112
CONSULT-II Reference Value 112
On Board Diagnosis Logic 112
Possible Cause 112
DTC Confirmation Procedure 112
Wiring Diagram — AT — ENGSS 113
Diagnostic Procedure 114
DTC P0731 A/T 1ST GEAR FUNCTION 116
Description 116
On Board Diagnosis Logic 116
Possible Cause 116
DTC Confirmation Procedure 116
Wiring Diagram — AT — 1STSIG 118
Diagnostic Procedure 119
DTC P0732 A/T 2ND GEAR FUNCTION 121
Description 121
On Board Diagnosis Logic 121
Possible Cause 121
DTC Confirmation Procedure 121
Wiring Diagram — AT — 2NDSIG 123
Diagnostic Procedure 124
DTC P0733 A/T 3RD GEAR FUNCTION 126
Description 126
On Board Diagnosis Logic 126
Possible Cause 126
DTC Confirmation Procedure 126
Wiring Diagram — AT — 3RDSIG 128
Diagnostic Procedure 129
DTC P0734 A/T 4TH GEAR FUNCTION 131
Description 131
CONSULT-II Reference Value 131
On Board Diagnosis Logic 131
Possible Cause 131
DTC Confirmation Procedure 132
Wiring Diagram — AT — 4THSIG 133
Diagnostic Procedure 134
DTC P0740 TORQUE CONVERTER CLUTCH SOLENOID VALVE 138
Description 138
CONSULT-II Reference Value 138
On Board Diagnosis Logic 138
Possible Cause 138
DTC Confirmation Procedure 138
Wiring Diagram — AT — TCV 139
Diagnostic Procedure 140
Component Inspection 142
DTC P0744 A/T TCC S/V FUNCTION (LOCK-UP). 143
Description 143
CONSULT-II Reference Value 143
On Board Diagnosis Logic 143
Possible Cause 143
DTC Confirmation Procedure 144
Wiring Diagram — AT — TCCSIG 145
Diagnostic Procedure 146
DTC P0745 LINE PRESSURE SOLENOID VALVE. 151
Description 151
CONSULT-II Reference Value 151
On Board Diagnosis Logic 151
Possible Cause 151
DTC Confirmation Procedure 151
Wiring Diagram — AT — LPSV 152
Diagnostic Procedure 153
Component Inspection 156
DTC P0750 SHIFT SOLENOID VALVE A 157
Description 157
CONSULT-II Reference Value 157
On Board Diagnosis Logic 157
Possible Cause 157
DTC Confirmation Procedure 157
Wiring Diagram — AT — SSV/A 158
Diagnostic Procedure 159
Component Inspection 161
DTC P0755 SHIFT SOLENOID VALVE B 162
Description 162
CONSULT-II Reference Value 162
On Board Diagnosis Logic 162
Possible Cause 162
DTC Confirmation Procedure 162
Wiring Diagram — AT — SSV/B 163
Diagnostic Procedure 164
Component Inspection 166
DTC P1705 ACCELERATOR PEDAL POSITION (APP) SENSOR 167
Description 167
CONSULT-II Reference Value 167
On Board Diagnosis Logic 167
Possible Cause 167
DTC Confirmation Procedure 167
Wiring Diagram — AT — TPS 169
Diagnostic Procedure 170
DTC P1760 OVERRUN CLUTCH SOLENOID VALVE 172
Description 172
CONSULT-II Reference Value 172
On Board Diagnosis Logic 172
Possible Cause 172
DTC Confirmation Procedure 172
Wiring Diagram — AT — OVRCSV 173
Diagnostic Procedure 174
Component Inspection 176
DTC VEHICLE SPEED SENSOR MTR 177
Description 177
CONSULT-II Reference Value 177
On Board Diagnosis Logic 177
Possible Cause 177
DTC Confirmation Procedure 177

Wiring Diagram — AT — VSSMTR 178
Diagnostic Procedure 179
DTC BATT/FLUID TEMP SEN (A/T FLUID TEMP SENSOR CIRCUIT AND TCM POWER SOURCE) 181
Description 181
CONSULT-II Reference Value 181
On Board Diagnosis Logic 181
Possible Cause 181
DTC Confirmation Procedure 181
Wiring Diagram — AT — BA/FTS 182
Diagnostic Procedure 183
Component Inspection 186
MAIN POWER SUPPLY AND GROUND CIRCUIT. 187
Description 187
On Board Diagnosis Logic 187
Possible Cause 187
DTC Confirmation Procedure 187
Wiring Diagram — AT — MAIN 188
Diagnostic Procedure 189
DTC CONTROL UNIT (RAM), CONTROL UNIT (ROM) 191
Description 191
On Board Diagnosis Logic 191
Possible Cause 191
DTC Confirmation Procedure 191
Diagnostic Procedure 191
DTC CONTROL UNIT(EEPROM) 192
Description 192
On Board Diagnosis Logic 192
Possible Cause 192
DTC Confirmation Procedure 192
Diagnostic Procedure 192
TROUBLE DIAGNOSES FOR SYMPTOMS 193
Wiring Diagram — AT — NONDTC 193
OD OFF Indicator Lamp Does Not Come On 196
Engine Cannot Be Started in “P” and “N” Position 198
In “P” Position, Vehicle Moves Forward or Backward When Pushed 199
In “N” Position, Vehicle Moves 200
Large Shock “N” → “R” Position 202
Vehicle Does Not Creep Backward in “R” Position 203
Vehicle Does Not Creep Forward in “D”, “2” or “1” Position 206
Vehicle Cannot Be Started From D_1 208
A/T Does Not Shift: $D_1 \rightarrow D_2$ or Does Not Kickdown: $D_4 \rightarrow D_2$ 211
A/T Does Not Shift: $D_2 \rightarrow D_3$ 214
A/T Does Not Shift: $D_3 \rightarrow D_4$ 217
A/T Does Not Perform Lock-up 219
A/T Does Not Hold Lock-up Condition 220
Lock-up Is Not Released 222
Engine Speed Does Not Return to Idle (Light Braking $D_4 \rightarrow D_3$) 223
A/T Does Not Shift: $D_4 \rightarrow D_3$, When OD OFF ... 225
A/T Does Not Shift: $D_3 \rightarrow 2_2$, When Selector Lever “D” → “2” Position 226
A/T Does Not Shift: $2_2 \rightarrow 1_1$, When Selector Lever “2” → “1” on Position 228
Vehicle Does Not Decelerate by Engine Brake ... 231
TCM Self-Diagnosis Does Not Activate 235
SHIFT CONTROL SYSTEM 242
Control Device Removal and Installation 242
Adjustment of A/T Position 243
Checking of A/T Position 244
A/T SHIFT LOCK SYSTEM 245
Description 245
Shift Lock System Electrical Parts Location 245
Wiring Diagram — AT — SHIFT 246
Diagnostic Procedure 247
KEY INTERLOCK CABLE 249
Components 249
Removal 249
Installation 250
ON-VEHICLE SERVICE 251
Control Valve Assembly and Accumulators 251
Park/Neutral Position (PNP) Switch 254
Differential Side Oil Seal Replacement 256
Revolution Sensor Replacement 258
AIR BREATHER HOSE 259
Removal and Installation 259
TRANSAXLE ASSEMBLY 260
Removal and Installation 260
OVERHAUL 263
Components 263
Oil Channel 269
Locations of Adjusting Shims, Needle Bearings, Thrust Washers and Snap Rings 270
DISASSEMBLY 271
Disassembly 271
REPAIR FOR COMPONENT PARTS 287
Manual Shaft 287
Oil Pump 290
Control Valve Assembly 295
Control Valve Upper Body 304
Control Valve Lower Body 308
Reverse Clutch 311
High Clutch 316
Forward and Overrun Clutches 322
Low & Reverse Brake 329
Rear Internal Gear, Forward Clutch Hub and Overrun Clutch Hub 333
Output Shaft, Idler Gear, Reduction Pinion Gear and Bearing Retainer 337
Band Servo Piston Assembly 343
Final Drive 349
ASSEMBLY 353
Assembly (1) 353
Adjustment (1) 354
Assembly (2) 359
Adjustment (2) 366
Assembly (3) 369
SERVICE DATA AND SPECIFICATIONS (SDS) ... 376
General Specifications 376
Vehicle Speed When Shifting Gears 376
Vehicle Speed When Performing and Releasing Look-up 376
Stall Revolution 376

Line Pressure 376
Control Valves 377
Accumulator 377
Clutch and Brakes 378
Final Drive 380
Planetary Carrier and Oil Pump 381
Input Shaft 381
Reduction Pinion Gear 382
Band Servo 382
Output Shaft 383
Bearing Retainer 383
Total End Play 383
Reverse Clutch End Play 383
Removal and Installation 384
Shift Solenoid Valves 384
Solenoid Valves 384
A/T Fluid Temperature Sensor 384
Revolution Sensor 384
Dropping Resistor 384

INDEX FOR DTC

PFP:00024

Alphabetical Index

ACS008HT

NOTE:
If DTC “U1000” is displayed with other DTC, first perform the trouble diagnosis for “DTC U1000 CAN COMMUNICATION LINE”. Refer to AT-93 .

Items (CONSULT-II screen terms)	DTC CONSULT-II GST*1	Reference page
A/T 1ST GR FNCTN	P0731	AT-116
A/T 2ND GR FNCTN	P0732	AT-121
A/T 3RD GR FNCTN	P0733	AT-126
A/T 4TH GR FNCTN	P0734	AT-131
A/T TCC S/V FNCTN	P0744	AT-143
ATF TEMP SEN/CIRC	P0710	AT-101
BATT/FLUID TEMP SEN	—	AT-181
CAN COMM CIRCUIT	U1000	AT-93
CONTROL UNIT(RAM)	—	AT-191
CONTROL UNIT(ROM)	—	AT-191
CONT UNIT(EEPROM)	—	AT-192
ENGINE SPEED SIG	P0725	AT-112
LINE PRESSURE S/V	P0745	AT-151
OVERRUN CLUTCH S/V	P1760	AT-172
PNP SW/CIRC	P0705	AT-96
SHIFT SOLENOID/V A*2	P0750	AT-157
SHIFT SOLENOID/V B*2	P0755	AT-162
T/C CLUTCH SOL/V	P0740	AT-138
THROTTLE POSI SEN*2	P1705	AT-167
VHCL SPEED SEN-A/T*3	P0720	AT-106
VHCL SPEED SEN-MTR	—	AT-177

*1: These numbers are prescribed by SAE J2012.
*2: When the fail-safe operation occurs, the MIL illuminates.
*3: The MIL illuminates when both the “Revolution sensor signal” and the “Vehicle speed sensor signal” meet the fail-safe condition at the same time.

DTC No. Index

ACS008HU

NOTE:

If DTC “U1000” is displayed with other DTC, first perform the trouble diagnosis for “DTC U1000 CAN COMMUNICATION LINE”. Refer to AT-93 .

DTC CONSULT-II GST*1	Items (CONSULT-II screen terms)	Reference page
P0705	PNP SW/CIRC	AT-96
P0710	ATF TEMP SEN/CIRC	AT-101
P0720	VHCL SPEED SEN-A/T*3	AT-106
P0725	ENGINE SPEED SIG	AT-112
P0731	A/T 1ST GR FNCTN	AT-116
P0732	A/T 2ND GR FNCTN	AT-121
P0733	A/T 3RD GR FNCTN	AT-126
P0734	A/T 4TH GR FNCTN	AT-131
P0740	T/C CLUTCH SOL/V	AT-138
P0744	A/T TCC S/V FNCTN	AT-143
P0745	LINE PRESSURE S/V	AT-151
P0750	SHIFT SOLENOID/V A*2	AT-157
P0755	SHIFT SOLENOID/V B*2	AT-162
P1705	THROTTLE POSI SEN*2	AT-167
P1760	OVERRUN CLUTCH S/V	AT-172
U1000	CAN COMM CIRCUIT	AT-93
—	BATT/FLUID TEMP SEN	AT-181
—	CONTROL UNIT(RAM)	AT-191
—	CONTROL UNIT(ROM)	AT-191
—	CONT UNIT(EEPROM)	AT-192
—	VHCL SPEED SEN-MTR	AT-177

*1: These numbers are prescribed by SAE J2012.

*2: When the fail-safe operation occurs, the MIL illuminates.

*3: The MIL illuminates when both the “Revolution sensor signal” and the “Vehicle speed sensor signal” meet the fail-safe condition at the same time.

PRECAUTIONS

PFP:00001

Precautions for Supplemental Restraint System (SRS) “AIR BAG” and “SEAT BELT PRE-TENSIONER”

ACS007QJ

The Supplemental Restraint System such as “AIR BAG” and “SEAT BELT PRE-TENSIONER”, used along with a front seat belt, helps to reduce the risk or severity of injury to the driver and front passenger for certain types of collision. Information necessary to service the system safely is included in the SRS and SB section of this Service Manual.

WARNING:

- **To avoid rendering the SRS inoperative, which could increase the risk of personal injury or death in the event of a collision which would result in air bag inflation, all maintenance must be performed by an authorized NISSAN/INFINITI dealer.**
- **Improper maintenance, including incorrect removal and installation of the SRS, can lead to personal injury caused by unintentional activation of the system. For removal of Spiral Cable and Air Bag Module, see the SRS section.**
- **Do not use electrical test equipment on any circuit related to the SRS unless instructed to in this Service Manual. SRS wiring harnesses can be identified by yellow and/or orange harnesses or harness connectors.**

Precautions for On Board Diagnostic (OBD) System of A/T and Engine

ACS007QK

The ECM has an on board diagnostic system. It will light up the malfunction indicator lamp (MIL) to warn the driver of a malfunction causing emission deterioration.

CAUTION:

- **Be sure to turn the ignition switch OFF and disconnect battery negative cable from battery negative terminal before any repair or inspection work. The open/short circuit of related switches, sensors, solenoid valves, etc. will cause the MIL to light up.**
- **Be sure to connect and lock the connectors securely after work. A loose (unlocked) connector will cause the MIL to light up due to an open circuit. (Be sure the connectors are free from water, grease, dirt, bent terminals, etc.)**
- **Be sure to route and secure the harnesses properly after work. Interference of the harness with a bracket, etc. may cause the MIL to light up due to a short circuit.**
- **Be sure to connect the rubber tubes properly after work. A misconnected or disconnected rubber tube may cause the MIL to light up due to a malfunction of the EGR system or fuel injection system, etc.**
- **Be sure to erase the unnecessary malfunction information (repairs completed) from the TCM and ECM before returning the vehicle to the customer.**

Precautions

ACS007QN

- **Before connecting or disconnecting the TCM harness connector, turn ignition switch OFF and disconnect battery negative cable from battery negative terminal. Failure to do so may damage the TCM. Because battery voltage is applied to TCM even if ignition switch is turned off.**

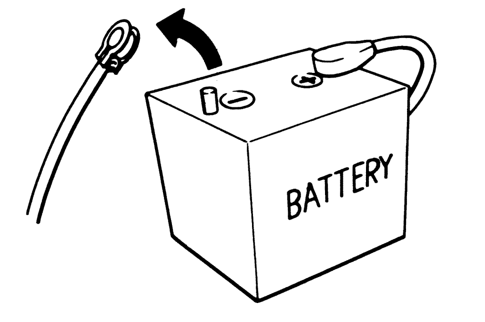

SEF289H

- **When connecting or disconnecting pin connectors into or from TCM, take care not to damage pin terminals (bend or break).**
  Make sure that there are not any bends or breaks on TCM pin terminal, when connecting pin connectors.

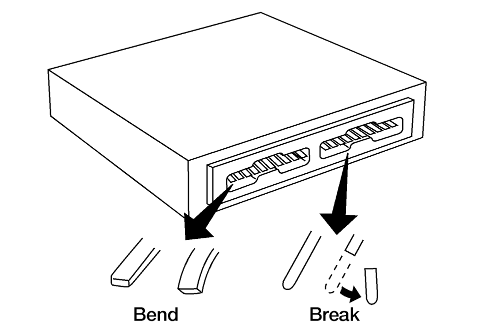

AAT470A

- **Before replacing TCM, perform TCM input/output signal inspection and make sure whether TCM functions properly or not. Refer to** AT-76, "TCM Terminals and Reference Value" **.**

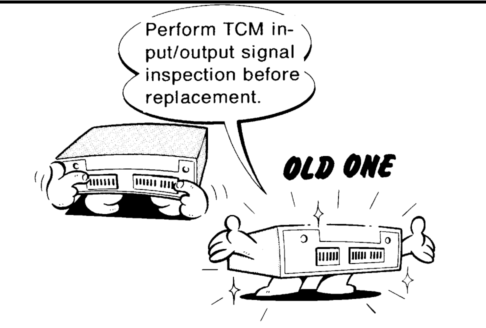

MEF040DA

- **After performing each TROUBLE DIAGNOSIS, perform "DTC (Diagnostic Trouble Code) Confirmation Procedure".**
  The DTC should not be displayed in the "DTC Confirmation Procedure" if the repair is completed.
- Before proceeding with disassembly, thoroughly clean the outside of the transaxle. It is important to prevent the internal parts from becoming contaminated by dirt or other foreign matter.
- Disassembly should be done in a clean work area.
- Use lint-free cloth or towels for wiping parts clean. Common shop rags can leave fibers that could interfere with the operation of the A/T.

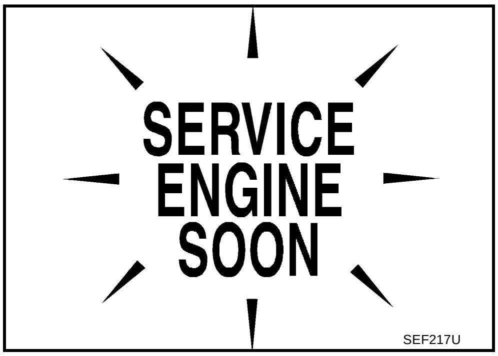

SEF217U

- Place disassembled parts in order for easier and proper assembly.
- All parts should be carefully cleaned with a general purpose, non-flammable solvent before inspection or reassembly.
- Gaskets, seals and O-rings should be replaced any time the A/T is disassembled.
- It is very important to perform functional tests whenever they are indicated.
- The valve body contains precision parts and requires extreme care when parts are removed and serviced. Place disassembled valve body parts in order for easier and proper assembly. Care will also prevent springs and small parts from becoming scattered or lost.
- Properly installed valves, sleeves, plugs, etc. will slide along bores in valve body under their own weight.
- Before assembly, apply a coat of recommended ATF to all parts. Apply petroleum jelly to protect O-rings and seals, or hold bearings and washers in place during assembly. Do not use grease.
- Extreme care should be taken to avoid damage to O-rings, seals and gaskets when assembling.
- Clean or replace ATF cooler if excessive foreign material is found in oil pan or clogging strainer. Refer to AT-9, "ATF COOLER SERVICE" .
- After overhaul, refill the A/T with new ATF.
- When the A/T drain plug is removed, only some of the fluid is drained. Old A/T fluid will remain in torque converter and ATF cooling system.
  Always follow the procedures under "Changing A/T Fluid" in the AT section when changing A/T fluid. Refer to "Changing A/T Fluid", AT-16, "A/T FLUID" .

Service Notice or Precautions

ACS007QO

ATF COOLER SERVICE

If A/T fluid contains frictional material (clutches, bands, etc.), or if an A/T is repaired, overhauled, or replaced, inspect and clean the A/T oil cooler mounted in the radiator or replace the radiator. Flush cooler lines using cleaning solvent and compressed air after repair. Check Service Bulletins for latest A/T oil cooler cleaning procedure. For radiator replacement, refer to CO-11, "RADIATOR" , CO-14, "RADIATOR (ALUMINUM TYPE)" .

TORQUE CONVERTER SERVICE

The torque converter should be replaced under any of the following conditions:

- External leaks in the hub weld area.
- Converter hub is scored or damaged.
- Converter pilot is broken, damaged or fits poorly into crankshaft.
- Steel particles are found after flushing the cooler and cooler lines.
- Pump is damaged or steel particles are found in the converter.
- Vehicle has TCC shudder and/or no TCC apply. Replace only after all hydraulic and electrical diagnoses have been made. (Converter clutch material may be glazed.)
- Converter is contaminated with engine coolant containing antifreeze.
- Internal malfunction of stator roller clutch.
- Heavy clutch debris due to overheating (blue converter).
- Steel particles or clutch lining material found in fluid filter or on magnet indicates that lining material came from converter when no internal parts in unit are worn or damaged.

The torque converter should not be replaced if:

- The fluid has an odor, is discolored, and there is no evidence of metal or clutch facing particles.
- The threads in one or more of the converter bolt holes are damaged.
- A/T malfunction did not display evidence of damaged or worn internal parts, steel particles or clutch plate lining material in unit and inside the fluid filter.
- Vehicle has been exposed to high mileage (only). The exception may be where the torque converter clutch damper plate lining has seen excess wear by vehicles operated in heavy and/or constant traffic, such as taxi, delivery or police use.

OBD-II SELF-DIAGNOSIS

- A/T self-diagnosis is performed by the TCM in combination with the ECM. The results can be read through the blinking pattern of the OD OFF indicator lamp or the malfunction indicator lamp (MIL). Refer to the table on AT-81, "SELF-DIAGNOSTIC RESULT MODE" for the indicator used to display each self-diagnostic result.
- The self-diagnostic results indicated by the MIL are automatically stored in both the ECM and TCM memories.
  Always perform the procedure “HOW TO ERASE DTC” on AT-39, "HOW TO ERASE DTC" to complete the repair and avoid unnecessary blinking of the MIL.
- The following self-diagnostic items can be detected using ECM self-diagnostic results mode* only when the OD OFF indicator lamp does not indicate any malfunctions.
  - PNP switch
  - A/T 1st, 2nd, 3rd, or 4th gear function

*: For details of OBD-II, refer to AT-38, "ON BOARD DIAGNOSTIC (OBD) SYSTEM" .

- **Certain systems and components, especially those related to OBD, may use a new style slide-locking type harness connector.**
  For description and how to disconnect, refer to PG-46, "HARNESS CONNECTOR" .

PREPARATION

PFP:00100

Special Service Tools

ACS007QQ

The actual shapes of Kent-Moore tools may differ from those of special service tools illustrated here.

Tool number (Kent-Moore No.) Tool name	Description
KV381054S0 (J-34286) Puller 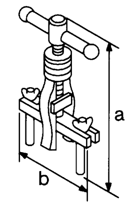 NT414	● Removing differential side bearing outer race ● Removing idler gear bearing outer race **a: 250 mm (9.84 in)** **b: 160 mm (6.30 in)**
ST33400001 (J-26082) Drift 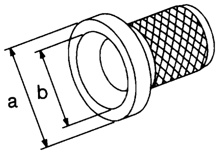 NT086	● Installing differential side oil seal ● Installing oil pump housing oil seal **a: 60 mm (2.36 in) dia.** **b: 47 mm (1.85 in) dia.**
KV40100621 (J-25273) Drift 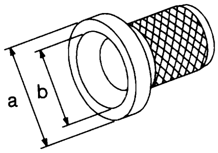 NT086	Installing differential side oil seal (With AWD models) **a: 60 mm (2.36 in) dia.** **b: 47 mm (1.85 in) dia.**
ST2505S001 (J-34301) Oil pressure gauge set 1. ST25051001 (J-34301) Oil pressure gauge 2. ST25052000 (J-34301) Hose 3. ST25053000 (J-25695-3) Joint pipe 4. ST25054000 (J-25695-4) Adapter 5. ST25055000 (J-25695-5) Adapter 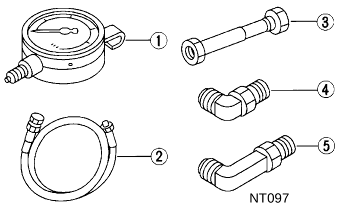 NT097	Measuring line pressure
ST27180001 (J-25726-A) Puller 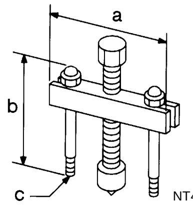 NT424	Removing idler gear **a: 100 mm (3.94 in)** **b: 110 mm (4.33 in)** **c: M8 x 1.25P**

Tool number (Kent-Moore No.) Tool name		Description
ST23540000 (J-25689-A) Pin punch	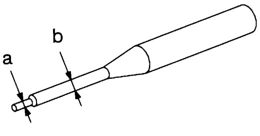 NT442	Removing and installing parking rod plate and manual plate retaining pins **a: 2.3 mm (0.091 in) dia.** **b: 4 mm (0.16 in) dia.**
ST25710000 (J-25689-A) Pin punch	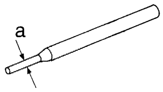 NT410	Aligning groove of manual shaft and hole of transaxle case **a: 2 mm (0.08 in) dia.**
KV32101000 (J-25689-A) Pin punch	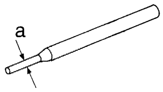 NT410	● Installing manual shaft retaining pin ● Removing and installing pinion mate shaft lock pin **a: 4 mm (0.16 in) dia.**
KV31102400 (J-34285) Clutch spring compressor	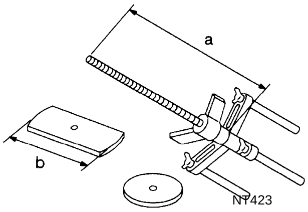 NT423	Removing and installing clutch return springs **a: 320 mm (12.60 in)** **b: 174 mm (6.85 in)**
KV40100630 (J-26092) Drift	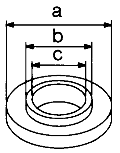 NT107	● Installing reduction pinion gear bearing inner race ● Installing idler gear bearing inner race **a: 67.5 mm (2.657 in) dia.** **b: 44 mm (1.73 in) dia.** **c: 38.5 mm (1.516 in) dia.**
ST30720000 (J-25405) Bearing installer	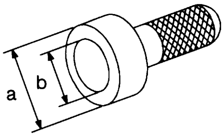 NT115	Installing idler gear bearing outer race **a: 77 mm (3.03 in) dia.** **b: 55.5 mm (2.185 in) dia.**
ST35321000 (—) Drift	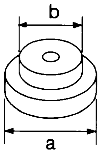 NT073	Installing output shaft bearing **a: 49 mm (1.93 in) dia.** **b: 41 mm (1.61 in) dia.**

Tool number (Kent-Moore No.) Tool name	Description
ST33230000 (J-25805-01) Drift 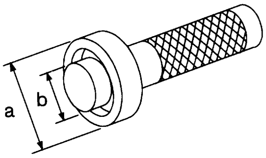 NT084	Installing differential side bearing inner race **a: 51 mm (2.01 in) dia.** **b: 28.5 mm (1.122 in) dia.**
ST33220000 (—) Drift 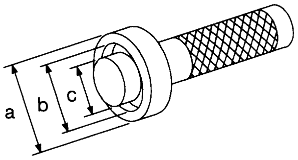 NT085	Selecting differential side bearing adjusting shim **a: 37 mm (1.46 in) dia.** **b: 31 mm (1.22 in) dia.** **c: 22 mm (0.87 in) dia.**
ST3306S001 (J-22888-D) Differential side bearing puller set 1. ST33051001 (J-22888-D) Puller 2. ST33061000 (J-8107-2) Adapter 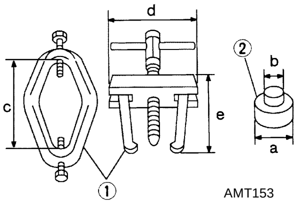 AMT153	Removing differential side bearing inner race **a: 38 mm (1.50 in) dia.** **b: 28.5 mm (1.122 in) dia.** **c: 130 mm (5.12 in)** **d: 135 mm (5.31 in)** **e: 100 mm (3.94 in)**
ST3127S000 (J-25765-A) Preload gauge 1. GG91030000 (J-25765-A) Torque wrench 2. HT62940000 (—) Socket adapter 3. HT62900000 (—) Socket adapter 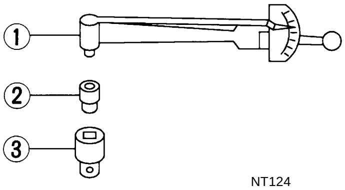 NT124	● Checking final drive assembly turning torque ● Checking reduction pinion gear turning torque
ST35271000 (J-26091) Drift 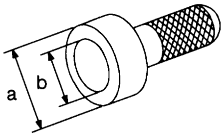 NT115	Installing idler gear **a: 72 mm (2.83 in) dia.** **b: 63 mm (2.48 in) dia.**

Tool number (Kent-Moore No.) Tool name	Description
KV38107700 (J-39713) Preload adapter 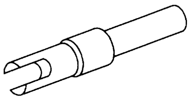 NT087	Selecting differential side bearing adjusting shim
KV38105210 (J-39883) Preload adapter 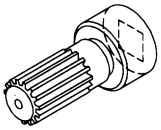 NT075	● Selecting differential side bearing adjusting shim ● Checking fluid drive assembly turning torque

Commercial Service Tools

ACS007QR

Tool name	Description
Power tool 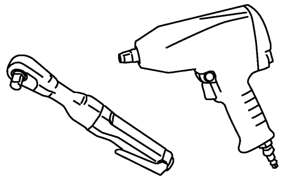 PBIC0190E	Loosening bolts and nuts
Puller 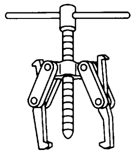 NT077	Removing idler gear bearing inner race
Puller 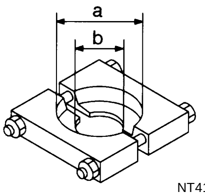 NT411	Removing reduction pinion gear bearing inner race **a: 60 mm (2.36 in) dia.** **b: 35 mm (1.38 in) dia.**
Drift 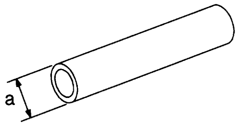 NT083	Installing radial needle bearing on bearing retainer **a: 36 mm (1.42 in) dia.**
Drift 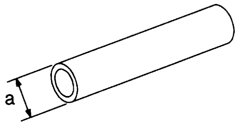 NT083	Installing manual shaft oil seal **a: 22 mm (0.87 in) dia.**
Drift 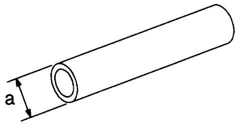 NT083	Removing radial needle bearing from bearing retainer **a: 33.5 mm (1.319 in) dia.**

Tool name	Description
Drift 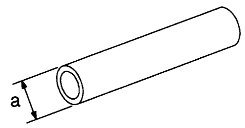	Installing differential side bearing outer race (RH side) **a: 75 mm (2.95 in) dia.**
Drift 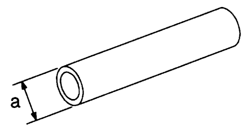	Installing differential side bearing outer race (LH side) **a: 100 mm (3.94 in) dia.**

A/T FLUID

PFP:KLE40

Checking A/T Fluid

ACS007QS

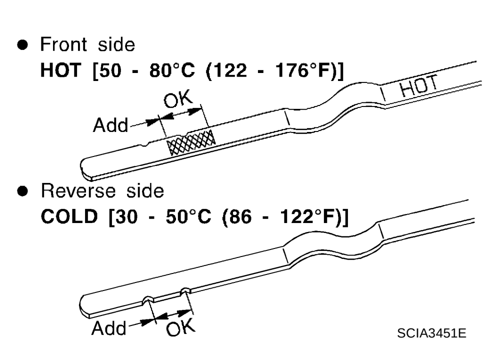

SCIA3451E

1. Warm up engine.
2. Check for A/T fluid leakage.
3. Before driving, A/T fluid level can be checked at A/T fluid temperatures of 30 to 50°C (86 to 122°F) using “COLD” range on A/T fluid level gauge.
   a. Park vehicle on level surface and set parking brake.
   b. Start engine and move selector lever through each gear position. Leave selector lever in “P” position.
   c. Check A/T fluid level with engine idling.

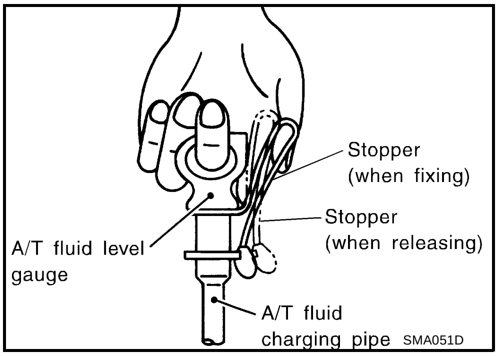

SMA051D

   d. Remove A/T fluid level gauge and note reading. If level is at low side of either range, and A/T fluid to the A/T fluid charging pipe.

      CAUTION:
      When wiping away the A/T fluid level gauge, always use lint-free paper, not a cloth one.

   e. Re-insert A/T fluid level gauge into A/T fluid charging pipe as far as it will go.

      CAUTION:
      Firmly fix the A/T fluid level gauge to the A/T fluid charging pipe using a stopper attached.

   f. Remove A/T fluid level gauge and note reading. If reading is at low side of range, add ATF to the A/T fluid charging pipe.

      CAUTION:
      Do not overfill.

4. Drive vehicle for approximately 5 minutes in urban areas.
5. Recheck A/T fluid level at A/T fluid temperatures of 50 to 80°C (122 to 176°F) using “HOT” range on A/T fluid level gauge.

   CAUTION:
   - **When wiping away the A/T fluid level gauge, always use lint-free paper, not a cloth one.**
   - **Firmly fix the A/T fluid level gauge to the A/T fluid charging pipe using a stopper attached.**

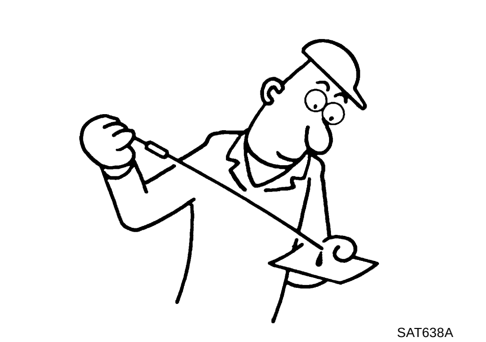
SAT638A

6. Check A/T fluid condition.
   - If ATF is very dark or smells burned, checking operation of A/T. Flush cooling system after repair of A/T.
   - If ATF contains frictional material (clutches, bands, etc.), replace radiator and flush cooler line using cleaning solvent and compressed air after repair of A/T. Refer to CO-11, "RADIATOR" , CO-14, "RADIATOR (ALUMINUM TYPE)" .
7. Install the removed A/T fluid level gauge in the A/T fluid charging pipe.

   CAUTION:
   Firmly fix the A/T fluid level gauge to the A/T fluid charging pipe using a stopper attached.

Changing A/T Fluid

ACS007QT

1. Warm up ATF.
2. Stop engine.
3. Drain ATF from drain hole and refill with new ATF.
   Always refill same volume with drained fluid.

   CAUTION:
   Do not reuse drain plug gasket.

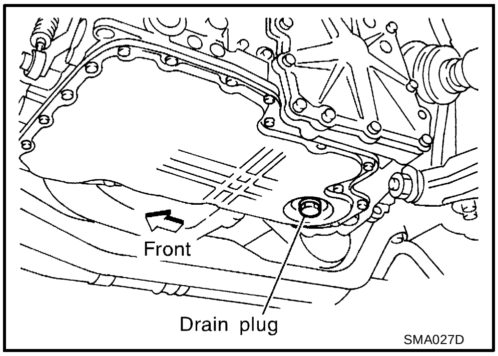

Fluid grade:

NISSAN Automatic Transmission Fluid (ATF), DEXRON™ III/MERCON™ , or equivalent ATF. Refer to MA-10, "RECOMMENDED FLUIDS AND LUBRICANTS" .

Fluid capacity (With torque converter):

Approx. 8.5 ℓ (9 US qt, 7-1/2 Imp qt)

Drain plug

:34 N·m (3.5 kg-m, 25 ft-lb)

4. Run engine at idle speed for 5 minutes.
5. Check A/T fluid level and condition. Refer to AT-16, "Checking A/T Fluid" . If ATF is still dirty, repeat steps 2 through 5.

A/T Fluid Cooler Cleaning

ACS008HQ

Whenever an A/T is repaired, overhauled, or replaced, the A/T fluid cooler mounted in the radiator must be inspected and cleaned.
Metal debris and friction material, if present, can become trapped in the A/T fluid cooler. This debris can contaminate the newly serviced A/T or, in severe cases, can block or restrict the flow of ATF. In either case, malfunction of the newly serviced A/T may result.
Debris, if present, may build up as ATF enters the cooler inlet. It will be necessary to back flush the cooler through the cooler outlet in order to flush out any built up debris.

A/T FLUID COOLER CLEANING PROCEDURE

1. Position an oil pan under the A/T inlet and outlet cooler hoses.
2. Identify the inlet and outlet fluid cooler hoses.
3. Disconnect the A/T fluid cooler inlet and outlet rubber hoses from the steel cooler tubes or bypass valve.

   NOTE:
   Replace the cooler hoses if rubber material from the hose remains on the tube fitting.
4. Allow any ATF that remains in the cooler hoses to drain into the oil pan.

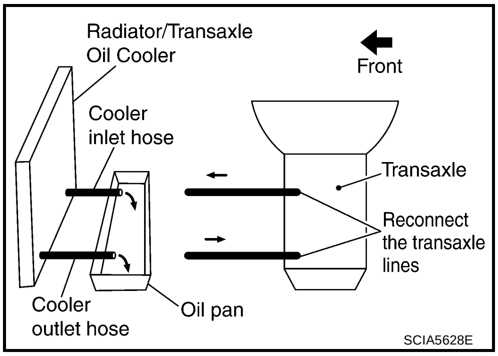

5. Insert the extension adapter hose of a can of Transmission Cooler Cleaner (Nissan P/N 999MP-AM006) into the cooler outlet hose.

   CAUTION:
   - **Wear safety glasses and rubber gloves when spraying the Transmission Cooler Cleaner.**
   - **Spray Transmission Cooler Cleaner only with adequate ventilation.**
   - **Avoid contact with eyes and skin.**
   - **Do not breath vapors or spray mist.**

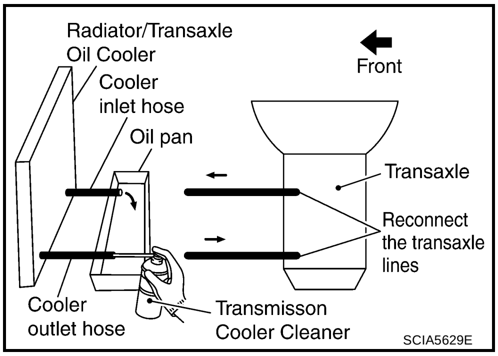

6. Hold the hose and can as high as possible and spray Transmission Cooler Cleaner in a continuous stream into the cooler outlet hose until ATF flows out of the cooler inlet hose for 5 seconds.
7. Insert the tip of an air gun into the end of the cooler outlet hose.
8. Wrap a shop rag around the air gun tip and of the cooler outlet hose.

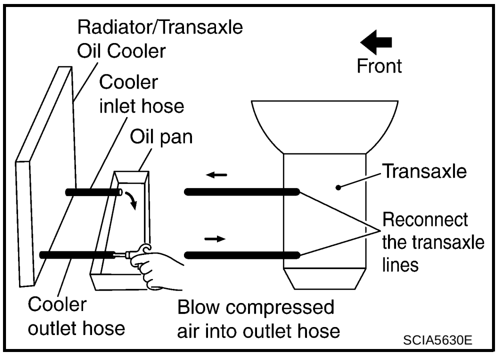

9. Blow compressed air regulated to 5 - 9 kg/cm^2 (70 - 130 psi) through the cooler outlet hose for 10 seconds to force out any remaining ATF.
10. Repeat steps 5 through 9 three additional times.
11. Position an oil pan under the banjo bolts that connect the A/T fluid cooler steel lines to the A/T.
12. Remove the banjo bolts.
13. Flush each steel line from the cooler side back toward the A/T by spraying Transmission Cooler Cleaner in a continuous stream for 5 seconds.
14. Blow compressed air regulated to 5 - 9 kg/cm^2 (70 - 130 psi) through each steel line from the cooler side back toward the A/T for 10 seconds to force out any remaining ATF.
15. Ensure all debris is removed from the steel cooler lines.
16. Ensure all debris is removed from the banjo bolts and fittings.
17. Perform AT-18, "A/T FLUID COOLER DIAGNOSIS PROCEDURE" .

A/T FLUID COOLER DIAGNOSIS PROCEDURE

NOTE:
Insufficient cleaning of the cooler inlet hose exterior may lead to inaccurate debris identification.

1. Position an oil pan under the A/T inlet and outlet cooler hoses.
2. Clean the exterior and tip of the cooler inlet hose.
3. Insert the extension adapter hose of a can of Transmission Cooler Cleaner (Nissan P/N 999MP-AM006) into the cooler outlet hose.

   CAUTION:
   - **Wear safety glasses and rubber gloves when spraying the Transmission Cooler Cleaner.**
   - **Spray Transmission Cooler Cleaner only with adequate ventilation.**
   - **Avoid contact with eyes and skin.**
   - **Do not breath vapors or spray mist.**

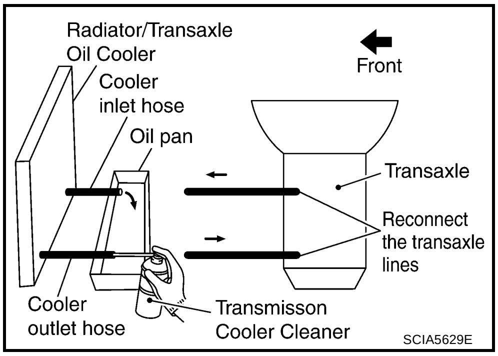

4. Hold the hose and can as high as possible and spray Transmission Cooler Cleaner in a continuous stream into the cooler outlet hose until ATF flows out of the cooler inlet hose for 5 seconds.
5. Tie a common white, basket-type coffee filter to the end of the cooler inlet hose.

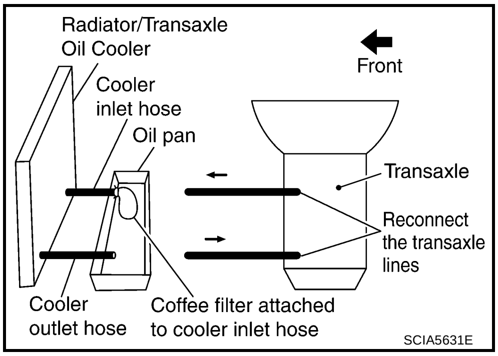

6. Insert the tip of an air gun into the end of the cooler outlet hose.
7. Wrap a shop rag around the air gun tip and end of cooler outlet hose.
8. Blow compressed air regulated to 5 - 9 kg/cm^2 (70 - 130 psi) through the cooler outlet hose to force any remaining ATF into the coffee filter.
9. Remove the coffee filter from the end of the cooler inlet hose.
10. Perform AT-19, "A/T FLUID COOLER INSPECTION PROCEDURE" .

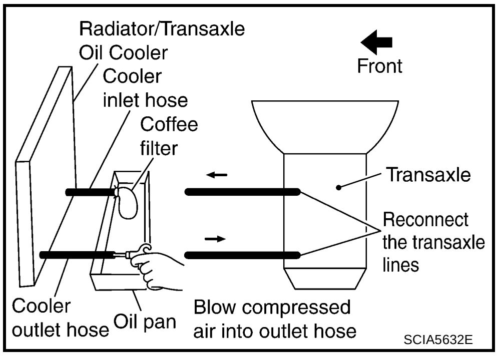

A/T FLUID COOLER INSPECTION PROCEDURE

1. Inspect the coffee filter for debris.

a. If small metal debris less than 1mm (0.040 in) in size or metal powder is found in the coffee filter, this is normal. If normal debris is found, the A/T fluid cooler/radiator can be re-used and the procedure is ended.

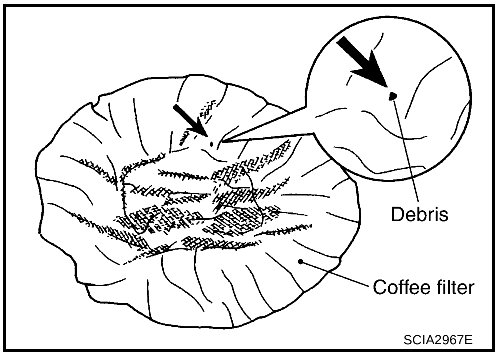

b. If one or more pieces of debris are found that are over 1mm (0.040 in) in size and/or peeled clutch facing material is found in the coffee filter, the A/T fluid cooler is not serviceable. The A/T fluid cooler/radiator must be replaced and the inspection procedure is ended. Refer to CO-11, "RADIATOR" .

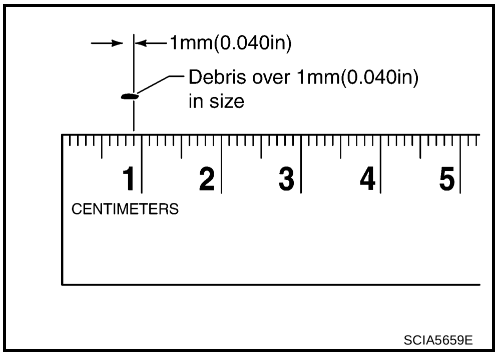

A/T FLUID COOLER FINAL INSPECTION

After performing all procedures, ensure that all remaining oil is cleaned from all components.

A/T CONTROL SYSTEM

PFP:31036

Cross-sectional View

ACS007JH

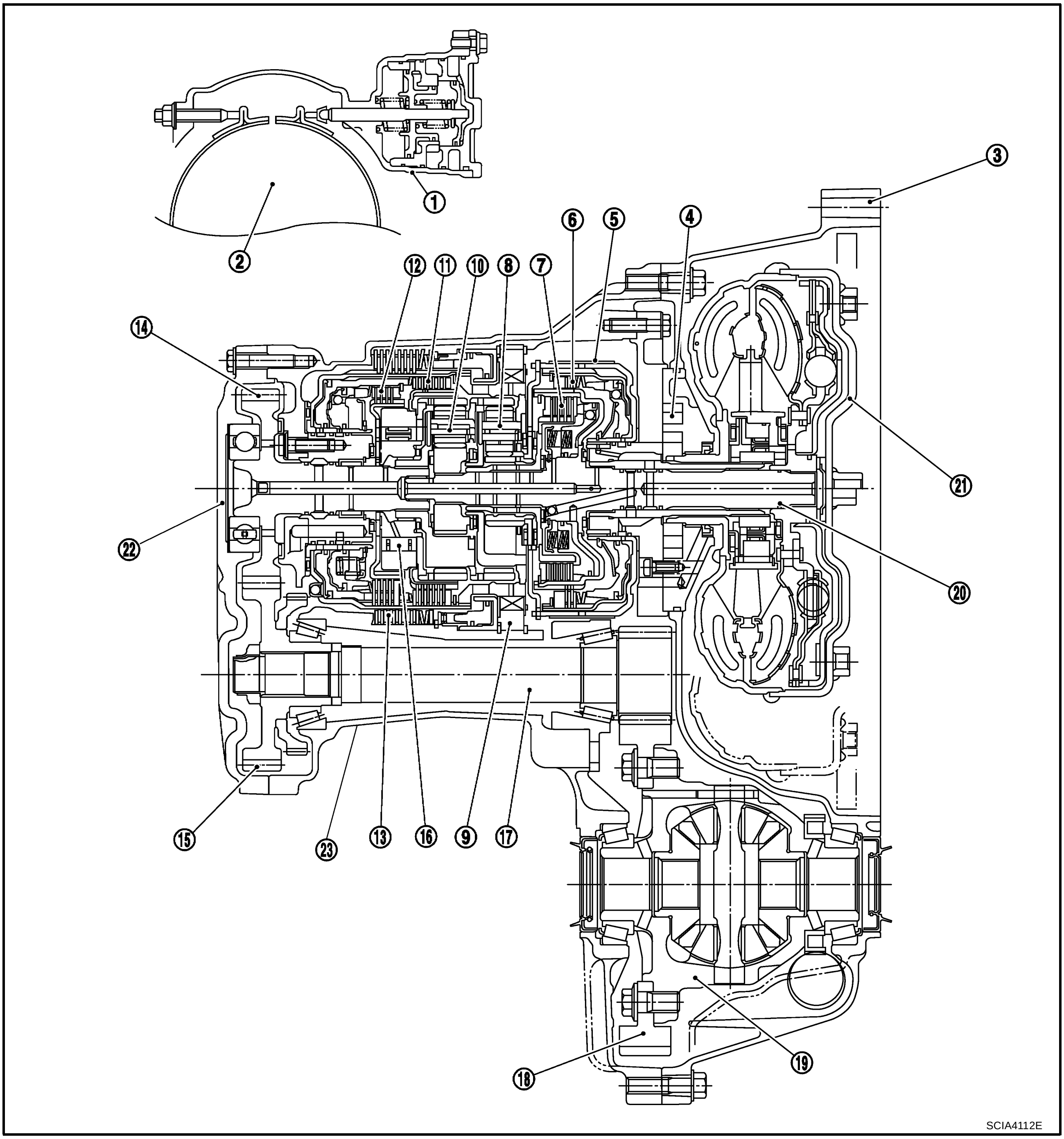

1.	Band servo piston assembly	2.	Reverse clutch drum	3.	Converter housing
4.	Oil pump	5.	Brake band	6.	Reverse clutch
7.	High clutch	8.	Front planetary gear	9.	Low one-way clutch
10.	Rear planetary gear	11.	Forward clutch	12.	Overrun clutch
13.	Low & reverse brake	14.	Output gear	15.	Idler gear
16.	Forward one-way clutch	17.	Reduction pinion gear	18.	Final gear
19.	Differential case	20.	Input shaft	21.	Torque converter
22.	Side cover	23.	Transaxle case		

Shift Mechanism

ACS007JI

CONSTRUCTION

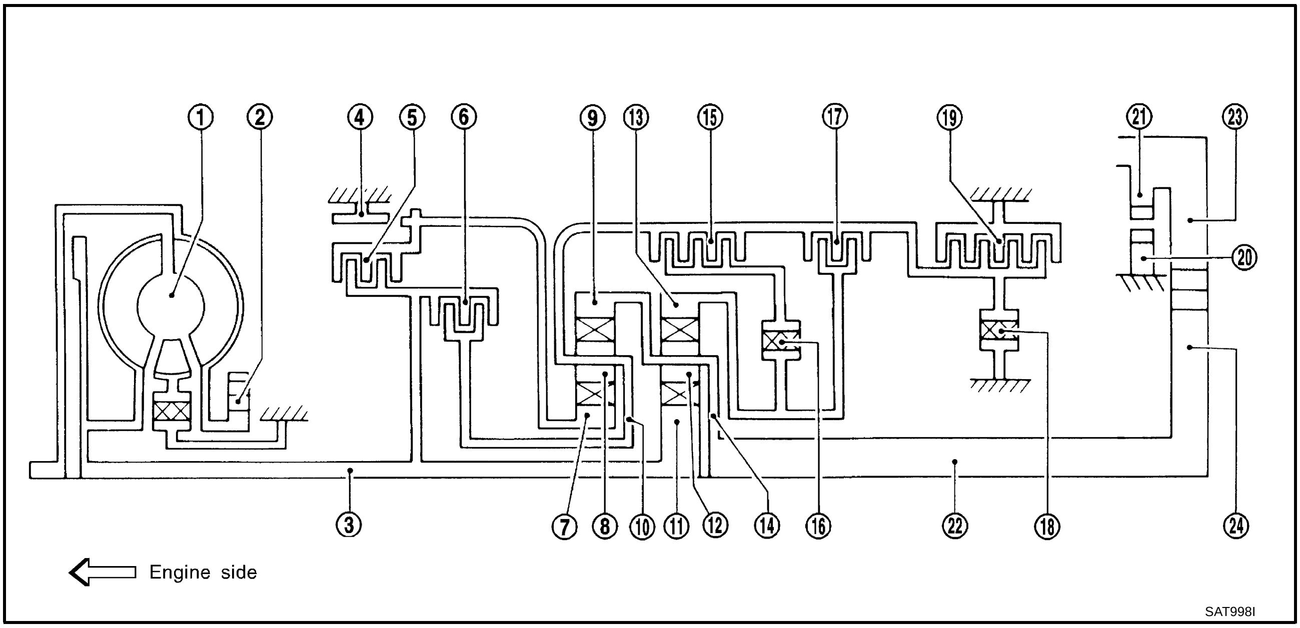

1. Torque converter	2. Oil pump	3. Input shaft
4. Brake band	5. Reverse clutch	6. High clutch
7. Front sun gear	8. Front pinion gear	9. Front internal gear
10. Front planetary carrier	11. Rear sun gear	12. Rear pinion gear
13. Rear internal gear	14. Rear planetary carrier	15. Forward clutch
16. Forward one-way clutch	17. Overrun clutch	18. Low one-way clutch
19. Low & reverse brake	20. Parking pawl	21. Parking gear
22. Output shaft	23. Idler gear	24. Output gear

FUNCTION OF CLUTCH AND BRAKE

Clutch and brake components		Abbr.	Function
5	Reverse clutch	R/C	To transmit input power to front sun gear **7** .
6	High clutch	H/C	To transmit input power to front planetary carrier **10** .
15	Forward clutch	F/C	To connect front planetary carrier **10** with forward one-way clutch **16** .
17	Overrun clutch	O/C	To connect front planetary carrier **10** with rear internal gear **13** .
4	Brake band	B/B	To lock front sun gear **7** .
16	Forward one-way clutch	F/O.C	When forward clutch **15** is engaged, to stop rear internal gear **13** from rotating in opposite direction against engine revolution.
18	Low one-way clutch	L/O.C	To stop front planetary carrier **10** from rotating in opposite direction against engine revolution.
19	Low & reverse brake	L & R/B	To lock front planetary carrier **10** .

CLUTCH AND BAND CHART

Shift position		R/C 5	H/C 6	F/C 15	O/C 17	Band servo: 2nd apply	Band servo: 3rd release	Band servo: 4th apply	F/O.C 16	L/O.C 18	L&R/B 19	Lock-up	Remarks
P													PARK POSITION
R		○									○		REVERSE POSITION
N													NEUTRAL POSITION
D*4	1st			○	*1D				B	B			Automatic shift 1 ⇔ 2 ⇔ 3 ⇔ 4
	2nd			○	*1A	○			B				
	3rd		○	○	*1A	*2C	C		B			*1○	
	4th		○	C		*3C	C	○				○	
2	1st			○	○				B	B			Automatic shift 1 ⇔ 2 ⇐ 3
	2nd			○	○	○			B				
	3rd		○	○	○	*2C	C		B				
1	1st			○	○				B	B	○		Locks (held stationary) in 1st speed 1 ⇐ 2 ⇐ 3
	2nd			○	○	○			B				
	3rd		○	○	○	*2C	C		B				

- *1: Operates when OD OFF. (OD OFF indicator lamp is on.)
- *2: Oil pressure is applied to both 2nd “apply” side and 3rd “release” side of band servo piston. However, brake band does not contract because oil pressure area on the “release” side is greater than that on the “apply” side.
- *3: Oil pressure is applied to 4th “apply” side in condition *2 above, and brake band contracts.
- *4: A/T will not shift to 4th when OD OFF. (OD OFF indicator lamp is on.)
- ○: Operates.
- A: Operates when throttle opening is less than 3/16, activating engine brake.
- B: Operates during “progressive” acceleration.
- C: Operates but does not affect power transmission.
- D: Operates when throttle opening is less than 3/16, but does not affect engine brake.

POWER TRANSMISSION

“N” and “P” Positions

- “N” position
  Power from the input shaft is not transmitted to the output shaft because the clutches do not operate.
- “P” position
  Similar to the “N” position, the clutches do not operate. The parking pawl engages with the parking gear to mechanically hold the output shaft so that the power train is locked.

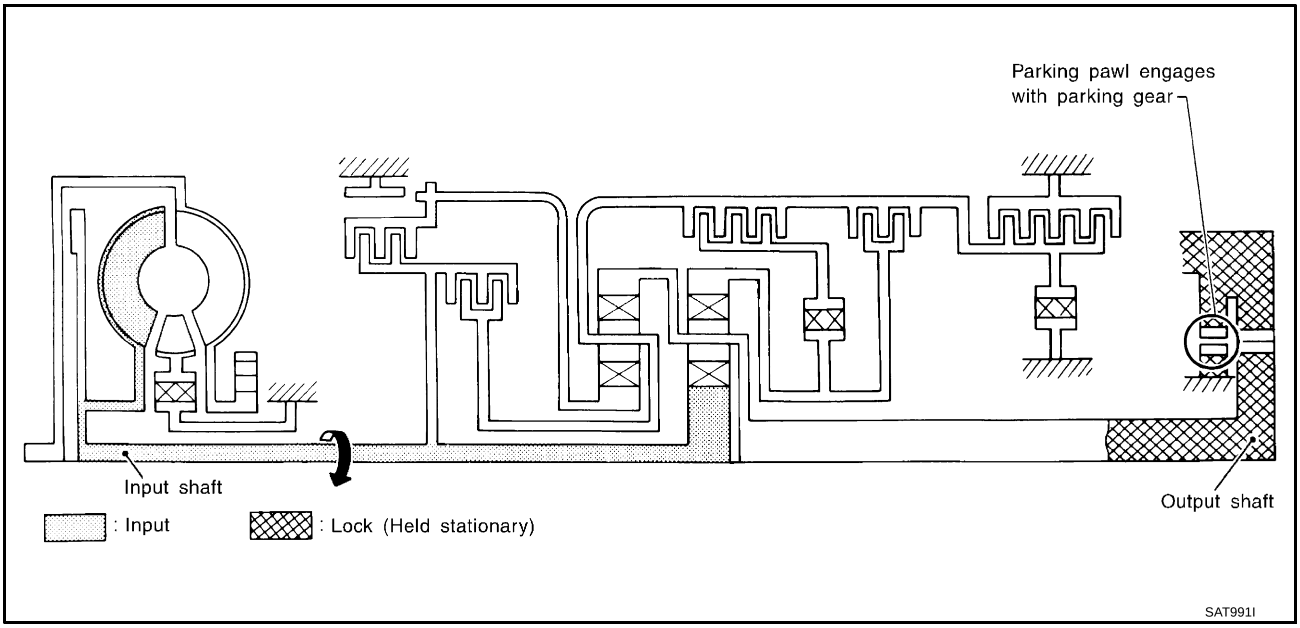

"1₁" Position

● **Forward clutch** ● **Forward one-way clutch** ● **Overrun clutch** ● **Low & reverse brake**	As overrun clutch engages, rear internal gear is locked by the operation of low and reverse brake. This is different from that of D1 and 21 .
Engine brake	Overrun clutch always engages, therefore engine brake can be obtained when decelerating.

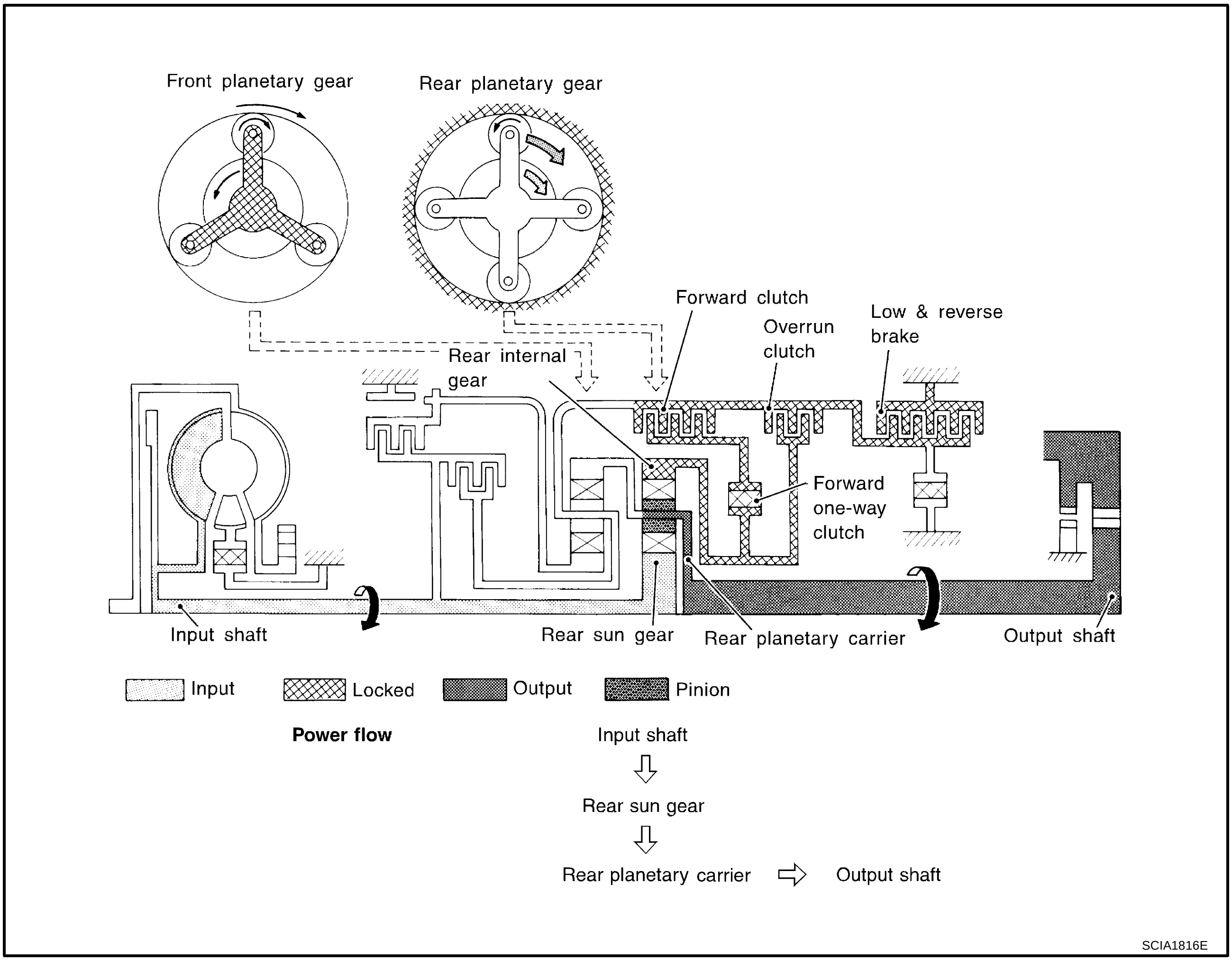

"D1 " and "21 " Positions

● **Forward one-way clutch** ● **Forward clutch** ● **Low one-way clutch**	Rear internal gear is locked to rotate counterclockwise because of the functioning of these three clutches.
Overrun clutch engagement conditions (Engine brake)	D1 : OD OFF (OD OFF indicator lamp is on) and throttle opening is less than 3/16 21 : Always engaged At D1 and 21 positions, engine brake is not activated due to free turning of low one-way clutch.

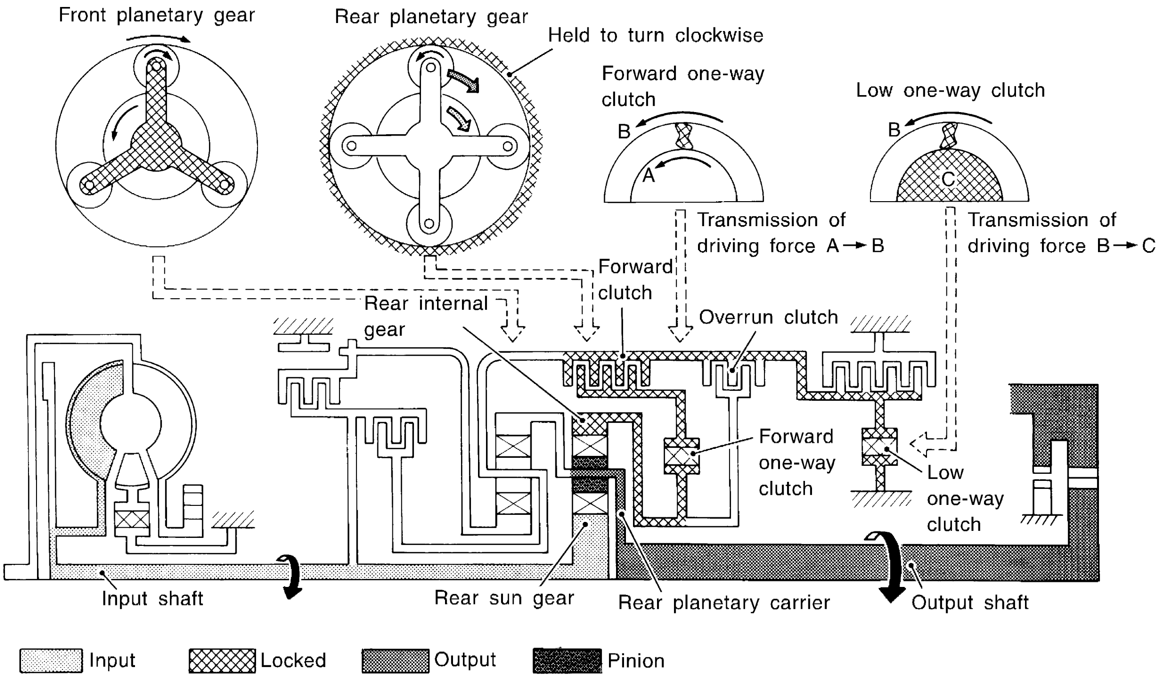

Power flow

Input shaft
⇩
Rear sun gear
⇩
Rear pinion gear
⇩
Rear planetary carrier → Output shaft

SAT377J

"D2 ", "22 " and "12 " Positions

● **Forward clutch** ● **Forward one-way clutch** ● **Brake band**	Rear sun gear drives rear planetary carrier and combined front internal gear. Front internal gear now rotates around front sun gear accompanying front planetary carrier. As front planetary carrier transfers the power to rear internal gear through forward clutch and forward one-way clutch, this rotation of rear internal gear increases the speed of rear planetary carrier compared with that of the 1st speed.
Overrun clutch engagement conditions	D2 : OD OFF (OD OFF indicator lamp is on) and throttle opening is less than 3/16 22 and 12 : Always engaged

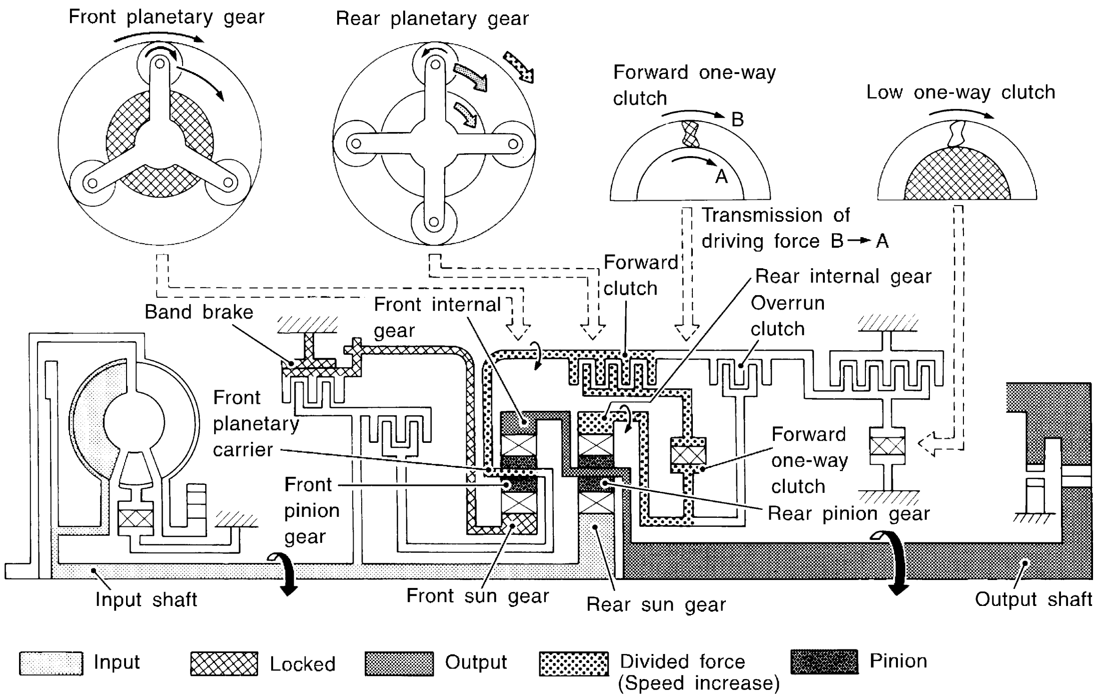

Power flow

Input shaft ⇨ Rear sun gear

Front internal gear → ⇩

[Rear planetary carrier / Front internal gear] ⇨ Output shaft

⇩

Front planetary carrier

⇩

Rear internal gear (⇧ back to Front internal gear)

SAT378J

"D3 ", "23 " and "13 " Positions

• **High clutch** • **Forward clutch** • **Forward one-way clutch**	Input power is transmitted to front planetary carrier through high clutch. And front planetary carrier is connected to rear internal gear by operation of forward clutch and forward one-way clutch. This rear internal gear rotation and another input (the rear sun gear) accompany rear planetary carrier to turn at the same speed.
Overrun clutch engagement conditions	D3 : OD OFF (OD OFF indicator lamp is on) and throttle opening is less than 3/16 23 and 13 : Always engaged

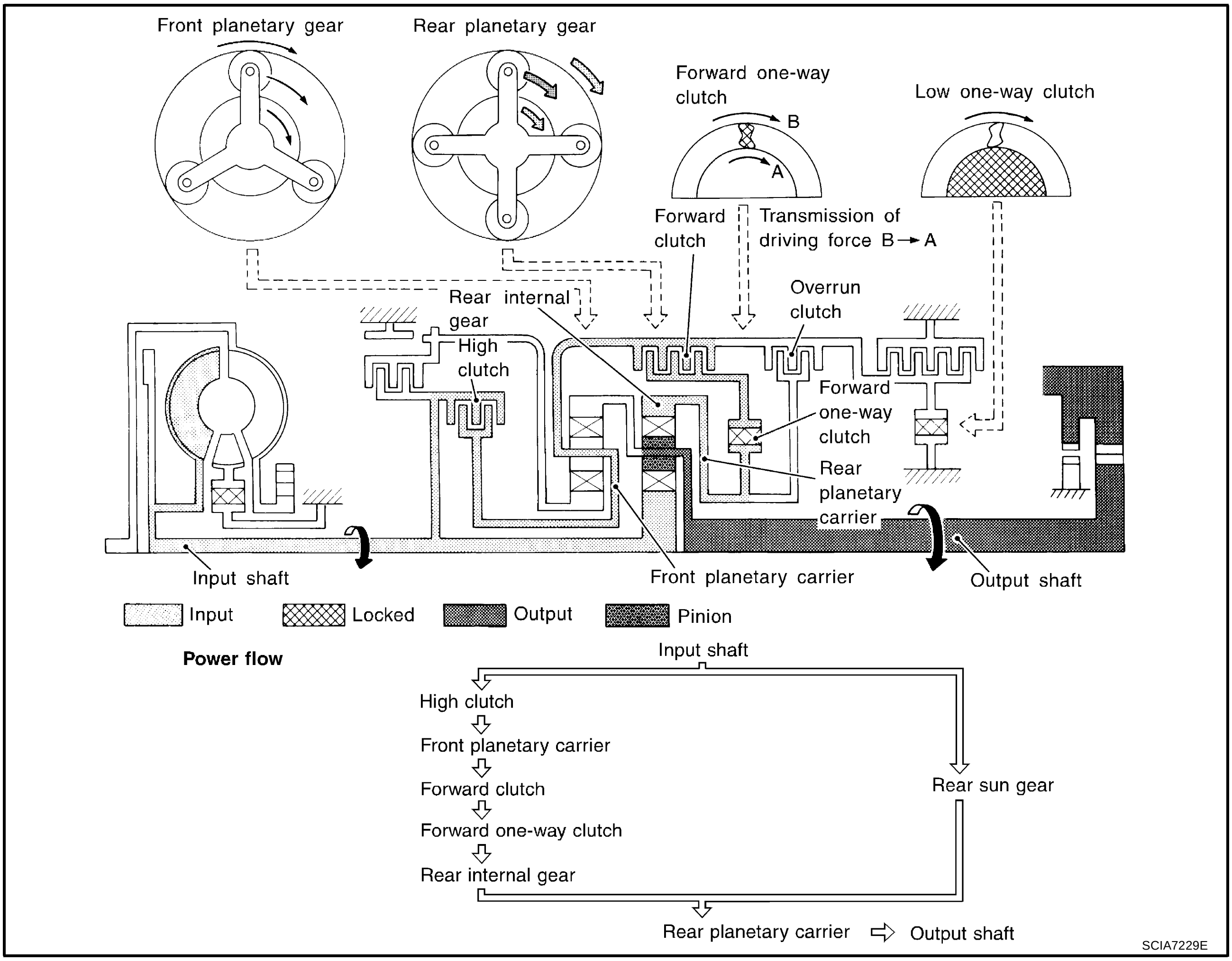

"D4 " (OD) Position

● **High clutch** ● **Brake band** ● **Forward clutch** (Does not affect power transmission)	Input power is transmitted to front carrier through high clutch. This front carrier turns around the sun gear which is fixed by brake band and makes front internal gear (output) turn faster.
Engine brake	At D4 position, there is no one-way clutch in the power transaxle line and engine brake can be obtained when decelerating.

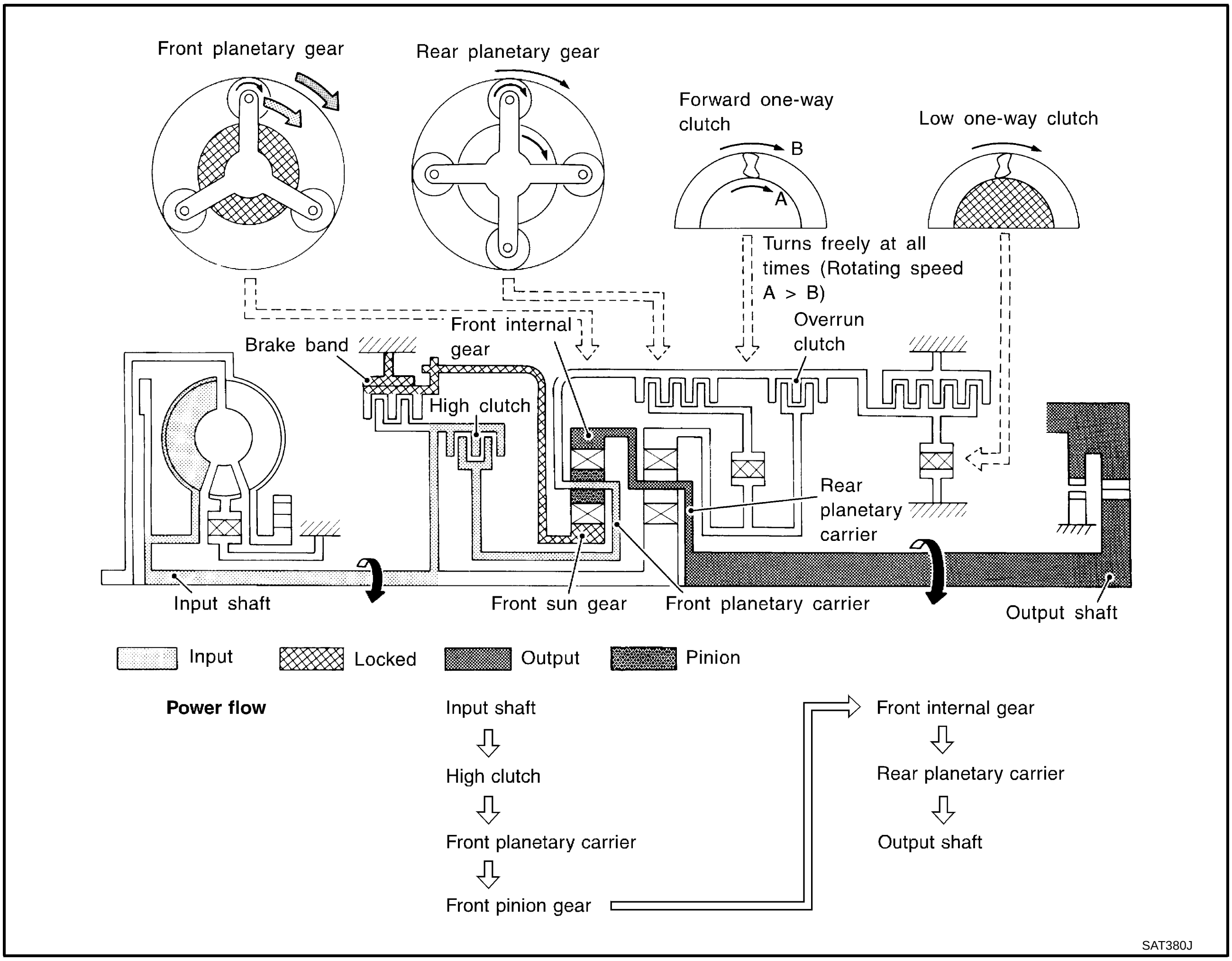

“R” Position

● **Reverse clutch** ● **Low & reverse brake**	Front planetary carrier is stationary because of the operation of low and reverse brake. Input power is transmitted to front sun gear through reverse clutch, which drives front internal gear in the opposite direction.
Engine brake	As there is no one-way clutch in the power transaxle line, engine brake can be obtained when decelerating.

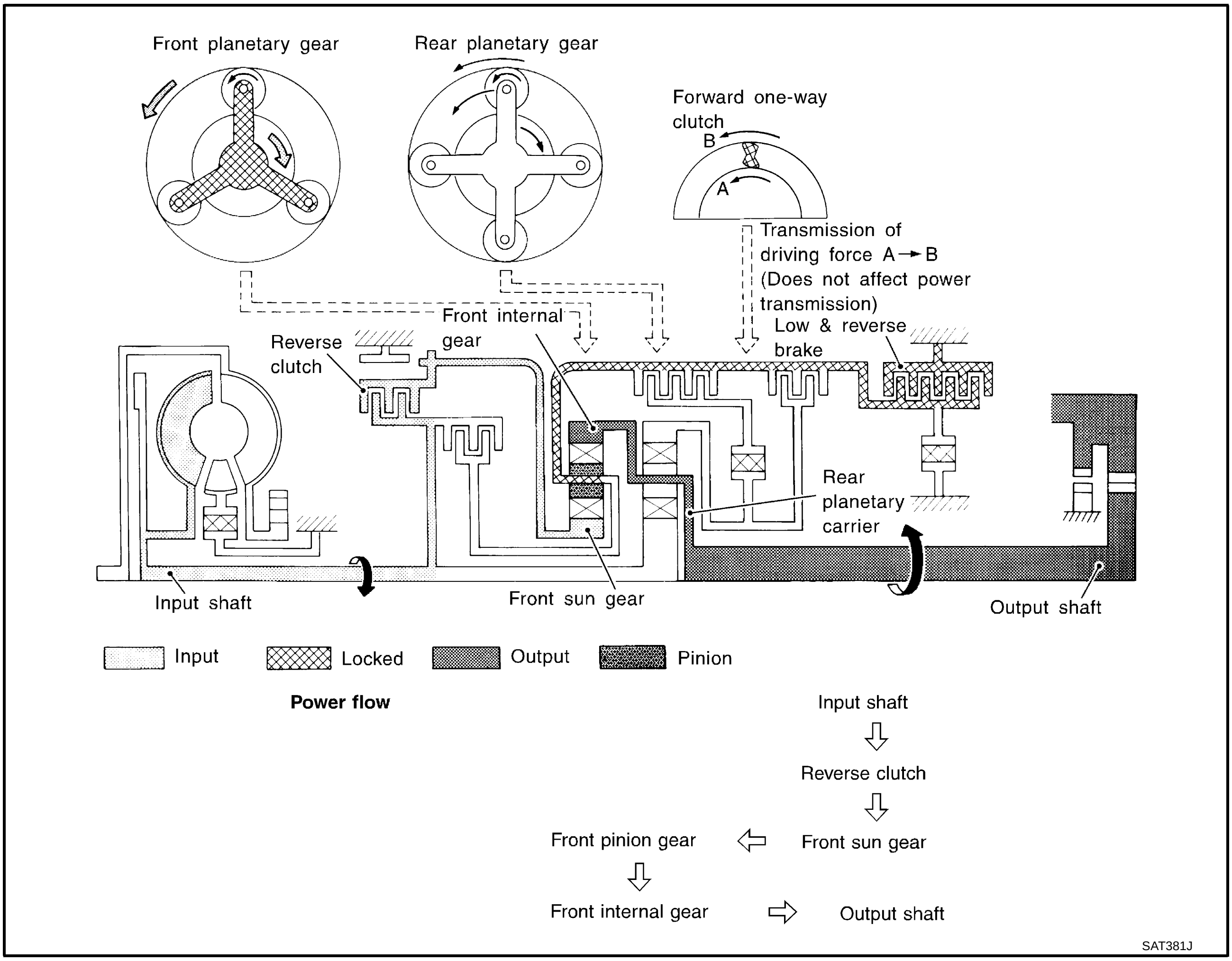

TCM Function

ACS007JJ

The function of the TCM is to:

- Receive input signals sent from various switches and sensors.
- Determine required line pressure, shifting point, lock-up operation, and engine brake operation.
- Send required output signals to the respective solenoids.

CONTROL SYSTEM OUTLINE

The automatic transmission senses vehicle operating conditions through various sensors or signals. It always controls the optimum shift position and reduces shifting and lock-up shocks.

SWITCHES & SENSORS		TCM		ACTUATORS
PNP switch Accelerator pedal position signal Closed throttle position signal Wide open throttle position signal Engine speed signal A/T fluid temperature sensor Revolution sensor Vehicle speed sensor Overdrive control switch signal Stop lamp switch signal	⇒	Shift control Line pressure control Lock-up control Overrun clutch control Timing control Fail-safe control Self-diagnosis CONSULT-II communication line control Duet-EU control	⇒	Shift solenoid valve A Shift solenoid valve B Overrun clutch solenoid valve Torque converter clutch solenoid valve Line pressure solenoid valve OD OFF indicator lamp

CONTROL SYSTEM DIAGRAM

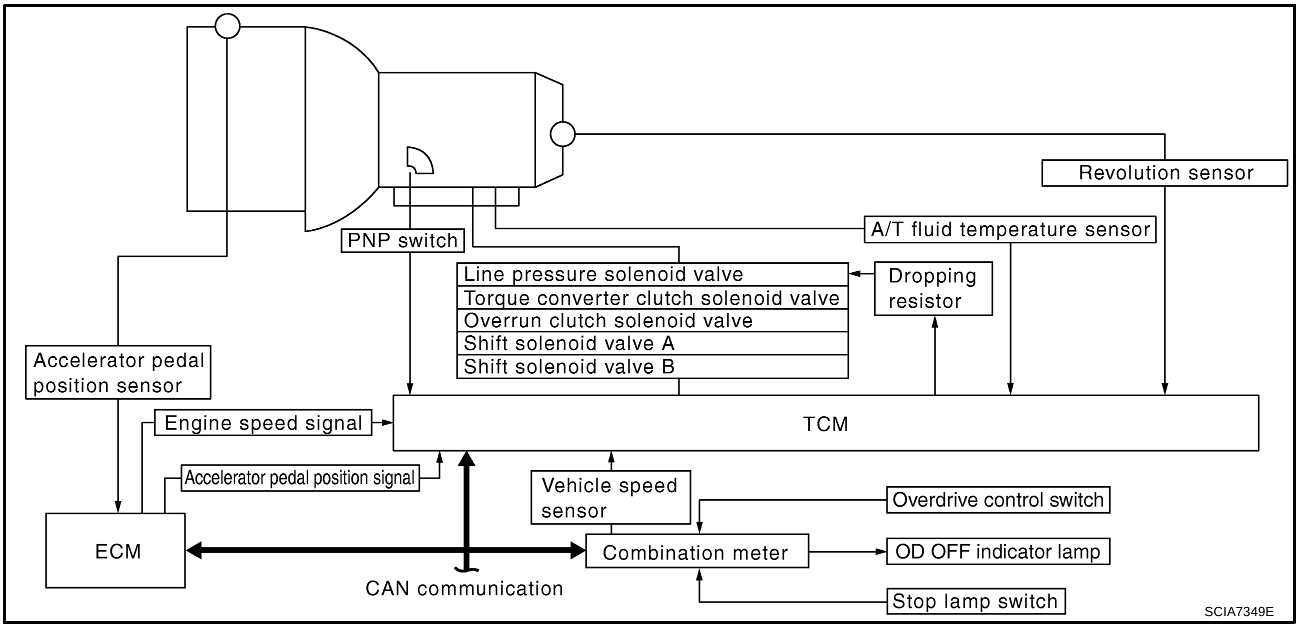

CAN Communication

ACS007JK

SYSTEM DESCRIPTION

CAN (Controller Area Network) is a serial communication line for real time application. It is an on-vehicle multiplex communication line with high data communication speed and excellent error detection ability. Many electronic control units are equipped onto a vehicle, and each control unit shares information and links with other control units during operation (not independent). In CAN communication, control units are connected with 2 communication lines (CAN H line, CAN L line) allowing a high rate of information transmission with less wiring. Each control unit transmits/receives data but selectively reads required data only. For details, refer to LAN-21, "CAN Communication Unit" .

Input/Output Signal of TCM

ACS007JL

Control item		Line pressure control	Vehicle speed control	Shift control	Lock-up control	Engine brake control	Fail-safe function (*3)	Self-diagnostics function
Input	Accelerator pedal position signal	X	X	X	X	X	X	X
	Vehicle speed sensor-A/T (Revolution sensor)	X	X	X	X		X	X
	Vehicle speed sensor-MTR(*1)	X	X	X	X			X
	Closed throttle position signal(*5)	(*2) X	(*2) X		X			(*4) X
	Wide open throttle position signal(*5)	(*2) X	(*2) X					(*4) X
	Engine speed signal				X			X
	PNP switch	X	X	X	X	X	X	(*4) X
	Stop lamp switch signal(*5)		X		X	X		(*4) X
	A/T fluid temperature sensors	X	X		X	X		X
	TCM power supply voltage signal	X						X
Out-put	Shift solenoid valve A/B		X				X	X
	Line pressure solenoid	X					X	X
	Torque converter clutch solenoid valve				X		X	X
	Overrun clutch solenoid valve		X			X	X	X
	OD OFF indicator lamp signal(*6)							X

*1: Spare for vehicle speed sensor·A/T (revolution sensor)
*2: Spare for accelerator pedal position signal
*3: If these input and output signals are different, the TCM triggers the fail-safe function.
*4: Used as a condition for starting self-diagnostics; if self-diagnostics are not started, it is judged that there is some kind of error.
*5: Input by CAN communications.
*6: Output by CAN communications.

Line Pressure Control

ACS007JM

- TCM has various line pressure control characteristics to match the driving conditions.
- An ON-OFF duty signal is sent to the line pressure solenoid valve based on TCM characteristics.
- Hydraulic pressure on the clutch and brake is electronically controlled through the line pressure solenoid valve to accommodate engine torque. This results in smooth shift operation.

NORMAL CONTROL

The characteristics of line pressure to throttle opening.

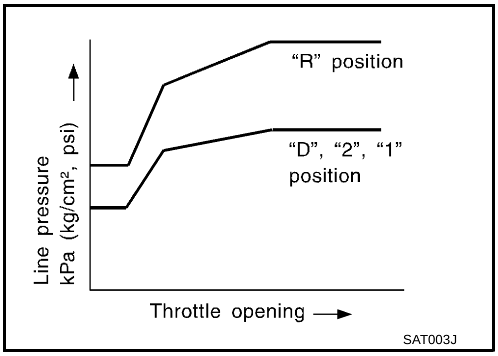

BACK-UP CONTROL (ENGINE BRAKE)

If the selector lever is shifted to "2" position while driving in D4 , D3 great driving force is applied to the clutch inside the transaxle. Clutch operating pressure (line pressure) must be increased to deal with this driving force.

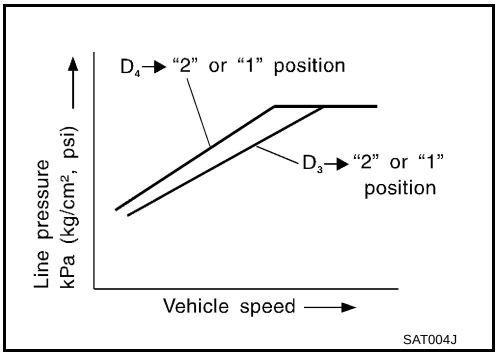

DURING SHIFT CHANGE

The line pressure is temporarily reduced corresponding to a change in engine torque when shifting gears (that is, when the shift solenoid valve is switched for clutch operation) to reduce shifting shock.

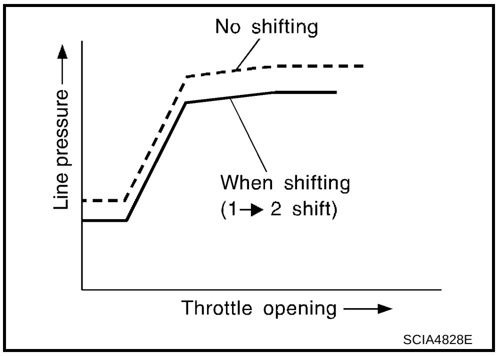

AT LOW FLUID TEMPERATURE

- Fluid viscosity and frictional characteristics of the clutch facing change with fluid temperature. Clutch engaging or band-contacting pressure is compensated for, according to fluid temperature, to stabilize shifting quality.
- The line pressure is reduced below 60°C (140°F) to prevent shifting shock due to low viscosity of A/T fluid when temperature is low.

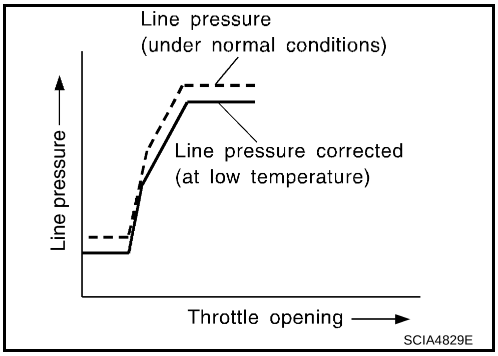

SCIA4829E

- Line pressure is increased to a maximum irrespective of the throttle opening when fluid temperature drops to –10°C (14°F). This pressure rise is adopted to prevent a delay in clutch and brake operation due to extreme drop of fluid viscosity at low temperature.

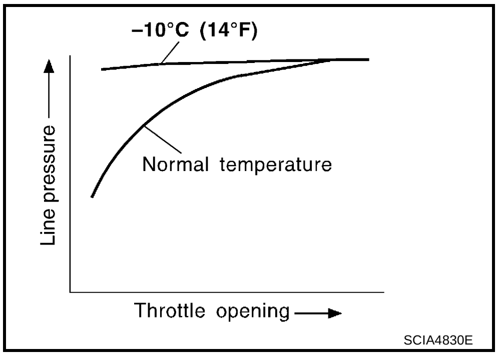

SCIA4830E

Shift Control

ACS007JN

The shift is regulated entirely by electronic control to accommodate vehicle speed and varying engine operations. This is accomplished by electrical signals transmitted by the revolution sensor and the ECM (accelerator pedal position sensor). This results in improved acceleration performance and fuel economy.

CONTROL OF SHIFT SOLENOID VALVES A AND B

The TCM activates shift solenoid valves A and B according to signals from the accelerator pedal position sensor and revolution sensor to select the optimum gear position on the basis of the shift schedule memorized in the TCM.
The shift solenoid valve performs simple ON-OFF operation. When set to “ON”, the drain circuit closes and pilot pressure is applied to the shift valve.

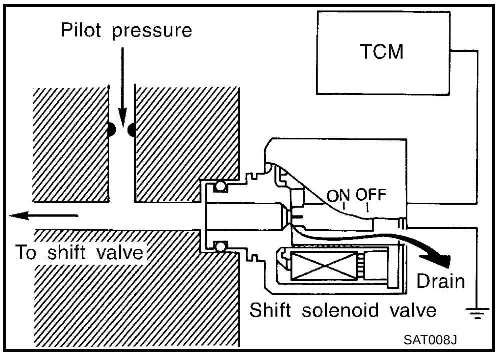

SAT008J

RELATION BETWEEN SHIFT SOLENOID VALVES A AND B AND GEAR POSITIONS

Gear position	1	2	3	4
Shift solenoid valve A	ON (Closed)	OFF (Open)	OFF (Open)	ON (Closed)
Shift solenoid valve B	ON (Closed)	ON (Closed)	OFF (Open)	OFF (Open)

CONTROL OF SHIFT VALVES A AND B

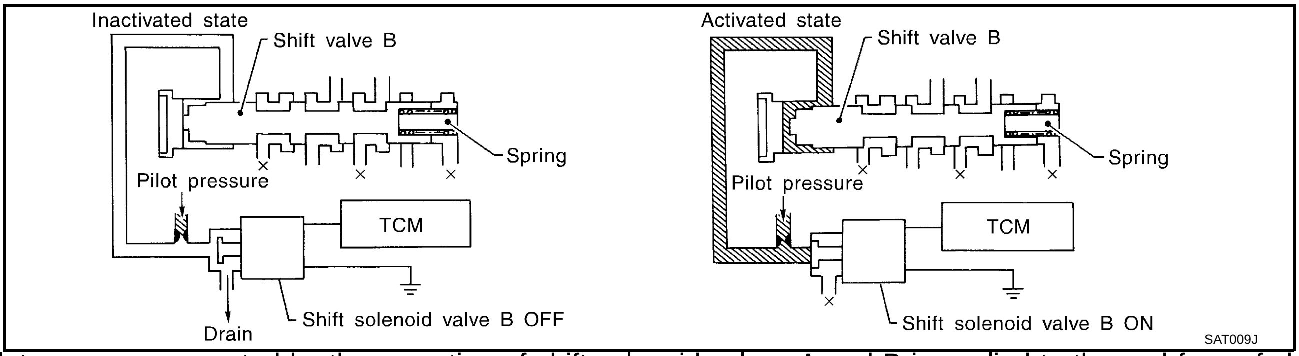

Pilot pressure generated by the operation of shift solenoid valves A and B is applied to the end face of shift valves A and B.

The figure above shows the operation of shift valve B. When the shift solenoid valve is “ON”, pilot pressure applied to the end face of the shift valve overcomes spring force, moving the valve upward.

Lock-up Control

ACS007JO

The torque converter clutch piston in the torque converter is locked to eliminate torque converter slip to increase power transmission efficiency. The solenoid valve is controlled by an ON-OFF duty signal sent from the TCM. The signal is converted to an oil pressure signal which controls the torque converter clutch piston.

CONDITIONS FOR LOCK-UP OPERATION

When vehicle is driven in 3rd and 4th gear positions, vehicle speed and throttle opening are detected. If the detected values fall within the lock-up zone memorized in the TCM, lock-up is performed.

OD	ON	OFF
Selector lever	“D” position	
Gear position	D_4	D_3
Vehicle speed sensor	More than set value	
Throttle position sensor	Less than set opening	
Closed throttle position switch	OFF	
A/T fluid temperature sensor	More than 40°C (104°F)	

TORQUE CONVERTER CLUTCH SOLENOID VALVE CONTROL

Lock-up Control System Diagram

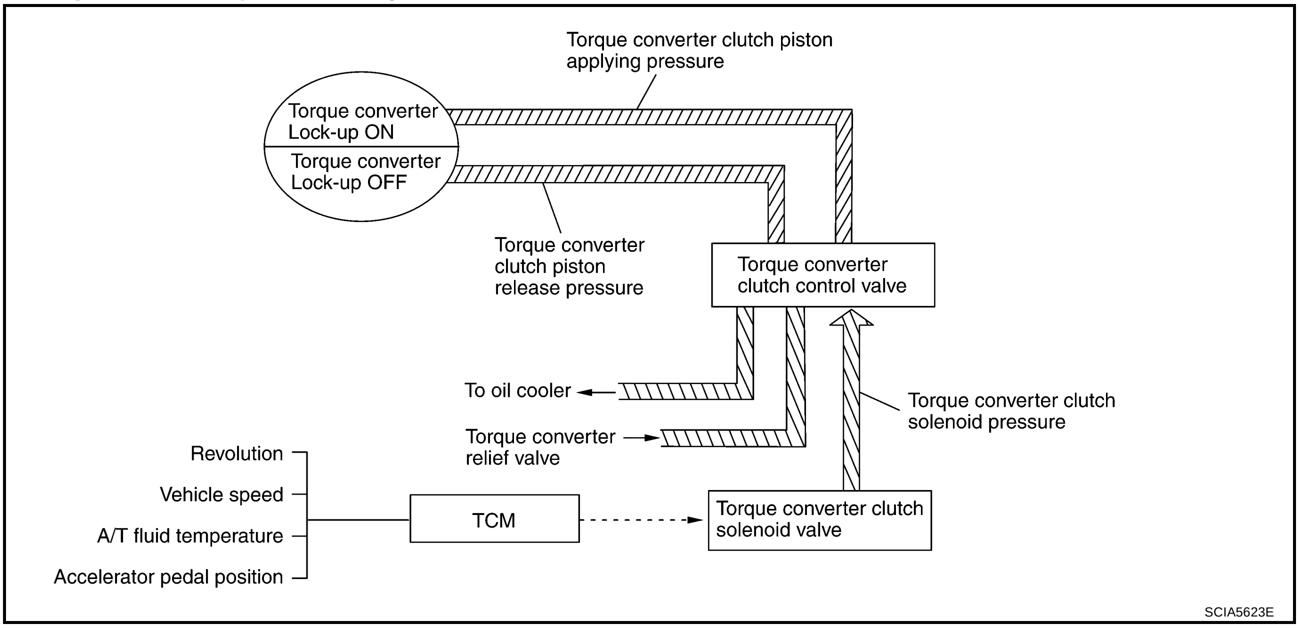

Lock-up Released

- In the lock-up released state, the torque converter clutch control valve is set into the unlocked state by draining the torque converter clutch piston applying pressure and the torque converter clutch piston release pressure is generated.
  In this way, the torque converter clutch piston is not coupled.

Lock-up Applied

- In the lock-up applied state, the torque converter clutch control valve is set into the locked state by generating the torque converter clutch piston applying pressure and the torque converter clutch piston release pressure is drained.
  In this way, the torque converter clutch piston is pressed and coupled.

SMOOTH LOCK-UP CONTROL

When shifting from the lock-up released state to the lock-up applied state, the current output to the torque converter clutch solenoid is controlled with the TCM. In this way, when shifting to the lock-up applied state, the torque converter clutch is temporarily set to the half-clutched state to reduce the shock.

Half-clutched State

- The current output from the TCM to the torque converter clutch solenoid is varied to steadily increase the torque converter clutch solenoid pressure.
  In this way, the lock-up applying pressure gradually rises and while the torque converter clutch piston is put into half-clutched status, the torque converter clutch piston applying pressure is increased and the coupling is completed smoothly.

Engine Brake Control (Overrun Clutch Control)

ACS007JP

Forward one-way clutch is used to reduce shifting shocks in downshifting operations. This clutch transmits engine torque to the wheels. However, drive force from the wheels is not transmitted to the engine because the one-way clutch rotates idle. This means the engine brake is not effective.
The overrun clutch operates when the engine brake is needed.

OVERRUN CLUTCH OPERATING CONDITIONS

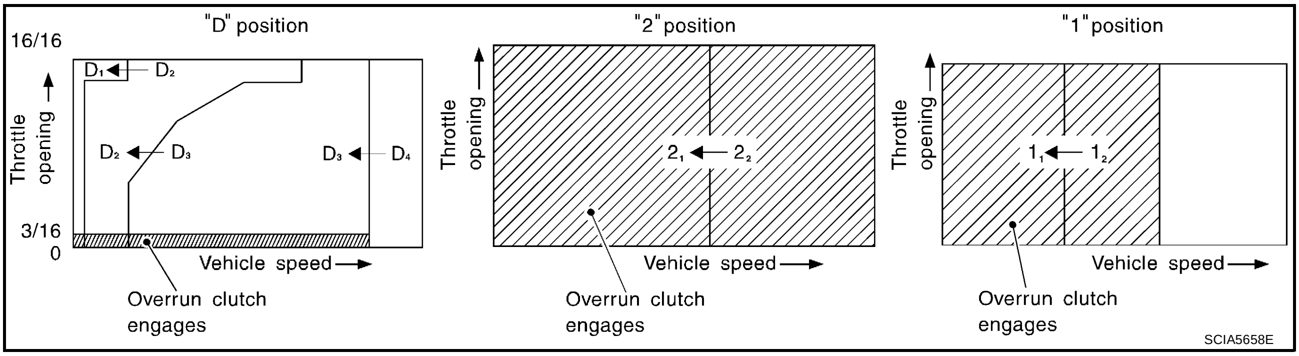

Selector lever position	Gear position	Throttle opening
"D" position	D1 , D2 , D3 gear position	Less than 3/16
"2" position	21 , 22 gear position	At any position
"1" position	11 , 12 gear position	

OVERRUN CLUTCH SOLENOID VALVE CONTROL

The overrun clutch solenoid valve is operated by an ON-OFF signal transmitted by the TCM to provide overrun clutch control (engine brake control).
When this solenoid valve is “ON”, the pilot pressure drain port closes. When it is “OFF”, the drain port opens.
During the solenoid valve “ON” pilot pressure is applied to the end face of the overrun clutch control valve.

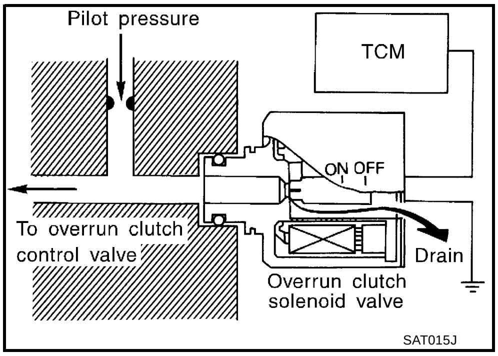

OVERRUN CLUTCH CONTROL VALVE OPERATION

When the solenoid valve is “ON”, pilot pressure is applied to the overrun clutch control valve. This pushes up the overrun clutch control valve. The line pressure is then shut off so that the clutch does not engage.
When the solenoid valve is “OFF”, pilot pressure is not generated. At this point, the overrun clutch control valve moves downward by spring force. As a result, overrun clutch operation pressure is provided by the overrun clutch reducing valve. This causes the overrun clutch to engage.
In the “2” and “1” positions, the overrun clutch control valve remains pushed down so that the overrun clutch is engaged at all times.

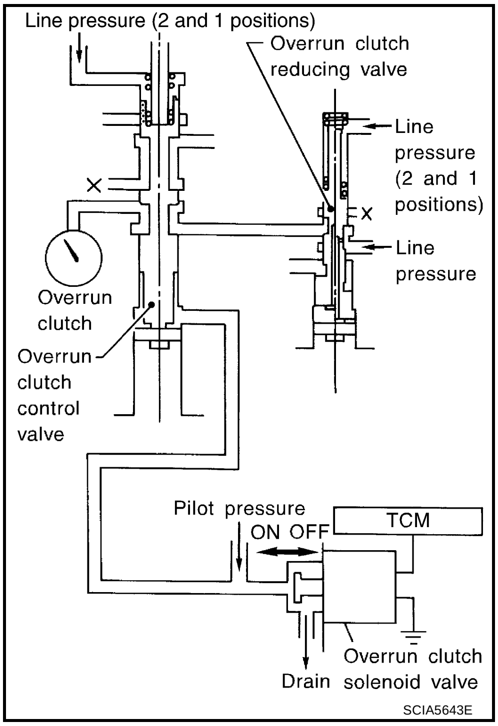

Control Valve

ACS007JQ

FUNCTION OF CONTROL VALVES

Valve name	Function
Pressure regulator valve, plug and sleeve plug	Regulates oil discharged from the oil pump to provide optimum line pressure for all driving conditions.
Pressure modifier valve and sleeve	Used as a signal supplementary valve to the pressure regulator valve. Regulates pressure-modifier pressure (signal pressure) which controls optimum line pressure for all driving conditions.
Pilot valve	Regulates line pressure to maintain a constant pilot pressure level which controls lock-up mechanism, overrun clutch, shift timing.
Accumulator control valve	Regulates accumulator back-pressure to pressure suited to driving conditions.
Manual valve	Directs line pressure to oil circuits corresponding to select positions. Hydraulic pressure drains when the shift lever is in Neutral.
Shift valve A	Simultaneously switches three oil circuits using output pressure of shift solenoid valve A to meet driving conditions (vehicle speed, throttle opening, etc.). Provides automatic downshifting and upshifting (1st → 2nd → 3rd → 4th gears/4th → 3rd → 2nd → 1st gears) in combination with shift valve B.
Shift valve B	Simultaneously switches two oil circuits using output pressure of shift solenoid valve B in relation to driving conditions (vehicle speed, throttle opening, etc.). Provides automatic downshifting and upshifting (1st → 2nd → 3rd → 4th gears/4th → 3rd → 2nd → 1st gears) in combination with shift valve A.
Overrun clutch control valve	Switches hydraulic circuits to prevent engagement of the overrun clutch simultaneously with application of the brake band in D_4 . (Interlocking occurs if the overrun clutch engages during D_4 .)
1st reducing valve	Reduces low & reverse brake pressure to dampen engine-brake shock when downshifting from the 1st position 1_2 to 1_1 .
Overrun clutch reducing valve	Reduces oil pressure directed to the overrun clutch and prevents engine-brake shock. In the 1st and 2nd positions, line pressure acts on the overrun clutch reducing valve to increase the pressure-regulating point, with resultant engine brake capability.
Torque converter relief valve	Prevents an excessive rise in torque converter pressure.
Torque converter clutch control valve, plug and sleeve	Activates or inactivates the lock-up function. Also provides smooth lock-up through transient application and release of the lock-up system.
1-2 accumulator valve and piston	Lessens the shock find when the 2nd gear band servo contracts, and provides smooth shifting.
3-2 timing valve	Switches the pace that oil pressure is released depending on vehicle speed; maximizes the high clutch release timing, and allows for soft downshifting.
Shuttle valve	Determines if the overrun clutch solenoid valve should control the 3-2 timing valve or the overrun clutch control valve and switches between the two.
Cooler check valve	At low speeds and with a small load when a little heat is generated, saves the volume of cooler flow, and stores the oil pressure for lock-up.

ON BOARD DIAGNOSTIC (OBD) SYSTEM

PFP:00028

Introduction

ACS007QU

A/T system has two self-diagnostic systems.
The first is emission-related on board diagnostic system (OBD-II) performed by the TCM in combination with the ECM. The malfunction is indicated by the MIL (malfunction indicator lamp) and is stored as a DTC in the ECM memory but not the TCM memory.
The second is the TCM original self-diagnosis indicated by the OD OFF indicator lamp. The malfunction is stored in the TCM memory. The detected items are overlapped with OBD-II self-diagnostic items. For detail, refer to AT-81, "SELF-DIAGNOSTIC RESULT MODE" .

OBD-II Function for A/T System

ACS007QV

The ECM provides emission-related on board diagnostic (OBD-II) functions for the A/T system. One function is to receive a signal from the TCM used with OBD-related parts of the A/T system. The signal is sent to the ECM when a malfunction occurs in the corresponding OBD-related part. The other function is to indicate a diagnostic result by means of the MIL (malfunction indicator lamp) on the instrument panel. Sensors, switches and solenoid valves are used as sensing elements.
The MIL automatically illuminates in One or Two Trip Detection Logic when a malfunction is sensed in relation to A/T system parts.

One or Two Trip Detection Logic of OBD-II

ACS007QW

ONE TRIP DETECTION LOGIC

If a malfunction is sensed during the first test drive, the MIL will illuminate and the malfunction will be stored in the ECM memory as a DTC. The TCM is not provided with such a memory function.

TWO TRIP DETECTION LOGIC

When a malfunction is sensed during the first test drive, it is stored in the ECM memory as a 1st trip DTC (diagnostic trouble code) or 1st trip freeze frame data. At this point, the MIL will not illuminate. — 1st trip
If the same malfunction as that experienced during the first test drive is sensed during the second test drive, the MIL will illuminate. — 2nd trip
The “trip” in the “One or Two Trip Detection Logic” means a driving mode in which self-diagnosis is performed during vehicle operation.

OBD-II Diagnostic Trouble Code (DTC)

ACS007QX

HOW TO READ DTC AND 1ST TRIP DTC

DTC and 1st trip DTC can be read by the following methods.
(with CONSULT-II or GST) CONSULT-II or GST (Generic Scan Tool) Examples: P0705, P0720 etc.
These DTC are prescribed by SAE J2012.
(CONSULT-II also displays the malfunctioning component or system.)

- **1st trip DTC No. is the same as DTC No.**
- **Output of the diagnostic trouble code indicates that the indicated circuit has a malfunction. However, in case of the Mode II and GST, they do not indicate whether the malfunction is still occurring or occurred in the past and returned to normal.**
  CONSULT-II can identify them as shown below, therefore, CONSULT-II (if available) is recommended.

A sample of CONSULT-II display for DTC and 1st trip DTC is shown on the next page. DTC or 1st trip DTC of a malfunction is displayed in SELF-DIAGNOSTIC RESULTS mode for “ENGINE” with CONSULT-II. Time data indicates how many times the vehicle was driven after the last detection of a DTC.

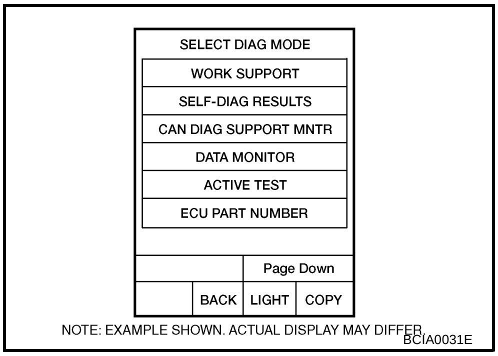

If the DTC is being detected currently, the time data will be “0”.

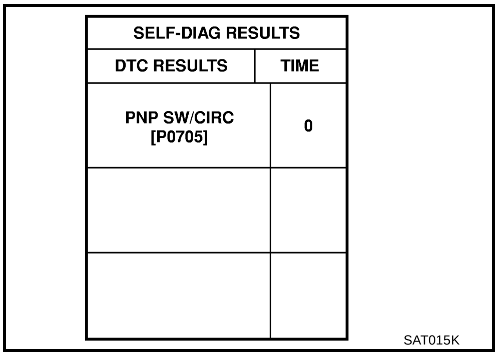

SAT015K

If a 1st trip DTC is stored in the ECM, the time data will be “1t”.

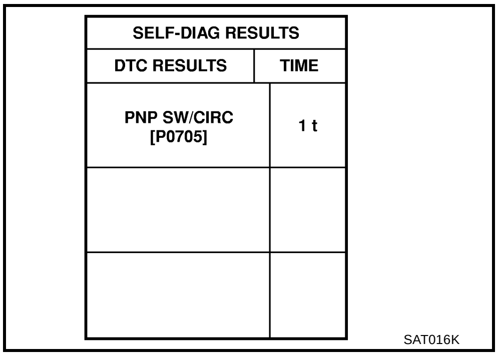

SAT016K

Freeze Frame Data and 1st Trip Freeze Frame Data

The ECM has a memory function, which stores the driving condition such as fuel system status, calculated load value, engine coolant temperature, short term fuel trim, long term fuel trim, engine speed and vehicle speed at the moment the ECM detects a malfunction.
Data which are stored in the ECM memory, along with the 1st trip DTC, are called 1st trip freeze frame data, and the data, stored together with the DTC data, are called freeze frame data and displayed on CONSULT-II or GST. The 1st trip freeze frame data can only be displayed on the CONSULT-II screen, not on the GST. For detail, refer to EC-112, "CONSULT-II Function (ENGINE)" .
Only one set of freeze frame data (either 1st trip freeze frame data of freeze frame data) can be stored in the ECM. 1st trip freeze frame data is stored in the ECM memory along with the 1st trip DTC. There is no priority for 1st trip freeze frame data and it is updated each time a different 1st trip DTC is detected. However, once freeze frame data (2nd trip detection/MIL on) is stored in the ECM memory, 1st trip freeze frame data is no longer stored. Remember, only one set of freeze frame data can be stored in the ECM. The ECM has the following priorities to update the data.

Priority	Items	
1	Freeze frame data	Misfire — DTC: P0300 - P0306 Fuel Injection System Function — DTC: P0171, P0172, P0174, P0175
2		Except the above items (Includes A/T related items)
3	1st trip freeze frame data	

Both 1st trip freeze frame data and freeze frame data (along with the DTC) are cleared when the ECM memory is erased.

HOW TO ERASE DTC

The diagnostic trouble code can be erased by CONSULT-II, GST or ECM DIAGNOSTIC TEST MODE as described following.

- **If the battery cable is disconnected, the diagnostic trouble code will be lost within 24 hours.**
- **When you erase the DTC, using CONSULT-II or GST is easier and quicker than switching the mode selector on the ECM.**

The following emission-related diagnostic information is cleared from the ECM memory when erasing DTC related to OBD-II. For details, refer to EC-48, "Emission-Related Diagnostic Information" .

- **Diagnostic trouble codes (DTC)**
- **1st trip diagnostic trouble codes (1st trip DTC)**
- **Freeze frame data**

- **1st trip freeze frame data**
- **System readiness test (SRT) codes**
- **Test values**

HOW TO ERASE DTC (WITH CONSULT-II)

- **If a DTC is displayed for both ECM and TCM, it is necessary to be erased for both ECM and TCM.**

1. If the ignition switch stays ON after repair work, be sure to turn ignition switch OFF once. Wait at least 10 seconds and then turn it ON (engine stopped) again.
2. Turn CONSULT-II “ON” and touch “A/T”.
3. Touch “SELF-DIAG RESULTS”.
4. Touch “ERASE”. (The DTC in the TCM will be erased.) Then touch “BACK” twice.
5. Touch “ENGINE”.
6. Touch “SELF-DIAG RESULTS”.
7. Touch “ERASE”. (The DTC in the ECM will be erased.)

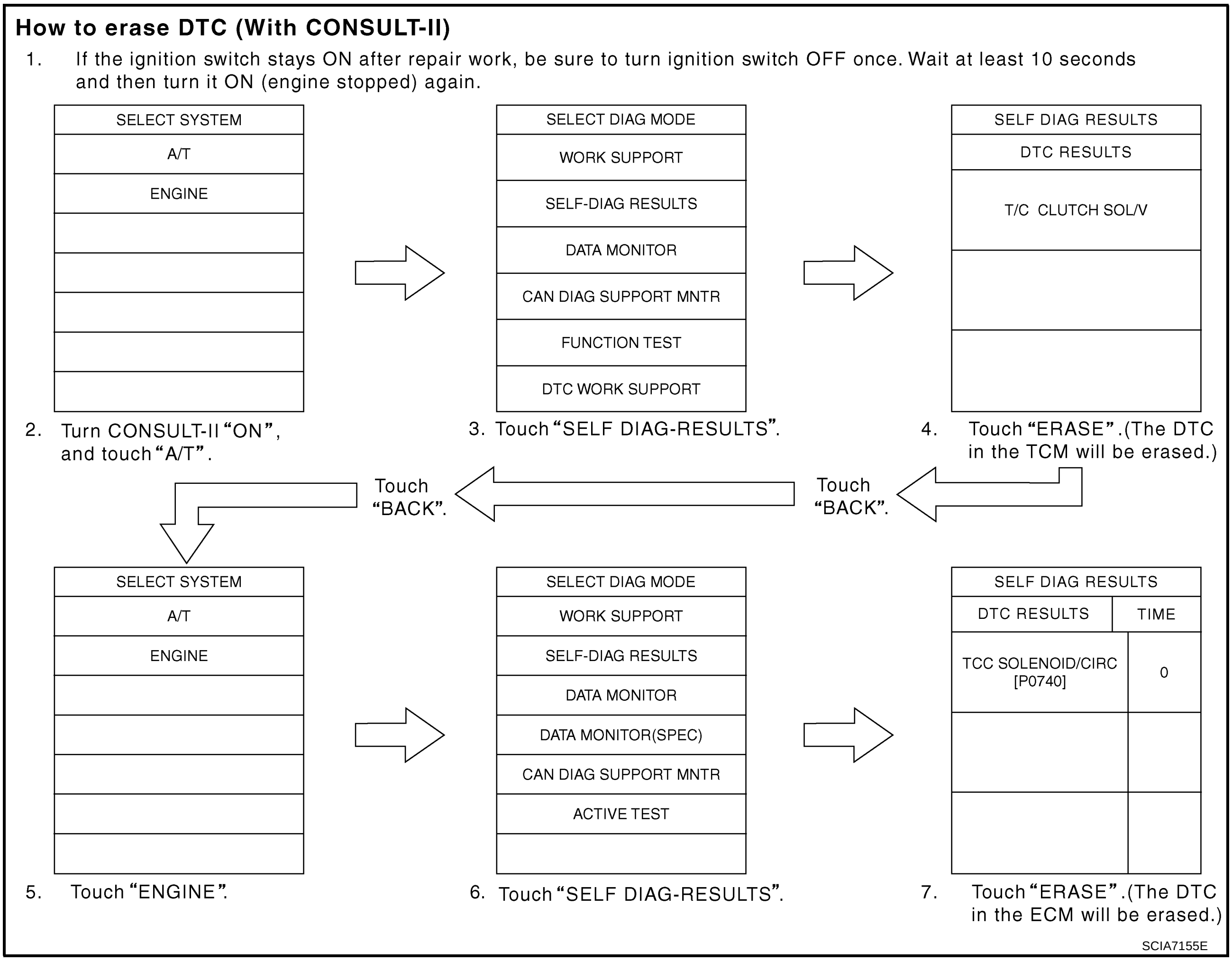

HOW TO ERASE DTC (WITH GST)

1. If the ignition switch stays ON after repair work, be sure to turn ignition switch OFF once. Wait at least 10 seconds and then turn it ON (engine stopped) again.
2. Perform “TCM SELF-DIAGNOSTIC PROCEDURE (No Tools)”. Refer to AT-89, "TCM SELF-DIAGNOSTIC PROCEDURE" . (The engine warm-up step can be skipped when performing the diagnosis only to erase the DTC.)
3. Select Mode 4 with Generic Scan Tool (GST). For details, refer to EC-125, "Generic Scan Tool (GST) Function" .

HOW TO ERASE DTC (NO TOOLS)

The OD OFF indicator lamp is located on the combination meter.

1. If the ignition switch stays ON after repair work, be sure to turn ignition switch OFF once. Wait at least 10 seconds and then turn it ON (engine stopped) again.
2. Perform "TCM SELF-DIAGNOSTIC PROCEDURE (No Tools)". Refer to AT-89, "TCM SELF-DIAGNOSTIC PROCEDURE" . (The engine warm-up step can be skipped when performing the diagnosis only to erase the DTC.)
3. Perform "OBD-II SELF-DIAGNOSTIC PROCEDURE (No tools)". Refer to EC-60, "How to Erase DTC" .

Malfunction Indicator Lamp (MIL)

ACS007QY

DESCRIPTION

The MIL is located on the instrument panel.

1. The MIL will light up when the ignition switch is turned ON without the engine running. This is a bulb check.
   - If the MIL does not light up, refer to DI-24, "WARNING LAMPS" , or see EC-657, "MIL AND DATA LINK CONNECTOR" .
2. When the engine is started, the MIL should go off.
   - If the MIL remains on, the on board diagnostic system has detected an engine system malfunction.

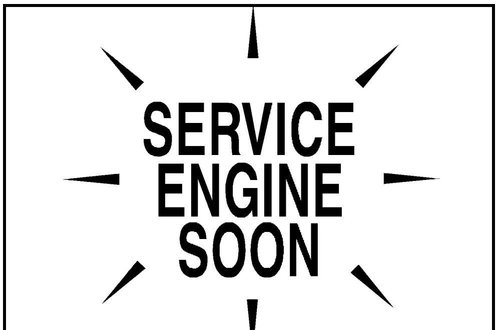

SEF217U

TROUBLE DIAGNOSIS

PFP:00004

DTC Inspection Priority Chart

ACS007JR

If some DTCs are displayed at the same time, perform inspections one by one based on the following priority chart.

NOTE:

If DTC "CAN COMM CIRCUIT" is displayed with other DTCs, first perform the trouble diagnosis for "DTC U1000 CAN COMM CIRCUIT". Refer to AT-93 .

Priority	Detected items
1	CAN communication line
2	Except above

Fail-safe

ACS008HS

The TCM has an electronic Fail-Safe (limp home mode). This allows the vehicle to be driven even if a major electrical input/output device circuit is damaged.

Under Fail-Safe, the vehicle always runs in third gear, even with a shift lever position of "1", "2" or "D". The customer may complain of sluggish or poor acceleration.

Always follow the "WORK FLOW", refer to AT-44, "WORK FLOW" .

The SELF-DIAGNOSIS results will be as follows:

- The first SELF-DIAGNOSIS will indicate damage to the vehicle speed sensor or the revolution sensor.
- During the next SELF-DIAGNOSIS, performed after checking the sensor, no damages will be indicated.

FAIL-SAFE FUNCTION

- The following fail-safe functions allow vehicles to be driven even when sensor, switch or solenoid malfunction occurs.

Vehicle Speed Sensor·A/T (Revolution Sensor)

- Vehicle speed sensor·MTR signal is input from combination meter.

Accelerator Pedal Position Sensor Signal

- If the accelerator pedal position sensor from ECM to TCM outputs an erratic signal, the control unit detects the throttle position by the closed throttle position signal and wide-open throttle position signal sent via the CAN communication from ECM.
  If an unexpected signal is sent from the accelerator pedal position sensor to ECM, ECM controls engine to maintain vehicle operation.

Closed throttle position signal	Wide open throttle position signal	Throttle position
–	ON	4/8
OFF	OFF	2/8
ON	OFF	0/8

PNP Switch

- When the multiple PNP switch signals are input to TCM, the priority of selector lever position becomes “D”, “N”, “R”, “2” and “1” in order by internal TCM determination.
  The use of 4th gear is inhibited until normal operation resumes. Because the hydraulic circuit of the control valve is switched by manual valve according to the selector lever position, however, actual operating condition of vehicle becomes as follows.

Actual lever position	PNP switch input signal	Running status
“P”	“P” position and other position signals	P
“R”	“R” position and other position signals	R
“N”	“N” position and other position signals	N
“D”	“D” position and other position signals	$D_1 \Leftrightarrow D_2 \Leftrightarrow D_3 \Leftrightarrow D_4$
“2”	“2” position and other position signals (Except “1” position)	$2_1 \Leftrightarrow 2_2 \Leftrightarrow 2_3$
	“2” position and “1” position signals	$2_1 \Leftrightarrow 2_2$
“1”	“1” position and other position signals (Except “2” position)	$1_1 \Leftrightarrow 1_2 \Leftrightarrow 1_3$
	“1” position and “2” position signals	$1_1 \Leftrightarrow 1_2$

Shift Solenoid Valve A and B

- If non-standard solenoid signal is sent to TCM, use of certain gears is limited. Refer to chart shown below.

Shift position	Normal			Malfunction in solenoid valve A			Malfunction in solenoid valve B			Malfunction in solenoid valves A and B		
	A	B	Gear	A	B	Gear	A	B	Gear	A	B	Gear
“D” position	●	●	1st	–	●→×		●→×	–		–	–	
	×	●	2nd	–	●→×		×	–		–	–	
	×	×	3rd	–	x		×	–		–	–	
	●	×	4th	–	x		●→×	–		–	–	
“2” position	●	●	1st	–	●→×		●→×	–		–	–	
	×	●	2nd	–	●→×	3rd	×	–	3rd	–	–	3rd
	×	×	3rd	–	x		×	–		–	–	
“1” position	●	●	1st	–	●→×		●→×	–		–	–	
	×	●	2nd	–	●→×		×	–		–	–	
	×	×	3rd	–	x		×	–		–	–	

●: Solenoid ON
×: Solenoid OFF
–: Non-standard condition

Line Pressure Solenoid Valve

- If non-standard solenoid signal is sent to TCM, line pressure solenoid valve is turned OFF to achieve maximum oil pressure.

Torque Converter Clutch Solenoid Valve

- If non-standard solenoid signal is sent to TCM, torque converter clutch solenoid valve is turned OFF to release lock-up.

Overrun Clutch Solenoid Valve

- If non-standard solenoid signal is sent to TCM, overrun clutch solenoid valve is turned OFF to engage overrun clutch. This will result in more effective engine brake during deceleration.

How to Perform Trouble Diagnoses for Quick and Accurate Repair

ACS007JT

INTRODUCTION

The TCM receives a signal from the vehicle speed sensor, accelerator pedal position sensor or PNP switch and provides shift control or lock-up control via A/T solenoid valves.

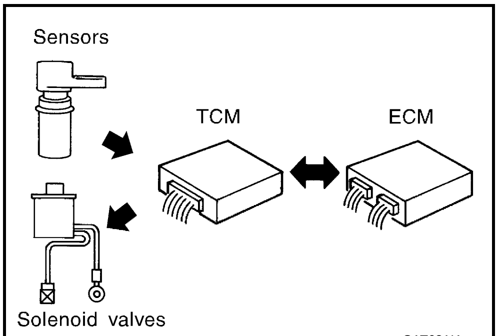

SAT631IA

Input and output signals must always be correct and stable in the operation of the A/T system. The A/T system must be in good operating condition and be free of valve seizure, solenoid valve malfunction, etc.

It is much more difficult to diagnose a malfunction that occurs intermittently rather than continuously. Most intermittent malfunctions are caused by poor electric connections or improper wiring. In this case, careful checking of suspected circuits may help prevent the replacement of good parts.

A visual check only, may not find the cause of the malfunctions. A road test with CONSULT-II or a circuit tester connected should be performed. Follow the AT-44, "WORK FLOW" .

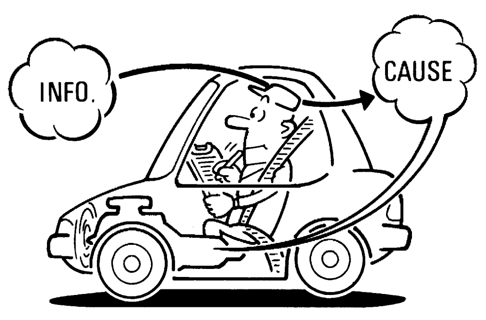

SAT632I

Before undertaking actual checks, take a few minutes to talk with a customer who approaches with a drivability complaint. The customer can supply good information about such malfunctions, especially intermittent ones. Find out what symptoms are present and under what conditions they occur. A “DIAGNOSTIC WORKSHEET” like the example (AT-46, "DIAGNOSTIC WORKSHEET") should be used.

Start your diagnosis by looking for “conventional” malfunctions first. This will help troubleshoot drivability malfunctions on an electronically controlled engine vehicle.

Also check related Service bulletins for information.

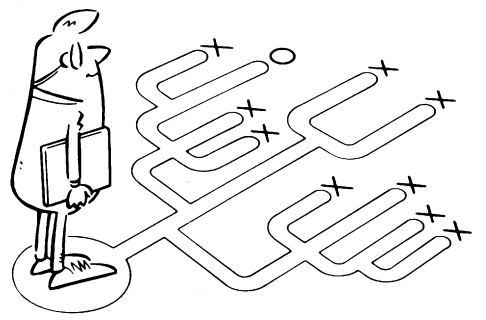
SEF234G

WORK FLOW

A good understanding of the malfunction conditions can make troubleshooting faster and more accurate. In general, each customer feels differently about a malfunction. It is important to fully understand the symptoms or conditions for a customer complaint.

Make good use of the two sheets provided, AT-46, "Information from Customer" and AT-47, "Diagnostic Worksheet" , to perform the best troubleshooting possible.

Work Flow Chart

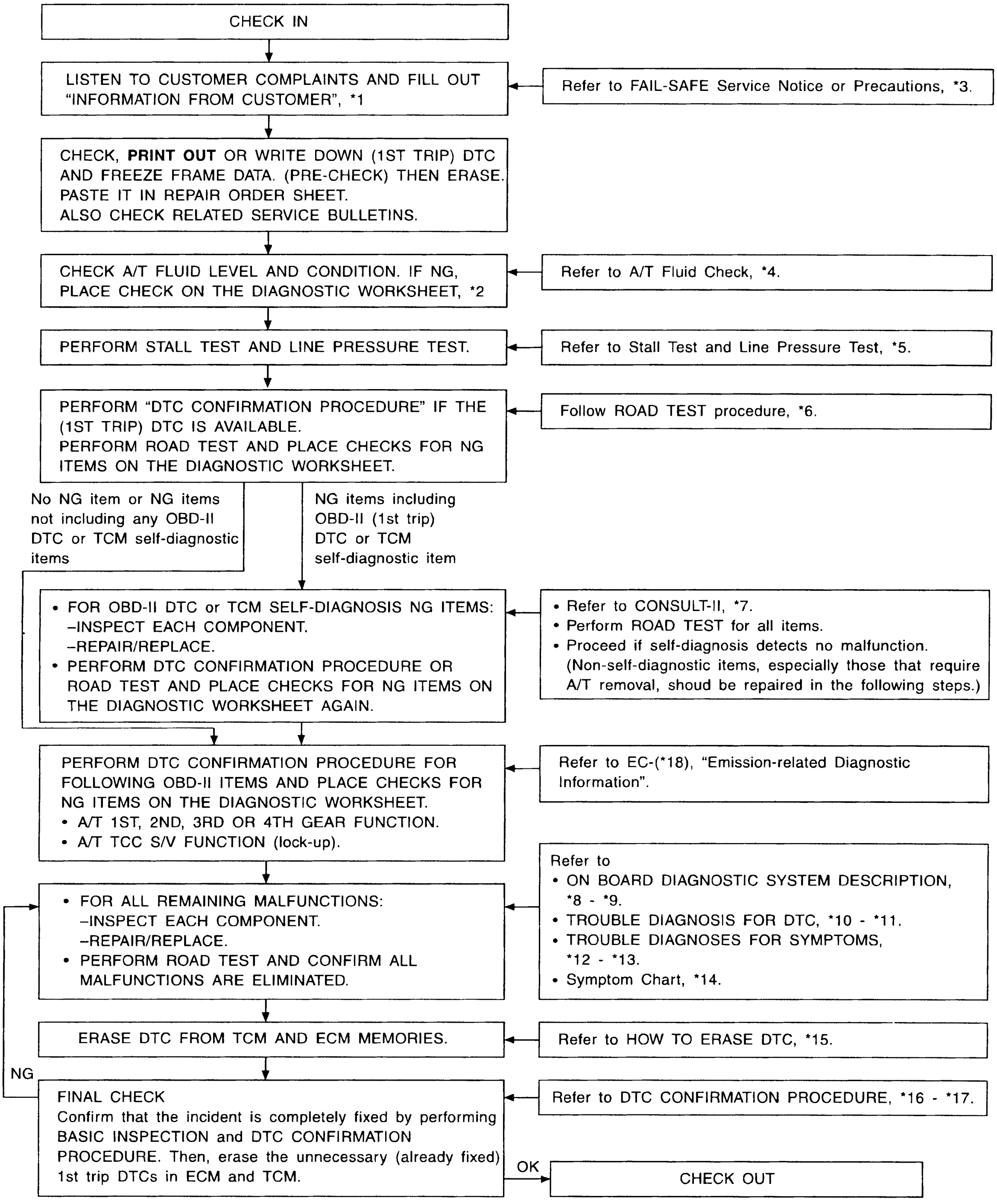

SAT086JI

*1	AT-46	*2	AT-47	*3	AT-9
*4	AT-16	*5	AT-51, AT-54	*6	AT-56
*7	AT-79	*8	AT-38	*9	AT-41
*10	AT-93	*11	AT-192	*12	AT-196
*13	AT-235	*14	AT-66	*15	AT-39
*16	AT-93	*17	AT-192	*18	EC-48

DIAGNOSTIC WORKSHEET

Information from Customer

KEY POINTS

- **WHAT**..... Vehicle & A/T models
- **WHEN**..... Date, Frequencies
- **WHERE**..... Road conditions
- **HOW**..... Operating conditions, Symptoms

Customer name MR./MS	Model & Year	VIN
Trans. model	Engine	Mileage
Malfunction Date	Manuf. Date	In Service Date
Frequency	❑ Continuous ❑ Intermittent (times a day)	
Symptoms	❑ Vehicle does not move. (❑ Any position ❑ Particular position)	
	❑ No up-shift (❑ 1st → 2nd ❑ 2nd → 3rd ❑ 3rd → 4th)	
	❑ No down-shift (❑ 4th → 3rd ❑ 3rd → 2nd ❑ 2nd → 1st)	
	❑ Lockup malfunction	
	❑ Shift point too high or too low.	
	❑ Shift shock or slip (❑ N → D ❑ N → R ❑ Lockup ❑ Any drive position)	
	❑ Noise or vibration	
	❑ No kick down	
	❑ No pattern select	
	❑ Others ( )	
Malfunction indicator lamp (MIL)	❑ Continuously lit	❑ No lit

Diagnostic Worksheet

1.	❏ Read the Fail-safe and listen to customer complaints.	AT-42, AT-46
2.	❏ Check A/T fluid ❏ Leakage (Follow specified procedure) ❏ Fluid condition ❏ Fluid level	AT-16
3.	❏ Perform “STALL TEST” and “LINE PRESSURE TEST”. ❏ “STALL TEST” — Mark possible damaged components/others. ❏ Torque converter one-way clutch ❏ Reverse clutch ❏ Forward clutch ❏ Overrun clutch ❏ Forward one-way clutch ❏ Low & reverse brake ❏ Low one-way clutch ❏ Engine ❏ Line pressure is low ❏ Clutches and brakes except high clutch and brake band are OK ❏ “LINE PRESSURE TEST” — Suspected parts:	AT-51, AT-54
4.	❏ Perform “Road Test”.	AT-56
	4-1. “Check Before Engine is Started” ❏ AT-196, "OD OFF Indicator Lamp Does Not Come On" . ❏ Perform self-diagnostics. Enter checks for detected items. AT-81 , AT-89 . ❏ AT-93, "DTC U1000 CAN COMMUNICATION LINE" . ❏ AT-96, "DTC P0705 PARK/NEUTRAL POSITION (PNP) SWITCH" . ❏ AT-101, "DTC P0710 A/T FLUID TEMPERATURE SENSOR CIRCUIT" . ❏ AT-106, "DTC P0720 VEHICLE SPEED SENSOR·A/T (REVOLUTION SENSOR)" . ❏ AT-112, "DTC P0725 ENGINE SPEED SIGNAL" . ❏ AT-116, "DTC P0731 A/T 1ST GEAR FUNCTION" . ❏ AT-121, "DTC P0732 A/T 2ND GEAR FUNCTION" . ❏ AT-126, "DTC P0733 A/T 3RD GEAR FUNCTION" . ❏ AT-131, "DTC P0734 A/T 4TH GEAR FUNCTION" . ❏ AT-138, "DTC P0740 TORQUE CONVERTER CLUTCH SOLENOID VALVE" . ❏ AT-143, "DTC P0744 A/T TCC S/V FUNCTION (LOCK-UP)" . ❏ AT-151, "DTC P0745 LINE PRESSURE SOLENOID VALVE" . ❏ AT-157, "DTC P0750 SHIFT SOLENOID VALVE A" . ❏ AT-162, "DTC P0755 SHIFT SOLENOID VALVE B" . ❏ AT-167, "DTC P1705 ACCELERATOR PEDAL POSITION (APP) SENSOR" . ❏ AT-172, "DTC P1760 OVERRUN CLUTCH SOLENOID VALVE" . ❏ AT-177, "DTC VEHICLE SPEED SENSOR MTR" . ❏ AT-181, "DTC BATT/FLUID TEMP SEN (A/T FLUID TEMP SENSOR CIRCUIT AND TCM POWER SOURCE)" . ❏ AT-187, "MAIN POWER SUPPLY AND GROUND CIRCUIT" . ❏ AT-191, "DTC CONTROL UNIT (RAM), CONTROL UNIT (ROM)" . ❏ AT-192, "DTC CONTROL UNIT(EEPROM)" .	AT-56

4.	4-2.	“Check at Idle”	AT-57
		❏ AT-198, "Engine Cannot Be Started in “P” and “N” Position" . ❏ AT-199, "In “P” Position, Vehicle Moves Forward or Backward When Pushed" . ❏ AT-200, "In “N” Position, Vehicle Moves" . ❏ AT-202, "Large Shock “N” → “R” Position" . ❏ AT-203, "Vehicle Does Not Creep Backward in “R” Position" . ❏ AT-206, "Vehicle Does Not Creep Forward in “D”, “2” or “1” Position" .	
	4-3.	“Cruise Test”	AT-59
		Part 1	
		❏ AT-208, "Vehicle Cannot Be Started From D_1" . ❏ AT-211, "A/T Does Not Shift: $D_1 \rightarrow D_2$ or Does Not Kickdown: $D_4 \rightarrow D_2$" . ❏ AT-214, "A/T Does Not Shift: $D_2 \rightarrow D_3$" . ❏ AT-217, "A/T Does Not Shift: $D_3 \rightarrow D_4$" . ❏ AT-219, "A/T Does Not Perform Lock-up" . ❏ AT-220, "A/T Does Not Hold Lock-up Condition" . ❏ AT-222, "Lock-up Is Not Released" . ❏ AT-223, "Engine Speed Does Not Return to Idle (Light Braking $D_4 \rightarrow D_3$)" .	
		Part 2	AT-62
		❏ AT-208, "Vehicle Cannot Be Started From D_1" . ❏ AT-211, "A/T Does Not Shift: $D_1 \rightarrow D_2$ or Does Not Kickdown: $D_4 \rightarrow D_2$" . ❏ AT-214, "A/T Does Not Shift: $D_2 \rightarrow D_3$" . ❏ AT-217, "A/T Does Not Shift: $D_3 \rightarrow D_4$" .	
		Part 3	AT-63
		❏ AT-225, "A/T Does Not Shift: $D_4 \rightarrow D_3$, When OD OFF" . ❏ AT-226, "A/T Does Not Shift: $D_3 \rightarrow 2_2$, When Selector Lever “D” → “2” Position" . ❏ AT-228, "A/T Does Not Shift: $2_2 \rightarrow 1_1$, When Selector Lever “2” → “1” on Position" . ❏ AT-231, "Vehicle Does Not Decelerate by Engine Brake" . ❏ Perform self-diagnostics. Enter checks for detected items. AT-81 , AT-89 .	
		❏ AT-93, "DTC U1000 CAN COMMUNICATION LINE" . ❏ AT-96, "DTC P0705 PARK/NEUTRAL POSITION (PNP) SWITCH" . ❏ AT-101, "DTC P0710 A/T FLUID TEMPERATURE SENSOR CIRCUIT" . ❏ AT-106, "DTC P0720 VEHICLE SPEED SENSOR·A/T (REVOLUTION SENSOR)" . ❏ AT-112, "DTC P0725 ENGINE SPEED SIGNAL" . ❏ AT-116, "DTC P0731 A/T 1ST GEAR FUNCTION" . ❏ AT-121, "DTC P0732 A/T 2ND GEAR FUNCTION" . ❏ AT-126, "DTC P0733 A/T 3RD GEAR FUNCTION" . ❏ AT-131, "DTC P0734 A/T 4TH GEAR FUNCTION" . ❏ AT-138, "DTC P0740 TORQUE CONVERTER CLUTCH SOLENOID VALVE" . ❏ AT-143, "DTC P0744 A/T TCC S/V FUNCTION (LOCK-UP)" . ❏ AT-151, "DTC P0745 LINE PRESSURE SOLENOID VALVE" . ❏ AT-157, "DTC P0750 SHIFT SOLENOID VALVE A" . ❏ AT-162, "DTC P0755 SHIFT SOLENOID VALVE B" . ❏ AT-167, "DTC P1705 ACCELERATOR PEDAL POSITION (APP) SENSOR" . ❏ AT-172, "DTC P1760 OVERRUN CLUTCH SOLENOID VALVE" . ❏ AT-177, "DTC VEHICLE SPEED SENSOR MTR" . ❏ AT-181, "DTC BATT/FLUID TEMP SEN (A/T FLUID TEMP SENSOR CIRCUIT AND TCM POWER SOURCE)" . ❏ AT-187, "MAIN POWER SUPPLY AND GROUND CIRCUIT" . ❏ AT-191, "DTC CONTROL UNIT (RAM), CONTROL UNIT (ROM)" . ❏ AT-192, "DTC CONTROL UNIT(EEPROM)" .	
5.	❏ For self-diagnosis NG items, inspect each component. Repair or replace the damaged parts.		AT-251
6.	❏ Perform “Road Test”.		AT-56
7.	❏ Perform the Diagnostic Procedures for all remaining items marked NG. Repair or replace the damaged parts. Refer to the Symptom Chart when you perform the procedures. (The chart also shows some other possible symptoms and the component inspection orders.)		AT-81, AT-89
8.	❏ Erase DTC from TCM and ECM memories.		AT-39, EC-60

A/T Electrical Parts Location

ACS007JU

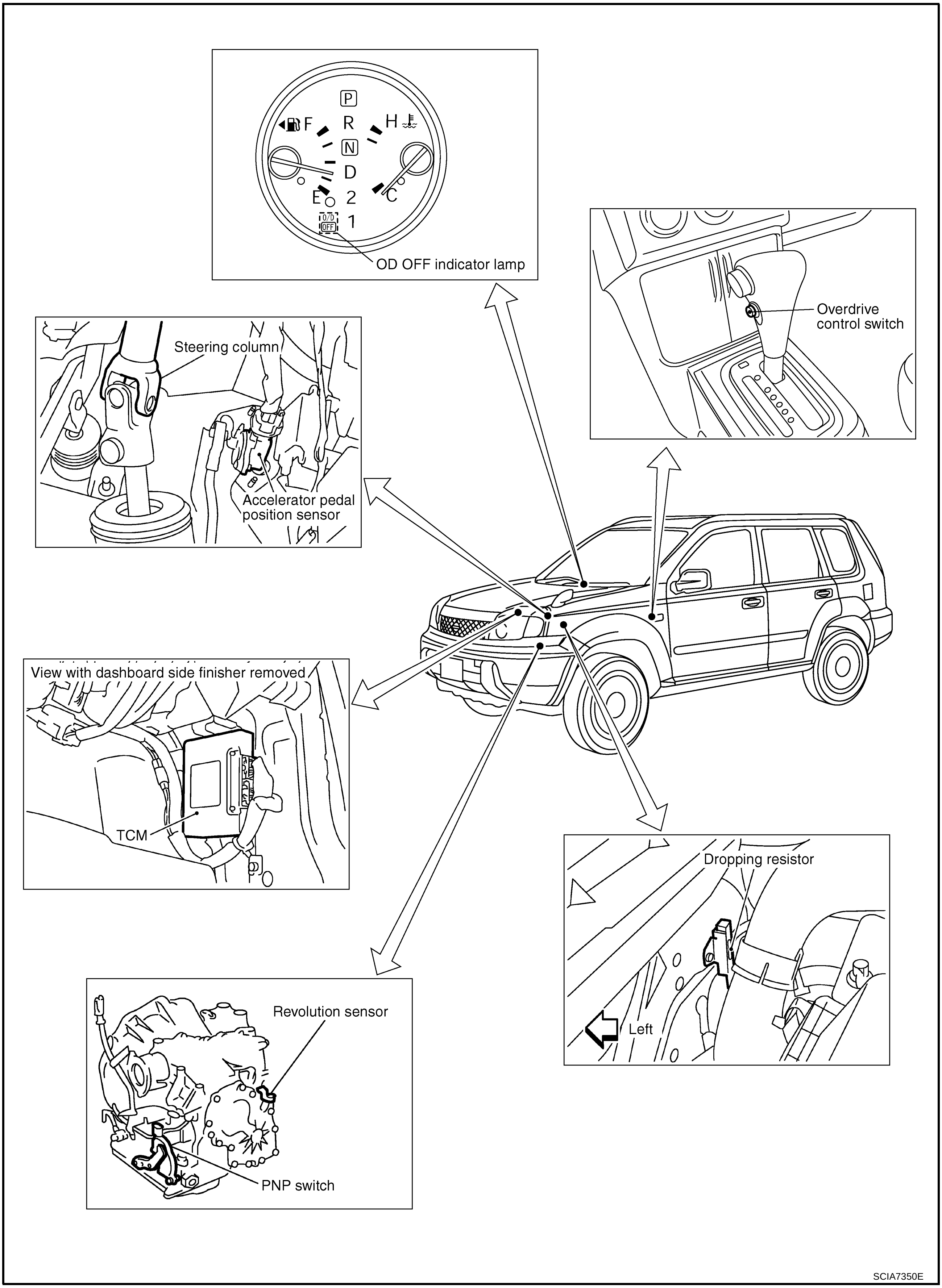

Circuit Diagram

ACS007JV

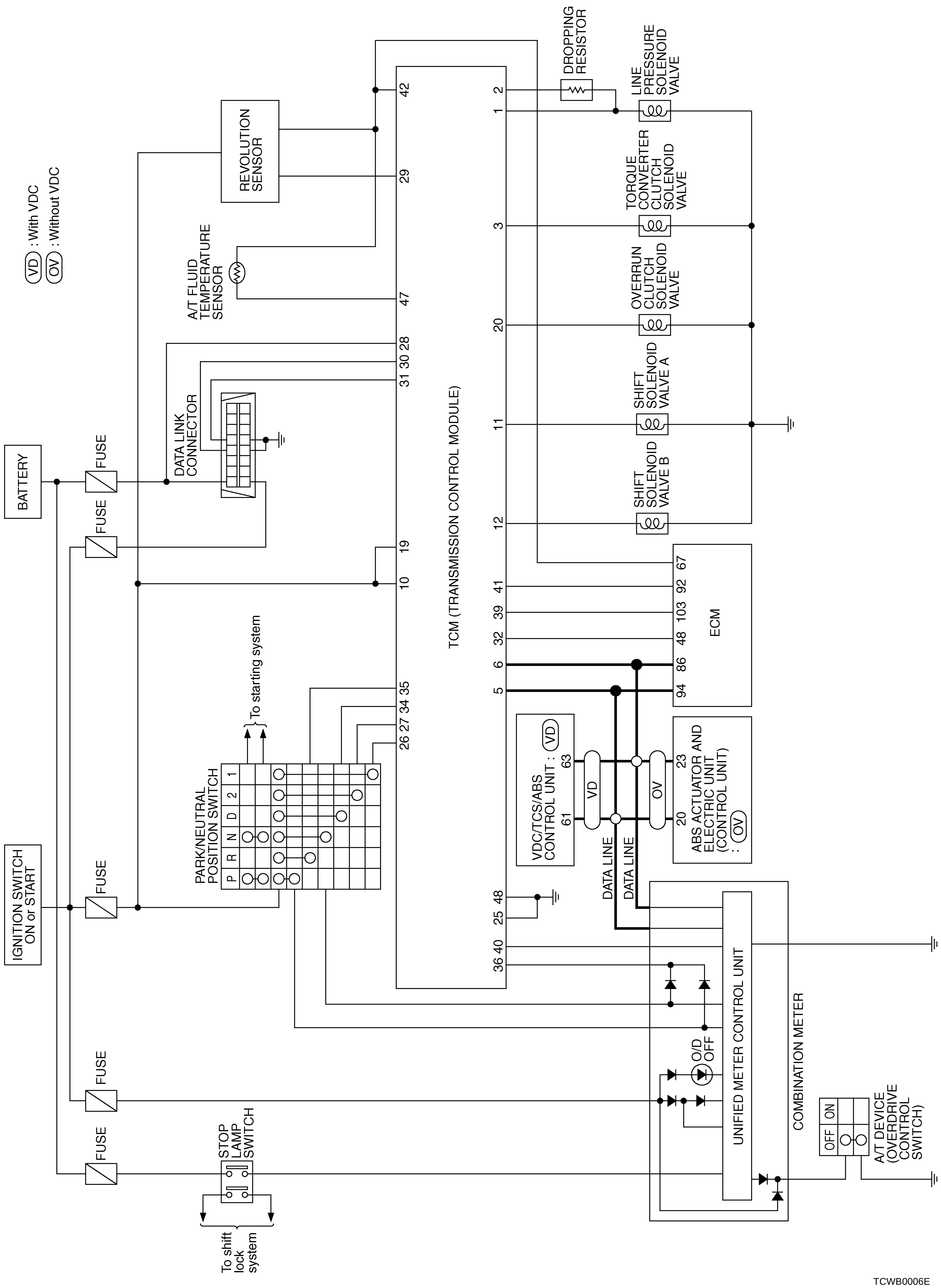

TCWB0006E

Inspections before Trouble Diagnosis

ACS007JW

A/T FLUID CHECK

A/T Fluid Leakage and Fluid Level Check

Inspect for A/T fluid leakage and check the A/T fluid level. Refer to AT-16, "Checking A/T Fluid" .

A/T Fluid Condition Check

Inspect the A/T fluid condition.

Fluid status	Conceivable Cause	Required Operation
Varnished (viscous varnish state)	Clutch, brake scorched	Replace the ATF and check the A/T main unit and the vehicle for malfunctions (wire harnesses, cooler pipes, etc.)
Milky white or cloudy	Water in the ATF	Replace the ATF and check for places where water is getting in.
Large amount of metal powder mixed in	Unusual wear of sliding parts within A/T	Replace the ATF and check for improper operation of the A/T.

SAT638A

STALL TEST

Stall Test Procedure

1. Check ATF and engine oil levels. If necessary, add ATF and oil.
2. Drive vehicle for approximately 10 minutes or until ATF and engine oil reach operating temperature.

ATF operating temperature: 50 - 80°C (122 - 176°F)

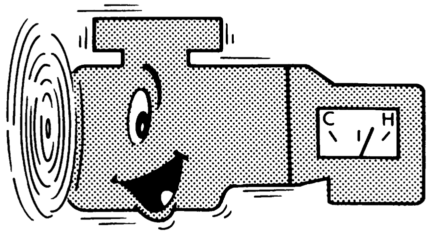

SAT647B

3. Set parking brake and block wheels.
4. Install a tachometer where it can be seen by driver during test.
   - **It is good practice to mark the point of specified engine rpm on indicator.**

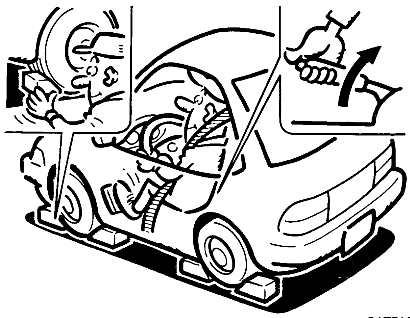

SAT513G

5. Start engine, apply foot brake, and place selector lever in “D” position.

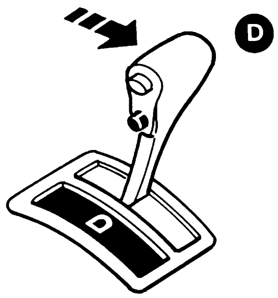

SAT775B

6. Accelerate to wide open throttle gradually while applying foot brake.
7. Quickly note the engine stall revolution and immediately release throttle.
   - **During test, do not hold throttle wide open for more than 5 seconds.**

   Stall revolution: 2,300 - 2,750 rpm

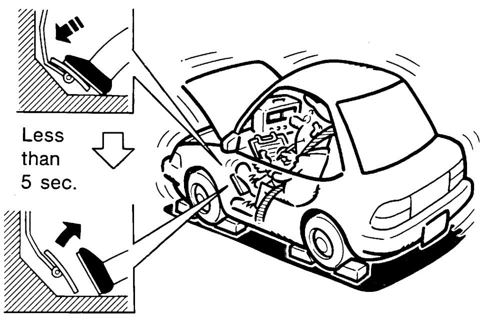

SAT514G

8. Move selector lever to “N” position.
9. Cool off ATF.
   - **Run engine at idle for at least 1 minute.**
10. Repeat steps 5 through 9 with selector lever in “2”, “1” and “R” positions.

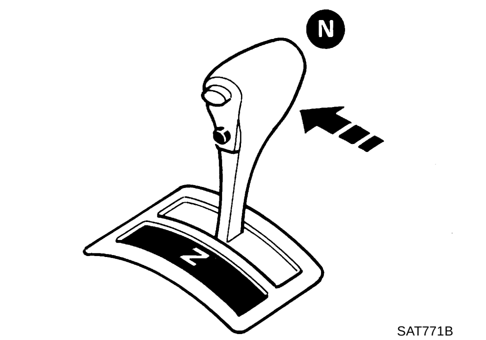

SAT771B

Judgement of Stall Test

The test result and possible damaged components relating to each result are shown in the illustrations on next page.
In order to pinpoint the possible damaged components, refer to AT-45, "Work Flow Chart" .

NOTE:
Stall revolution is too high in “D”, “2”, or “1” position:

- Slippage occurs in 1st gear but not in 2nd and 3rd gears. ..... Low one-way clutch slippage
- Slippage occurs in the following gears:
  1st through 3rd gears in “D” position and engine brake functions with OD OFF. (OD OFF indicator lamp is on.)
  1st and 2nd gears in “2” position and engine brake functions with accelerator pedal released (fully closed throttle)...... Forward clutch or forward one-way clutch slippage

Stall revolution is too high in “R” position:

- Engine brake does not function in “1” position. ..... Low & reverse brake slippage
- Engine brake functions in “1” position. ..... Reverse clutch slippage

Stall revolution within specifications:

- Vehicle does not achieve speed of more than 80 km/h (50 MPH). ..... One-way clutch seizure in torque converter housing

CAUTION:
Be careful since A/T fluid temperature increases abnormally.

- Slippage occurs in 3rd and 4th gears in “D” position. ..... High clutch slippage
- Slippage occurs in 2nd and 4th gears in “D” position. ..... Brake band slippage
- Engine brake does not function in 2nd and 3rd gears in “D” position, 2nd gear in “2” position, and 1st gear in “1” position with OD OFF. (OD OFF indicator lamp is on.) ..... Overrun clutch slippage

Stall revolution less than specifications:

- Poor acceleration during starts. ..... One-way clutch seizure in torque converter

Selector lever position	Judgement		
D	H	O	L
2	H	O	L
1	H	O	L
R	O	H	L

O : Stall revolution is normal.
H : Stall revolution is higher than specified.
L : Stall revolution is lower than specified.

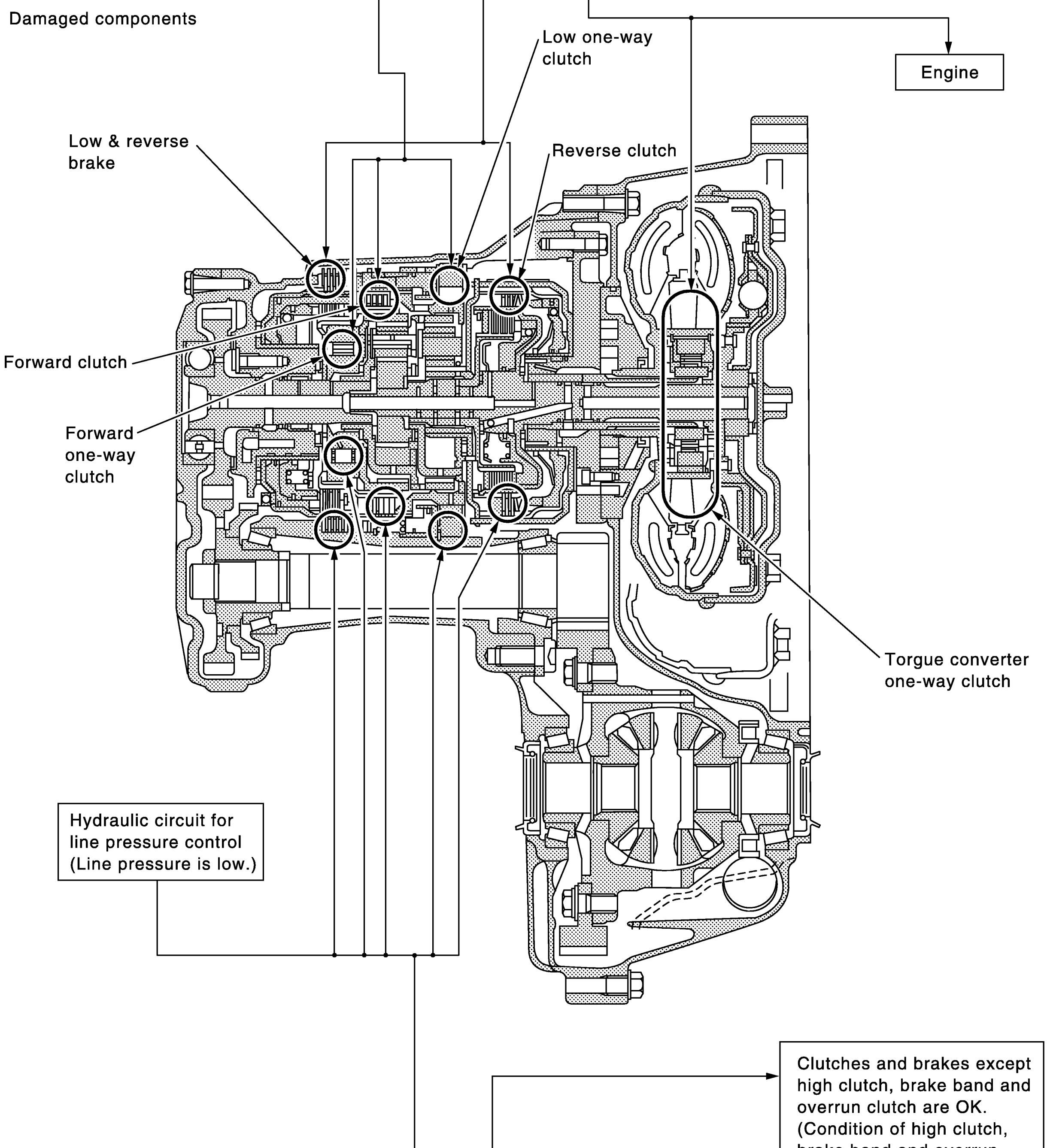

D	H	O
2	H	O
1	H	O
R	H	O
Selector lever position	Judgement	

Clutches and brakes except high clutch, brake band and overrun clutch are OK. (Condition of high clutch, brake band and overrun clutch cannot be confirmed by stall test.)

SCIA0707E

LINE PRESSURE TEST

Line Pressure Test Ports

Location of line pressure test ports are shown in the figure.

- **Always replace pressure plugs as they are self-sealing bolts.**

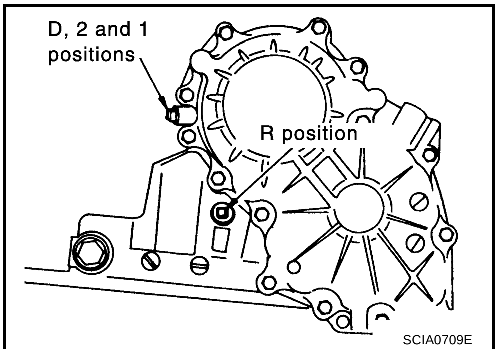

SCIA0709E

Line Pressure Test Procedure

1. Check ATF and engine oil levels. If necessary, add ATF or engine oil.
2. Drive vehicle for approx. 10 minutes or until engine oil and ATF reach operating temperature.

   ATF operating temperature: 50 - 80°C (122 -176°F)

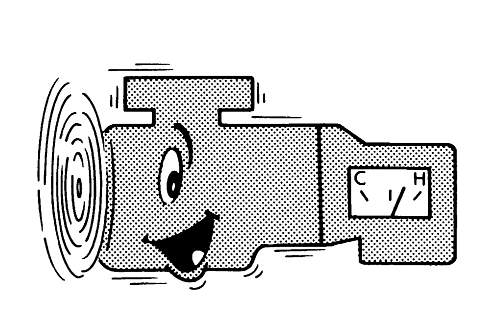

SAT647B

3. Install oil pressure gauge to corresponding line pressure test port.

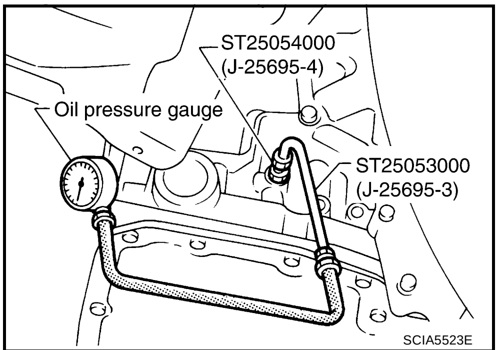

SCIA5523E

4. Set parking brake and block wheels.
   - **Continue to depress brake pedal fully while line pressure test is being performed at stall speed.**

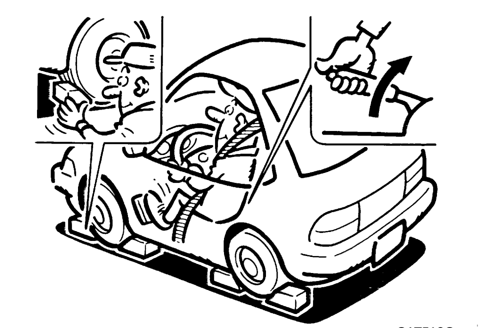
SAT513G

5. Start engine and measure line pressure at idle and stall speed.
   - **When measuring line pressure at stall speed, follow the stall test procedure. Refer to AT-51, "STALL TEST" .**

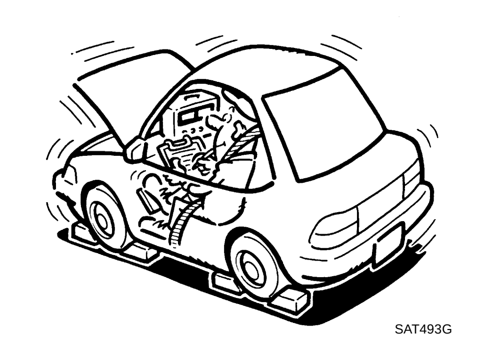

SAT493G

A
B
AT
D
E
F
G
H
I
J
K
L
M

Line Pressure

Engine speed	Line pressure kPa (kg/cm^2 , psi)	
	"D", "2" and "1" positions	"R" position
At idle speed	500 (5.1, 73)	778 (7.9, 113)
At stall speed	1,233 (12.6, 179)	1,918 (19.6, 278)

Judgement of Line Pressure Test

Judgement		Suspected parts
At idle	Line pressure is low in all positions.	● Oil pump wear ● Control piston damage ● Pressure regulator valve or plug sticking ● Spring for pressure regulator valve damaged ● Fluid pressure leakage between oil strainer and pressure regulator valve ● Clogged strainer
	Line pressure is low in particular position.	● Fluid pressure leakage between manual valve and particular clutch ● For example, line pressure is: – Low in "R" and "1" positions, but – Normal in "D" and "2" positions. Therefore, fluid leakage exists at or around low and reverse brake circuit. Refer to AT-22, "CLUTCH AND BAND CHART" .
	Line pressure is high.	● Maladjustment of throttle position sensor ● A/T fluid temperature sensor damaged ● Line pressure solenoid valve sticking ● Short circuit of line pressure solenoid valve circuit ● Pressure modifier valve sticking ● Pressure regulator valve or plug sticking ● Open in dropping resistor circuit
At stall speed	Line pressure is low.	● Maladjustment of throttle position sensor ● Line pressure solenoid valve sticking ● Short circuit of line pressure solenoid valve circuit ● Pressure regulator valve or plug sticking ● Pressure modifier valve sticking ● Pilot valve sticking

Road Test

ACS007JX

DESCRIPTION

- The purpose of the test is to determine overall performance of A/T and analyze causes of malfunctions.
- The road test consists of the following three parts:

1. Check before engine is started. Refer to AT-56 .
2. Check at idle. Refer to AT-57 .
3. Cruise test
   - Inspection all the item from Part 1 to Part 3. Refer to AT-59 , AT-62 and AT-63 .

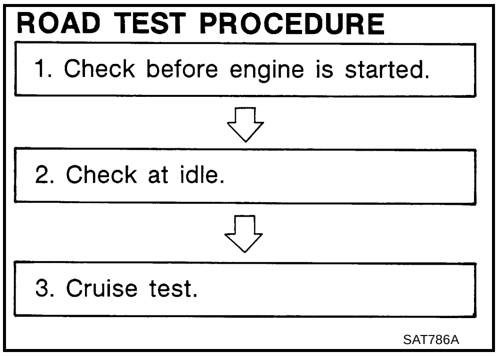

SAT786A

- Before road test, familiarize yourself with all test procedures and items to check.
- Perform tests on all items until specified symptom is found. Troubleshoot items which check out No Good after road test. Refer to the following.
  Refer to AT-38, "ON BOARD DIAGNOSTIC (OBD) SYSTEM" and AT-193, "TROUBLE DIAGNOSES FOR SYMPTOMS" .

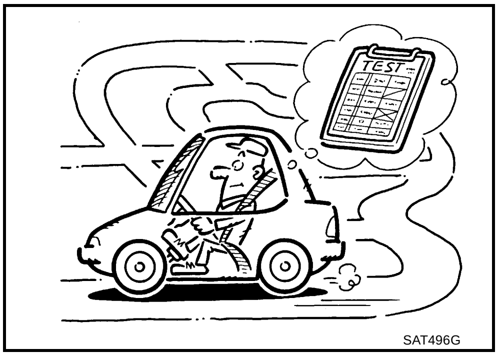

SAT496G

Check before Engine Is Started

ACS007JY

1. CHECK OD OFF INDICATOR LAMP

1. Park vehicle on flat surface.
2. Move selector lever to “P” position.
3. Turn ignition switch OFF. Wait at least 5 seconds.

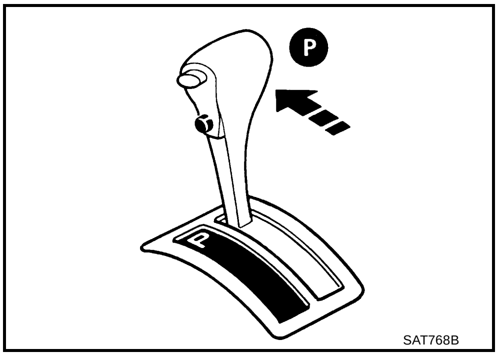

SAT768B

4. Turn ignition switch ON. (Do not start engine.)

Does OD OFF indicator lamp come on for about 2 seconds?

YES >> 1. Turn ignition switch OFF.
2. Perform self-diagnosis and note NG items.
Refer to AT-81, "SELF-DIAGNOSTIC RESULT MODE" , AT-89, "Diagnostic Procedure Without CONSULT-II" .
3. Go to AT-57, "Check at Idle" .

NO >> Stop “Road Test”. Go to AT-196, "OD OFF Indicator Lamp Does Not Come On" .

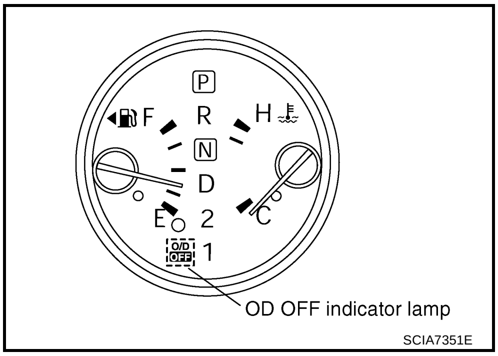

SCIA7351E

Check at Idle

ACS007JZ

A
B
AT
D
E
F
G
H
I
J
K
L
M

1. CHECK ENGINE START

1. Park vehicle on flat surface.
2. Turn ignition switch ON. (Do not start engine.)
3. Move selector lever to “P” or “N” position.
4. Turn ignition switch to “START” position.

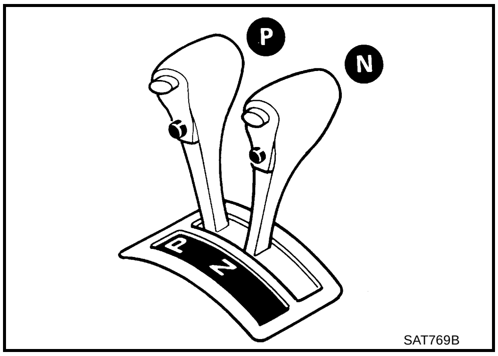

SAT769B

Is engine started?

YES >> GO TO 2.

NO >>
- Stop “Road Test”. Mark the box on the “DIAGNOSTIC WORKSHEET”. Refer to AT-46 .
- Go to AT-198, "Engine Cannot Be Started in “P” and “N” Position" .

2. CHECK ENGINE START

1. Turn ignition switch ON. (Do not start engine.)
2. Move selector lever to “R”, “D”, “2” or “1” position.
3. Turn ignition switch to “START” position.

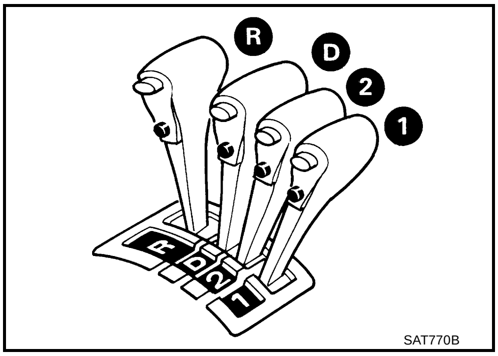

SAT770B

Is engine started?

YES >>
- Stop “Road Test”. Mark the box on the “DIAGNOSTIC WORKSHEET”. Refer to AT-46 .
- Go to AT-198, "Engine Cannot Be Started in “P” and “N” Position" .
- Continue “Road Test”.

NO >> GO TO 3.

3. CHECK VEHICLE MOVE

1. Move selector lever to “P” position.
2. Turn ignition switch OFF.
3. Release parking brake.

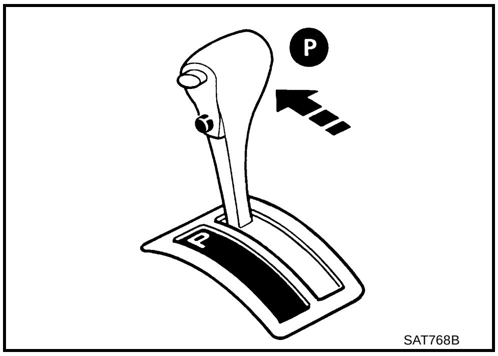

SAT768B

4. Push vehicle forward or backward.

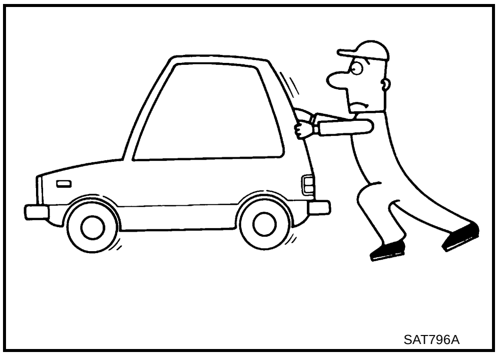
SAT796A

Does vehicle move when it is pushed forward or backward?

YES >>
- Mark the box on the “DIAGNOSTIC WORKSHEET”. Refer to AT-46 .
- Go to AT-199, "In “P” Position, Vehicle Moves Forward or Backward When Pushed" .
- Continue “Road Test”.

NO >> GO TO 4.

4. CHECK VEHICLE MOVE

1. Apply parking brake.
2. Start engine.
3. Move selector lever to “N” position.
4. Release parking brake.

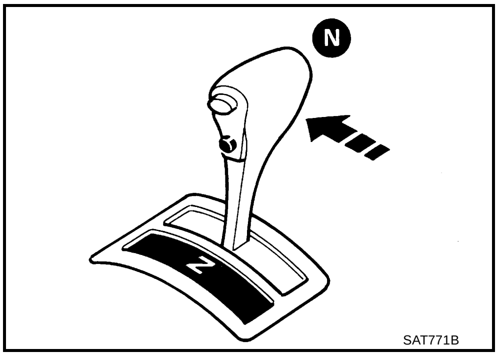

Does vehicle move forward or backward?

YES >> ● Mark the box on the “DIAGNOSTIC WORKSHEET”. Refer to AT-46 .
● Go to AT-200, "In “N” Position, Vehicle Moves" .
● Continue “Road Test”.

NO >> GO TO 5.

5. CHECK SHIFT SHOCK

1. Apply foot brake.

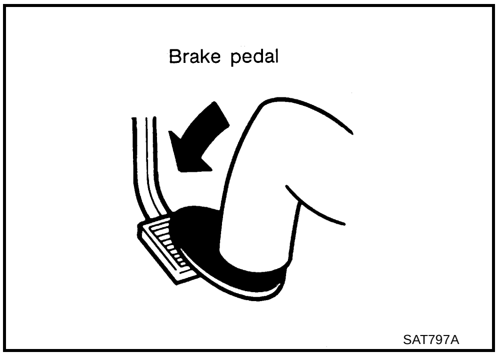

2. Move selector lever to “R” position.

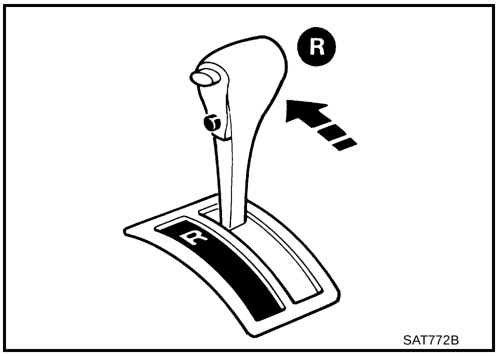

Is there large shock when changing from “N” to “R” position?

YES >> ● Mark the box on the “DIAGNOSTIC WORKSHEET”. Refer to AT-46 .
● Go to AT-202, "Large Shock “N” → “R” Position" .
● Continue “Road Test”.

NO >> GO TO 6.

6. CHECK VEHICLE MOVE

Release foot brake for several seconds.

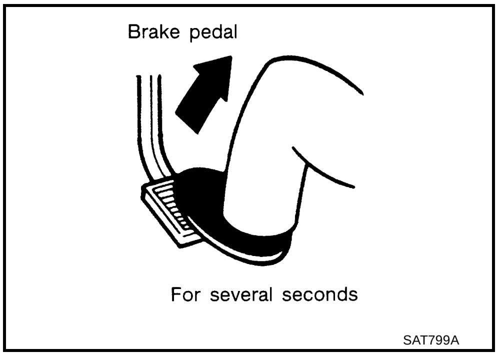

Does vehicle creep backward when foot brake is released?

YES >> GO TO 7.

NO >> ● Mark the box on the “DIAGNOSTIC WORKSHEET”. Refer to AT-46 .
● Go to AT-203, "Vehicle Does Not Creep Backward in “R” Position" .
● Continue “Road Test”.

7. CHECK VEHICLE MOVE

Move selector lever to “D”, “2” and “1” positions and check if vehicle creeps forward.

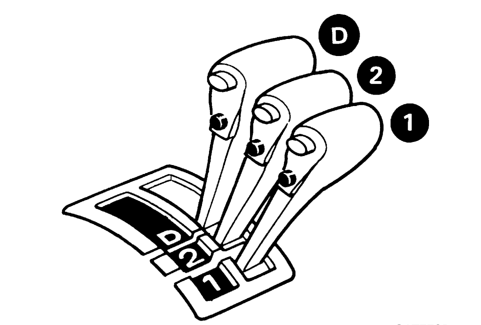

SAT773B

Does vehicle creep forward in all three positions?

YES >> Go to AT-59, "Cruise Test — Part 1" .

NO >>
- Mark the box on the “DIAGNOSTIC WORKSHEET”. Refer to AT-46 .
- Go to AT-206, "Vehicle Does Not Creep Forward in “D”, “2” or “1” Position" .
- Continue “Road Test”.

Cruise Test — Part 1

ACS007K0

1. CHECK STARTING GEAR (D_1) POSITION

1. Drive vehicle for approximately 10 minutes to warm engine oil and ATF up to operating temperature.

   ATF operating temperature: 50 - 80°C (122 - 176°F)

2. Park vehicle on flat surface.
3. Push overdrive control switch. (OD OFF indicator lamp is off.)
4. Move selector lever to “P” position.
5. Start engine.

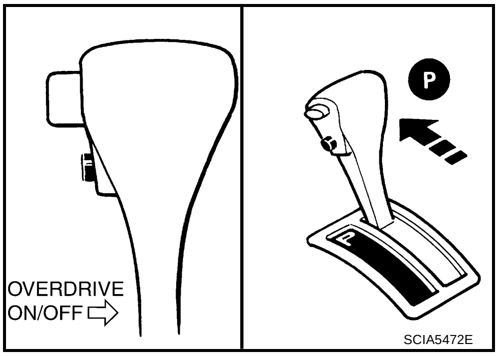

SCIA5472E

6. Move selector lever to “D” position.

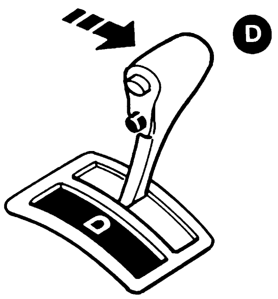

SAT775B

7. Accelerate vehicle by constantly depressing accelerator pedal half-way.

   Read gear position. Refer to AT-83, "DATA MONITOR MODE" .

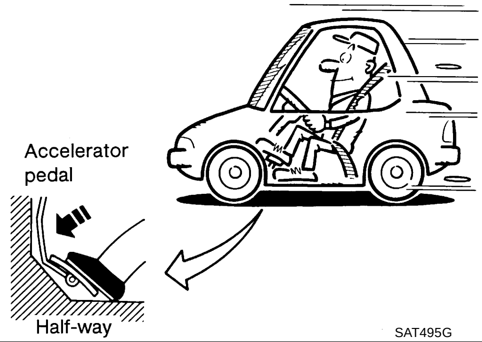

SAT495G

Does vehicle start from D_1 ?

YES >> GO TO 2.

NO >>
- Mark the box on the “DIAGNOSTIC WORKSHEET”. Refer to AT-46 .
- Go to AT-208, "Vehicle Cannot Be Started From D_1" .
- Continue “Road Test”.

A B AT D E F G H I J K L M

2. CHECK SHIFT-UP (D_1 TO D_2)

Check shift-up (D_1 to D_2).
Specified speed when shifting from D_1 to D_2. Refer to AT-65, "Vehicle Speed When Shifting Gears" .

Read gear position, throttle opening and vehicle speed. Refer to AT-83, "DATA MONITOR MODE" .

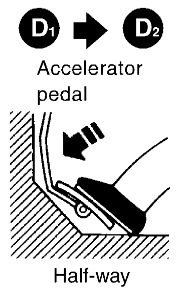

SCIA7188E

Does A/T shift from D_1 to D_2 at the specified speed?

YES >> GO TO 3.
NO >>
- Mark the box on the “DIAGNOSTIC WORKSHEET”. Refer to AT-46 .
- Go to AT-211, "A/T Does Not Shift: $D_1 \rightarrow D_2$ or Does Not Kickdown: $D_4 \rightarrow D_2$" .
- Continue “Road Test”.

3. CHECK SHIFT-UP (D_2 TO D_3)

Check shift-up (D_2 to D_3).
Specified speed when shifting from D_2 to D_3. Refer to AT-65, "Vehicle Speed When Shifting Gears" .

Read gear position, throttle opening and vehicle speed. Refer to AT-83, "DATA MONITOR MODE" .

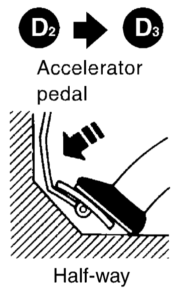

SCIA7189E

Does A/T shift from D_2 to D_3 at the specified speed?

YES >> GO TO 4.
NO >>
- Mark the box on the “DIAGNOSTIC WORKSHEET”. Refer to AT-46 .
- Go to AT-214, "A/T Does Not Shift: $D_2 \rightarrow D_3$" .
- Continue “Road Test”.

4. CHECK SHIFT-UP (D_3 TO D_4)

Check shift-up (D_3 to D_4).
Specified speed when shifting from D_3 to D_4. Refer to AT-65, "Vehicle Speed When Shifting Gears" .

Read gear position, throttle opening and vehicle speed. Refer to AT-83, "DATA MONITOR MODE" .

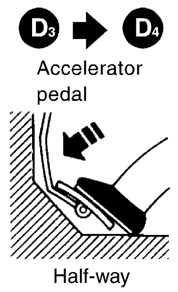

SCIA7190E

Does A/T shift from D_3 to D_4 at the specified speed?

YES >> GO TO 5.
NO >>
- Mark the box on the “DIAGNOSTIC WORKSHEET”. Refer to AT-46 .
- Go to AT-217, "A/T Does Not Shift: $D_3 \rightarrow D_4$" .
- Continue “Road Test”.

5. CHECK LOCK-UP (D4 TO D4 L/U)

Check lock-up (D4 to D4 L/U).
Specified speed when lock-up occurs. Refer to AT-65, "Vehicle Speed When Performing and Releasing Lock-up" .

Read vehicle speed, throttle opening when lock-up duty becomes 94%. Refer to AT-83, "DATA MONITOR MODE" .

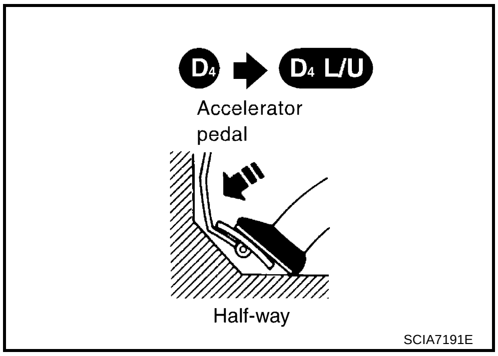

Does A/T perform lock-up at the specified speed?

YES >> GO TO 6.

NO >>
- Mark the box on the “DIAGNOSTIC WORKSHEET”. Refer to AT-46 .
- Go to AT-219, "A/T Does Not Perform Lock-up" .
- Continue “Road Test”.

6. CHECK LOCK-UP HOLD

Check lock-up hold.

When lock-up duty becomes 94%. Refer to AT-83, "DATA MONITOR MODE" .

Does A/T hold lock-up condition for more than 30 seconds?

YES >> GO TO 7.

NO >>
- Mark the box on the “DIAGNOSTIC WORKSHEET”. Refer to AT-46 .
- Go to AT-220, "A/T Does Not Hold Lock-up Condition" .
- Continue “Road Test”.

7. CHECK SHIFT-DOWN (D4 L/U TO D4)

Release accelerator pedal.

When lock-up duty becomes 4%. Refer to AT-83, "DATA MONITOR MODE" .

Is lock-up released when accelerator pedal is released?

YES >> GO TO 8.

NO >>
- Mark the box on the “DIAGNOSTIC WORKSHEET”. Refer to AT-46 .
- Go to AT-222, "Lock-up Is Not Released" .
- Continue “Road Test”.

8. CHECK SHIFT-DOWN (D4 TO D3)

Decelerate vehicle by applying foot brake lightly.

Read gear position and engine speed. Refer to AT-83, "DATA MONITOR MODE" .

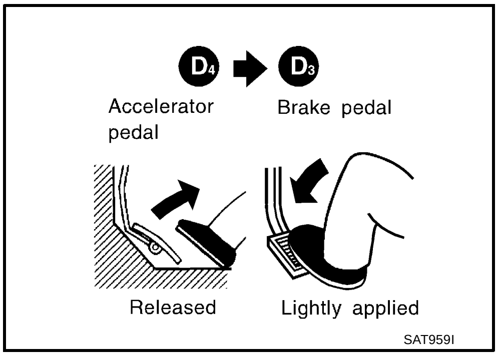

Does engine speed return to idle smoothly when A/T is shifted from D4 to D3 ?

YES >> 1. Stop vehicle.
2. Go to AT-62, "Cruise Test — Part 2" .

NO >>
- Mark the box on the “DIAGNOSTIC WORKSHEET”. Refer to AT-46 .
- Go to AT-223, "Engine Speed Does Not Return to Idle (Light Braking D4 → D3)" .
- Continue “Road Test”.

Cruise Test — Part 2

ACS007K1

1. CHECK STARTING GEAR (D_1) POSITION

1. Push overdrive control switch. (OD OFF indicator lamp is off.)
2. Move selector lever to “D” position.
3. Accelerate vehicle by half-throttle again.

Read gear position. Refer to AT-83, "DATA MONITOR MODE" .

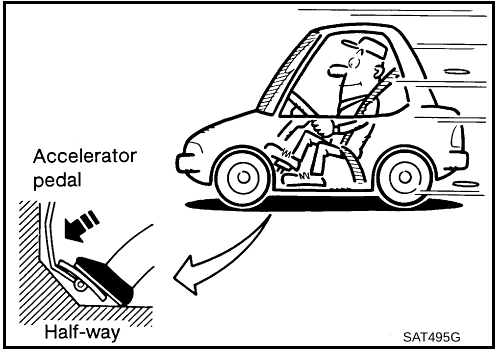

SAT495G

Does vehicle start from D_1 ?

YES >> GO TO 2.

NO >>
- Mark the box on the “DIAGNOSTIC WORKSHEET”. Refer to AT-46 .
- Go to AT-208, "Vehicle Cannot Be Started From D_1" .
- Continue “Road Test”.

2. CHECK SHIFT-UP AND SHIFT-DOWN (D_3 TO D_4 TO D_2)

1. Accelerate vehicle to 80 km/h (50 MPH) as shown in the figure.
2. Release accelerator pedal and then quickly depress it fully.

Read gear position and throttle opening. Refer to AT-83, "DATA MONITOR MODE" .

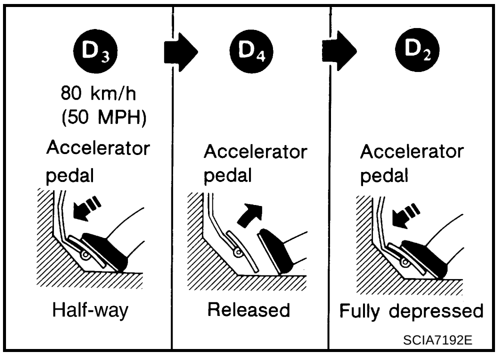

SCIA7192E

Does A/T shift from D_4 to D_2 as soon as accelerator pedal is depressed fully?

YES >> GO TO 3.

NO >>
- Mark the box on the “DIAGNOSTIC WORKSHEET”. Refer to AT-46 .
- Go to AT-211, "A/T Does Not Shift: $D_1 \rightarrow D_2$ or Does Not Kickdown: $D_4 \rightarrow D_2$" .
- Continue “Road Test”.

3. CHECK SHIFT-UP (D_2 TO D_3)

Check shift-up (D_2 to D_3)
Specified speed when shifting from D_2 to D_3 . Refer to AT-65, "Vehicle Speed When Shifting Gears" .

Read gear position, throttle opening and vehicle speed. Refer to AT-83, "DATA MONITOR MODE" .

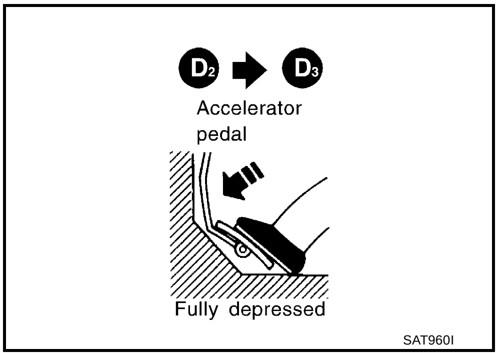

SAT960I

Does A/T shift from D_2 to D_3 at the specified speed?

YES >> GO TO 4.

NO >>
- Mark the box on the “DIAGNOSTIC WORKSHEET”. Refer to AT-46 .
- Go to AT-214, "A/T Does Not Shift: $D_2 \rightarrow D_3$" .
- Continue “Road Test”.

4. CHECK SHIFT-UP (D_3 TO D_4) AND ENGINE BRAKE

Release accelerator pedal after shifting from D_2 to D_3.

Read gear position, throttle opening and vehicle speed. Refer to AT-83, "DATA MONITOR MODE" .

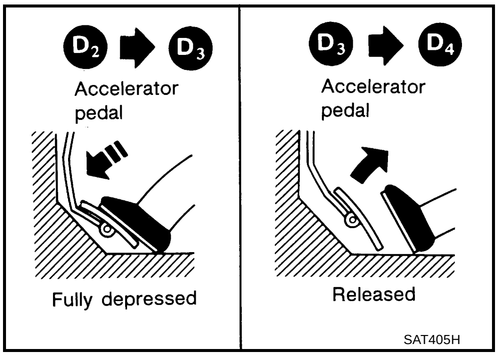

Does A/T shift from D_3 to D_4 and does vehicle decelerate by engine brake?

YES >> 1. Stop vehicle.
2. Go to AT-63, "Cruise Test — Part 3" .

NO >>
- Mark the box on the “DIAGNOSTIC WORKSHEET”. Refer to AT-46 .
- Go to AT-217, "A/T Does Not Shift: $D_3 \rightarrow D_4$" .
- Continue “Road Test”.

Cruise Test — Part 3

ACS007K2

1. CHECK SHIFT-DOWN (D_4 TO D_3)

1. Push overdrive control switch. (OD OFF indicator lamp is off.)
2. Move selector lever to “D” position.
3. Accelerate vehicle using half-throttle to D_4.

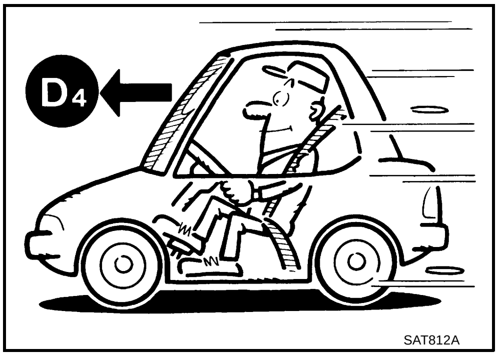

4. Release accelerator pedal.

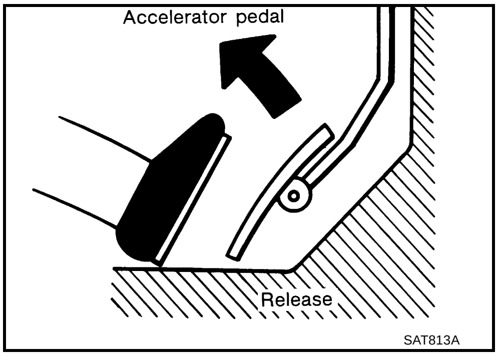

5. Push overdrive control switch. (OD OFF indicator lamp is on.)

Read gear position and vehicle speed. Refer to AT-83, "DATA MONITOR MODE" .

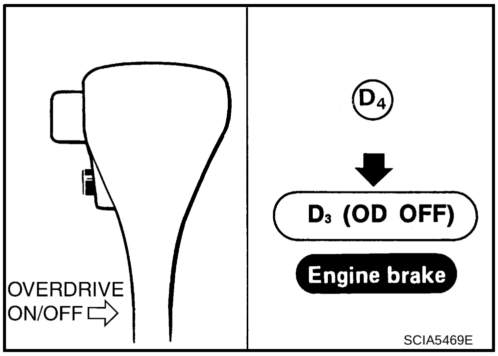

Does A/T shift from D_4 to D_3 (OD OFF)?

YES >> GO TO 2.

NO >>
- Mark the box on the “DIAGNOSTIC WORKSHEET”. Refer to AT-46 .
- Go to AT-225, "A/T Does Not Shift: $D_4 \rightarrow D_3$, When OD OFF" .
- Continue “Road Test”.

2. CHECK ENGINE BRAKE

Check engine brake.

Does vehicle decelerate by engine brake?

YES >> GO TO 3.

NO >>
- Mark the box on the “DIAGNOSTIC WORKSHEET”. Refer to AT-46 .
- Go to AT-231, "Vehicle Does Not Decelerate by Engine Brake" .
- Continue “Road Test”.

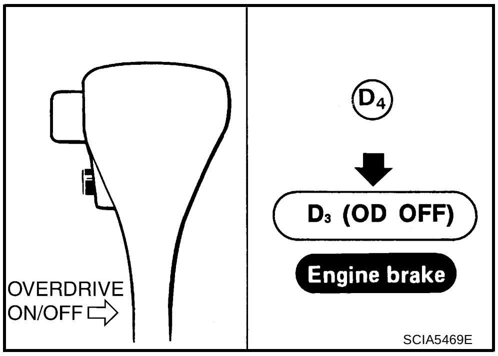

3. CHECK SHIFT-DOWN (D_3 TO 2_2)

Move selector lever from “D” to “2” position while driving in D_3 (OD OFF).

Read gear position. Refer to AT-83, "DATA MONITOR MODE"
.

Does A/T shift from D_3 (OD OFF) to 2_2 ?

YES >> GO TO 4.

NO >>
- Mark the box on the “DIAGNOSTIC WORKSHEET”. Refer to AT-46 .
- Go to AT-226, "A/T Does Not Shift: D_3 → 2_2 , When Selector Lever “D” → “2” Position" .
- Continue “Road Test”.

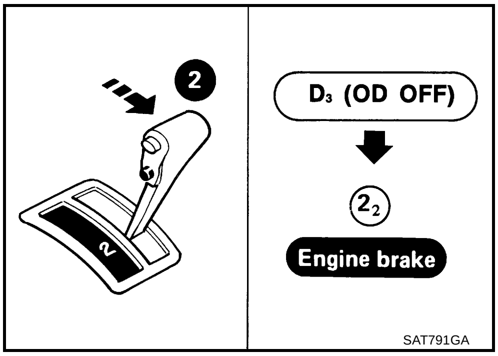

4. CHECK ENGINE BRAKE

Check engine brake.

Does vehicle decelerate by engine brake?

YES >> GO TO 5.

NO >>
- Mark the box on the “DIAGNOSTIC WORKSHEET”. Refer to AT-46 .
- Go to AT-231, "Vehicle Does Not Decelerate by Engine Brake" .
- Continue “Road Test”.

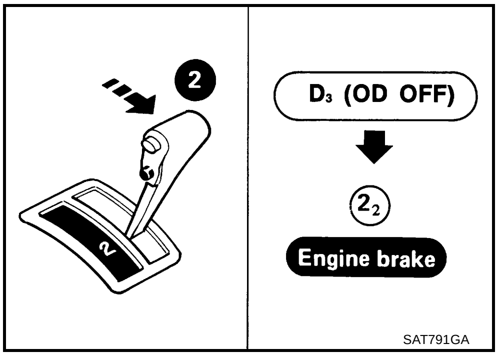

5. CHECK SHIFT-DOWN (2_2 TO 1_1)

Move selector lever from “2” to “1” position while driving in 2_2 .

Read gear position. Refer to AT-83, "DATA MONITOR MODE"
.

Does A/T shift from 2_2 to 1_1 position?

YES >> GO TO 6.

NO >>
- Mark the box on the “DIAGNOSTIC WORKSHEET”. Refer to AT-46 .
- Go to AT-228, "A/T Does Not Shift: 2_2 → 1_1 , When Selector Lever “2” → “1” on Position" .
- Continue “Road Test”.

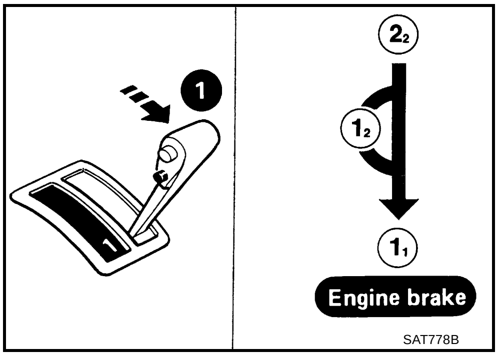

6. CHECK ENGINE BRAKE

Check engine brake.

Does vehicle decelerate by engine brake?

YES >> 1. Stop vehicle.

2. Perform self-diagnosis. Refer to AT-81, "SELF-DIAGNOSTIC RESULT MODE" , AT-89, "Diagnostic Procedure Without CONSULT-II" .

NO >>
- Mark the box on the “DIAGNOSTIC WORKSHEET”. Refer to AT-46 .
- Go to AT-231, "Vehicle Does Not Decelerate by Engine Brake" .
- Stop “Road Test”.

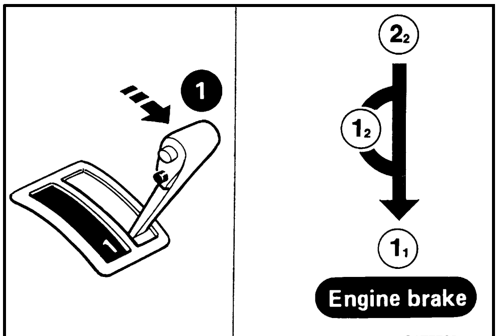

SAT778B

Vehicle Speed When Shifting Gears

ACS007K3

Throttle position	Shift pattern	Vehicle speed km/h (MPH)					
		$D_1 \rightarrow D_2$	$D_2 \rightarrow D_3$	$D_3 \rightarrow D_4$	$D_4 \rightarrow D_3$	$D_3 \rightarrow D_2$	$D_2 \rightarrow D_1$
Full throttle	Comfort	57 - 65 (35 - 40)	107 - 115 (66 - 71)	167 - 175 (104 - 109)	163 - 171 (101 - 106)	97 - 105 (60 - 65)	41 - 49 (25 - 30)
	Auto power	57 - 65 (35 - 40)	107 - 115 (66 - 71)	167 - 175 (104 - 109)	163 - 171 (101 - 106)	97 - 105 (60 - 65)	41 - 49 (25 - 30)
Half throttle	Comfort	36 - 44 (22 - 27)	71 - 79 (44 - 49)	131 - 139 (81 - 86)	77 - 85 (48 - 53)	38 - 46 (23 - 28)	5 - 13 (3 - 8)
	Auto power	42 - 50 (26 - 31)	79 - 87 (49 - 54)	131 - 139 (81 - 86)	77 - 85 (48 - 53)	45 - 53 (28 - 33)	5 - 13 (3 - 8)

- At half throttle, the accelerator opening is 4/8 of the full opening.

Vehicle Speed When Performing and Releasing Lock-up

ACS007K4

Throttle position	Overdrive control switch (Shift position)	Shift pattern	Vehicle speed km/h (MPH)	
			Lock-up “ON”	Lock-up “OFF”
1/8	ON [D_4]	Comfort	61 - 69 (38 - 43)	51 - 59 (31 - 36)
		Auto power	61 - 69 (38 - 43)	51 - 59 (31 - 36)

Symptom Chart

ACS007K5

Numbers are arranged in order of inspection.
Perform inspections starting with number one and work up.

Items	Symptom	Condition	Diagnostic item	Reference page
No Lock-up Engagement/ TCC Inoperative	Torque converter is not locked up.	ON vehicle	1. Accelerator pedal position sensor	AT-167
			2. Vehicle speed sensor·A/T (Revolution sensor) and vehicle speed sensor·MTR	AT-106, AT-177
			3. Engine speed signal	AT-112
			4. A/T fluid temperature sensor	AT-101
			5. Line pressure test	AT-54
			6. Torque converter clutch solenoid valve	AT-138
			7. Control valve assembly	AT-251
		OFF vehicle	8. Torque converter	AT-271
	Torque converter clutch piston slip.	ON vehicle	1. A/T fluid level	AT-16
			2. Accelerator pedal position sensor	AT-167
			3. Line pressure test	AT-54
			4. Torque converter clutch solenoid valve	AT-138
			5. Line pressure solenoid valve	AT-151
			6. Control valve assembly	AT-251
		OFF vehicle	7. Torque converter	AT-271
	Lock-up point is extremely high or low.	ON vehicle	1. Accelerator pedal position sensor	AT-167
			2. Vehicle speed sensor·A/T (Revolution sensor) and vehicle speed sensor·MTR	AT-106, AT-177
			3. Torque converter clutch solenoid valve	AT-138
			4. Control valve assembly	AT-251
Shift Shock	Sharp shock in shifting from “N” to “D” position.	ON vehicle	1. Engine idling speed	EC-75
			2. Accelerator pedal position sensor	AT-167
			3. Line pressure test	AT-54
			4. A/T fluid temperature sensor	AT-101
			5. Engine speed signal	AT-112
			6. Line pressure solenoid valve	AT-151
			7. Control valve assembly	AT-251
			8. Accumulator N-D	AT-251
		OFF vehicle	9. Forward clutch	AT-322

Items	Symptom	Condition	Diagnostic item	Reference page
Shift Shock	Too sharp a shock in change from D_1 to D_2 .	ON vehicle	1. Accelerator pedal position sensor	AT-167
			2. Line pressure test	AT-54
			3. Accumulator servo release	AT-251
			4. Control valve assembly	AT-251
			5. A/T fluid temperature sensor	AT-101
		OFF vehicle	6. Brake band	AT-343
	Too sharp a shock in change from D_2 to D_3 .	ON vehicle	1. Accelerator pedal position sensor	AT-167
			2. Line pressure test	AT-54
			3. Control valve assembly	AT-251
		OFF vehicle	4. High clutch	AT-316
			5. Brake band	AT-343
	Too sharp a shock in change from D_3 to D_4 .	ON vehicle	1. Accelerator pedal position sensor	AT-167
			2. Line pressure test	AT-54
			3. Control valve assembly	AT-251
		OFF vehicle	4. Brake band	AT-343
			5. Overrun clutch	AT-322
			6. Forward one-way clutch	AT-333
	Gear change shock felt during deceleration by releasing accelerator pedal.	ON vehicle	1. Accelerator pedal position sensor	AT-167
			2. Line pressure test	AT-54
			3. Overrun clutch solenoid valve	AT-172
			4. Control valve assembly	AT-251
	Large shock changing from 1_2 to 1_1 in “1” position.	ON vehicle	1. Control valve assembly	AT-251
		OFF vehicle	2. Low & reverse brake	AT-329
Improper Shift Timing	Too high a gear change point from D_1 to D_2 , from D_2 to D_3 , from D_3 to D_4 .	ON vehicle	1. Accelerator pedal position sensor	AT-167
			2. Vehicle speed sensor·A/T (Revolution sensor) and vehicle speed sensor·MTR	AT-106, AT-177
			3. Shift solenoid valve A	AT-157
			4. Shift solenoid valve B	AT-162
	Gear change directly from D_1 to D_3 occurs.	ON vehicle	1. A/T fluid level	AT-16
			2. Accumulator servo release	AT-251
		OFF vehicle	3. Brake band	AT-343
	Too high a change point from D_4 to D_3 , from D_3 to D_2 , from D_2 to D_1 .	ON vehicle	1. Accelerator pedal position sensor	AT-167
			2. Vehicle speed sensor·A/T (Revolution sensor) and vehicle speed sensor·MTR	AT-106, AT-177
	Kickdown does not operate when depressing accelerator pedal in D_4 within kickdown vehicle speed.	ON vehicle	1. Accelerator pedal position sensor	AT-167
			2. Vehicle speed sensor·A/T (Revolution sensor) and vehicle speed sensor·MTR	AT-106, AT-177
			3. Shift solenoid valve A	AT-157
			4. Shift solenoid valve B	AT-162

Items	Symptom	Condition	Diagnostic item	Reference page
Improper Shift Timing	Kickdown operates or engine overruns when depressing accelerator pedal in D_4 beyond kickdown vehicle speed limit.	ON vehicle	1. Vehicle speed sensor·A/T (Revolution sensor) and vehicle speed sensor·MTR	AT-106, AT-177
			2. Accelerator pedal position sensor	AT-167
			3. Shift solenoid valve A	AT-157
			4. Shift solenoid valve B	AT-162
	Gear change from 2_2 to 2_3 in “2” position.	ON vehicle	1. PNP switch adjustment	AT-255
			2. Control cable adjustment	AT-243
	Gear change from 1_1 to 1_2 in “1” position.	ON vehicle	1.PNP switch adjustment	AT-255
			2. Control cable adjustment	AT-243
No Down Shift	Failure to change gear from D_4 to D_3 .	ON vehicle	1. A/T fluid level	AT-16
			2. Accelerator pedal position sensor	AT-167
			3. Overrun clutch solenoid valve	AT-172
			4. Shift solenoid valve A	AT-157
			5. Line pressure solenoid valve	AT-151
			6. Control valve assembly	AT-251
		OFF vehicle	7. Brake band	AT-343
			8. Overrun clutch	AT-322
	Failure to change gear from D_3 to D_2 or from D_4 to D_2 .	ON vehicle	1. A/T fluid level	AT-16
			2. Accelerator pedal position sensor	AT-167
			3. Shift solenoid valve A	AT-157
			4. Shift solenoid valve B	AT-162
			5. Control valve assembly	AT-251
		OFF vehicle	6. High clutch	AT-316
			7. Brake band	AT-343
	Failure to change gear from D_2 to D_1 or from D_3 to D_1 .	ON vehicle	1. A/T fluid level	AT-16
			2. Accelerator pedal position sensor	AT-167
			3. Shift solenoid valve A	AT-157
			4. Shift solenoid valve B	AT-162
			5. Control valve assembly	AT-251
		OFF vehicle	6. Low one-way clutch	AT-271
			7. High clutch	AT-316
			8. Brake band	AT-343

Items	Symptom	Condition	Diagnostic item	Reference page
No Down Shift	Failure to change from D_3 to 2_2 when shifting selector lever into “2” position. AT-226	ON vehicle	1. Accelerator pedal position sensor	AT-167
			2. Shift solenoid valve B	AT-162
			3. Control valve assembly	AT-251
			4. Control cable adjustment	AT-243
		OFF vehicle	5. Brake band	AT-343
	Does not change from 1_2 to 1_1 in “1” position.	ON vehicle	1. PNP switch adjustment	AT-255
			2. Vehicle speed sensor·A/T (Revolution sensor) and vehicle speed sensor·MTR	AT-106, AT-177
			3. Shift solenoid valve A	AT-157
			4. Control valve assembly	AT-251
			5. Overrun clutch solenoid valve	AT-172
		OFF vehicle	6. Overrun clutch	AT-322
			7. Low & reverse brake	AT-329
No Up Shift	Failure to change gear from D_1 to D_2 .	ON vehicle	1. Control cable adjustment	AT-243
			2. Shift solenoid valve A	AT-157
			3. Control valve assembly	AT-251
			4. Vehicle speed sensor·A/T (Revolution sensor) and vehicle speed sensor·MTR	AT-106, AT-177
			5. Accelerator pedal position sensor	AT-167
		OFF vehicle	6. Brake band	AT-343
	Failure to change gear from D_2 to D_3 .	ON vehicle	1. Control cable adjustment	AT-243
			2. Shift solenoid valve B	AT-162
			3. Control valve assembly	AT-251
			4. Vehicle speed sensor·A/T (Revolution sensor) and vehicle speed sensor·MTR	AT-106, AT-177
			5. Accelerator pedal position sensor	AT-167
		OFF vehicle	6. High clutch	AT-316
			7. Brake band	AT-343

Items	Symptom	Condition	Diagnostic item	Reference page
No Up Shift	Failure to change gear from D3 to D4 .	ON vehicle	1. PNP switch adjustment	AT-255
			2. Overdrive control switch	AT-240
			3. Control cable adjustment	AT-243
			4. Shift solenoid valve A	AT-157
			5. Vehicle speed sensor·A/T (Revolution sensor) and vehicle speed sensor·MTR	AT-106, AT-177
			6. A/T fluid temperature sensor	AT-101
		OFF vehicle	7. Brake band	AT-343
	A/T does not shift to D4 when driving with OD ON. (OD OFF indicator lamp is off.)	ON vehicle	1. Accelerator pedal position sensor	AT-167
			2. PNP switch adjustment	AT-255
			3. Overdrive control switch	AT-240
			4. Vehicle speed sensor·A/T (Revolution sensor) and vehicle speed sensor·MTR	AT-106, AT-177
			5. Shift solenoid valve A	AT-157
			6. Overrun clutch solenoid valve	AT-172
			7. Control valve assembly	AT-251
			8. A/T fluid temperature sensor	AT-101
			9. Line pressure solenoid valve	AT-151
		OFF vehicle	10. Brake band	AT-343
			11. Overrun clutch	AT-322
Slips/Will Not Engage	Vehicle will not run in “R” position (but runs in “D”, “2” and “1” positions). Clutch slips. Very poor acceleration.	ON vehicle	1. Control cable adjustment	AT-243
			2. Stall test	AT-51
			3. Line pressure test	AT-54
			4. Line pressure solenoid valve	AT-151
			5. Control valve assembly	AT-251
		OFF vehicle	6. Reverse clutch	AT-311
			7. High clutch	AT-316
			8. Forward clutch	AT-322
			9. Overrun clutch	AT-322
			10. Low & reverse brake	AT-329
	Vehicle will not run in “D” and “2” positions (but runs in “1” and “R” positions).	ON vehicle	1. Control cable adjustment	AT-243
		OFF vehicle	2. Low one-way clutch	AT-271

Items	Symptom	Condition	Diagnostic item	Reference page
Slips/Will Not Engage	Vehicle will not run in “D”, “1”, “2” positions (but runs in “R” position). Clutch slips. Very poor acceleration.	ON vehicle	1. A/T fluid level	AT-16
			2. Stall test	AT-51
			3. Line pressure test	AT-54
			4. Line pressure solenoid valve	AT-151
			5. Control valve assembly	AT-251
			6. Accumulator N-D	AT-251
		OFF vehicle	7. Reverse clutch	AT-311
			8. High clutch	AT-316
			9. Forward clutch	AT-322
			10. Forward one-way clutch	AT-322
			11. Low one-way clutch	AT-271
	Clutches or brakes slip somewhat in starting.	ON vehicle	1. A/T fluid level	AT-16
			2. Control cable adjustment	AT-243
			3. Accelerator pedal position sensor	AT-167
			4. Line pressure test	AT-54
			5. Line pressure solenoid valve	AT-151
			6. Control valve assembly	AT-251
			7. Accumulator N-D	AT-251
		OFF vehicle	8. Forward clutch	AT-322
			9. Reverse clutch	AT-311
			10. Low & reverse brake	AT-329
			11. Oil pump	AT-290
			12. Torque converter	AT-271
	No creep at all. AT-203, AT-206	ON vehicle	1. A/T fluid level	AT-16
			2. Line pressure test	AT-54
			3. Control valve assembly	AT-251
		OFF vehicle	4. Forward clutch	AT-322
			5. Oil pump	AT-290
			6. Torque converter	AT-271
	Almost no shock or clutches slipping in changing from D_1 to D_2.	ON vehicle	1. A/T fluid level	AT-16
			2. Accelerator pedal position sensor	AT-167
			3. Line pressure test	AT-54
			4. Accumulator servo release	AT-251
			5. Control valve assembly	AT-251
		OFF vehicle	6. Brake band	AT-343

Items	Symptom	Condition	Diagnostic item	Reference page
Slips/Will Not Engage	Almost no shock or slipping in changing from D2 to D3 .	ON vehicle	1. A/T fluid level	AT-16
			2. Accelerator pedal position sensor	AT-167
			3. Line pressure test	AT-54
			4. Control valve assembly	AT-251
		OFF vehicle	5. High clutch	AT-316
			6. Forward clutch	AT-322
	Almost no shock or slipping in changing from D3 to D4 .	ON vehicle	1. A/T fluid level	AT-16
			2. Accelerator pedal position sensor	AT-167
			3. Line pressure test	AT-54
			4. Control valve assembly	AT-251
		OFF vehicle	5. Brake band	AT-343
	Races extremely fast or slips in changing from D4 to D3 when depressing accelerator pedal.	ON vehicle	1. A/T fluid level	AT-16
			2. Accelerator pedal position sensor	AT-167
			3. Line pressure test	AT-54
			4. Line pressure solenoid valve	AT-151
			5. Shift solenoid valve A	AT-157
			6. Control valve assembly	AT-251
		OFF vehicle	7. Brake band	AT-343
			8. Forward clutch	AT-322
	Races extremely fast or slips in changing from D4 to D2 when depressing accelerator pedal.	ON vehicle	1. A/T fluid level	AT-16
			2. Accelerator pedal position sensor	AT-167
			3. Line pressure test	AT-54
			4. Line pressure solenoid valve	AT-151
			5. Shift solenoid valve A	AT-157
			6. Shift solenoid valve B	AT-162
			7. Control valve assembly	AT-251
		OFF vehicle	8. Brake band	AT-343
			9. Forward clutch	AT-322
	Races extremely fast or slips in changing from D3 to D2 when depressing accelerator pedal.	ON vehicle	1. A/T fluid level	AT-16
			2. Accelerator pedal position sensor	AT-167
			3. Line pressure test	AT-54
			4. Line pressure solenoid valve	AT-151
			5. Shift solenoid valve B	AT-162
			6. Control valve assembly	AT-251
		OFF vehicle	7. Brake band	AT-343
			8. High clutch	AT-316

Items	Symptom	Condition	Diagnostic item	Reference page
Slips/Will Not Engage	Races extremely fast or slips in changing from D_4 or D_3 to D_1 when depressing accelerator pedal.	ON vehicle	1. A/T fluid level	AT-16
			2. Accelerator pedal position sensor	AT-167
			3. Line pressure test	AT-54
			4. Line pressure solenoid valve	AT-151
			5. Shift solenoid valve A	AT-157
			6. Shift solenoid valve B	AT-162
			7. Control valve assembly	AT-251
		OFF vehicle	8. Forward clutch	AT-322
			9. Forward one-way clutch	AT-333
			10. Low one-way clutch	AT-271
	Vehicle will not run in any position.	ON vehicle	1. A/T fluid level	AT-16
			2. Control cable adjustment	AT-243
			3. Line pressure test	AT-54
			4. Line pressure solenoid valve	AT-151
		OFF vehicle	5. Oil pump	AT-290
			6. High clutch	AT-316
			7. Brake band	AT-343
			8. Low & reverse brake	AT-329
			9. Torque converter	AT-271
			10. Parking components	AT-263
Others	Engine cannot be started in “P” and “N” positions. AT-198	ON vehicle	1. Ignition switch and starter	PG-2, SC-9
			2. Control cable adjustment	AT-243
			3. PNP switch adjustment	AT-255
	Engine starts in positions other than “P” and “N”.	ON vehicle	1. Control cable adjustment	AT-243
			2. PNP switch adjustment	AT-255
	Transaxle noise in “P“ and “N” positions.	ON vehicle	1. A/T fluid level	AT-16
			2. Line pressure test	AT-54
			3. Accelerator pedal position sensor	AT-167
			4. Vehicle speed sensor·A/T (Revolution sensor) and vehicle speed sensor·MTR	AT-106, AT-177
		OFF vehicle	5. Oil pump	AT-290
			6. Torque converter	AT-271
	Vehicle moves when changing into “P” position or parking gear does not disengage when shifted out of “P” position.	ON vehicle	1. Control cable adjustment	AT-243
		OFF vehicle	2. Parking components	AT-263

Items	Symptom	Condition	Diagnostic item	Reference page
Others	Vehicle runs in "N" position. AT-200	ON vehicle	1. Control cable adjustment	AT-243
		OFF vehicle	2. Forward clutch	AT-322
			3. Reverse clutch	AT-311
			4. Overrun clutch	AT-322
	Vehicle braked when shifting into "R" position.	ON vehicle	1. A/T fluid level	AT-16
			2. Control cable adjustment	AT-243
			3. Line pressure test	AT-54
			4. Line pressure solenoid valve	AT-151
			5. Control valve assembly	AT-251
		OFF vehicle	6. High clutch	AT-316
			7. Brake band	AT-343
			8. Forward clutch	AT-322
			9. Overrun clutch	AT-322
	Excessive creep.	ON vehicle	1. Engine idling speed	EC-75
	Engine stops when shifting lever into "R", "D", "2" and "1" positions.	ON vehicle	1. Engine idling speed	EC-75
			2. A/T fluid level	AT-16
			3. Torque converter clutch solenoid valve	AT-138
			4. Control valve assembly	AT-251
		OFF vehicle	5. Torque converter	AT-271
	Vehicle braked by gear change from D_1 to D_2.	ON vehicle	1. A/T fluid level	AT-16
		OFF vehicle	2. Reverse clutch	AT-311
			3. Low & reverse brake	AT-329
			4. High clutch	AT-316
			5. Low one-way clutch	AT-271
	Vehicle braked by gear change from D_2 to D_3.	ON vehicle	1. A/T fluid level	AT-16
		OFF vehicle	2. Brake band	AT-343
	Vehicle braked by gear change from D_3 to D_4.	ON vehicle	1. A/T fluid level	AT-16
		OFF vehicle	2. Overrun clutch	AT-322
			3. Forward one-way clutch	AT-333
			4. Reverse clutch	AT-311

Items	Symptom	Condition	Diagnostic item	Reference page
Others	Maximum speed not attained. Poor acceleration.	ON vehicle	1. A/T fluid level	AT-16
			2. PNP switch adjustment	AT-255
			3. Overdrive control switch	AT-240
			4. Accelerator pedal position sensor	AT-167
			5. Vehicle speed sensor·A/T (Revolution sensor) and vehicle speed sensor·MTR	AT-106, AT-177
			6. Shift solenoid valve A	AT-157
			7. Shift solenoid valve B	AT-162
			8. Control valve assembly	AT-251
		OFF vehicle	9. Reverse clutch	AT-311
			10. High clutch	AT-316
			11. Brake band	AT-343
			12. Low & reverse brake	AT-329
			13. Oil pump	AT-290
			14. Torque converter	AT-271
	Transaxle noise in “D”, “2”, “1” and “R” positions.	ON vehicle	1. A/T fluid level	AT-16
		OFF vehicle	2. Torque converter	AT-271
	Engine brake does not operate in “1” position.	ON vehicle	1. PNP switch adjustment	AT-255
			2. Control cable adjustment	AT-243
			3. Vehicle speed sensor·A/T (Revolution sensor) and vehicle speed sensor·MTR	AT-106, AT-177
			4. Control valve assembly	AT-251
			5. Overrun clutch solenoid valve	AT-172
		OFF vehicle	6. Overrun clutch	AT-322
			7. Low & reverse brake	AT-329
	Transaxle over-heats.	ON vehicle	1. A/T fluid level	AT-16
			2. Engine idling speed	EC-75
			3. Accelerator pedal position sensor	AT-167
			4. Line pressure test	AT-54
			5. Line pressure solenoid valve	AT-151
			6. Control valve assembly	AT-251
		OFF vehicle	7. Oil pump	AT-290
			8. Reverse clutch	AT-311
			9. High clutch	AT-316
			10. Brake band	AT-343
			11. Forward clutch	AT-322
			12. Overrun clutch	AT-322
			13. Low & reverse brake	AT-329
			14. Torque converter	AT-271

Items	Symptom	Condition	Diagnostic item	Reference page
Others	ATF shoots out during operation. White smoke emitted from exhaust pipe during operation.	ON vehicle	1. A/T fluid level	AT-16
		OFF vehicle	2. Reverse clutch	AT-311
			3. High clutch	AT-316
			4. Brake band	AT-343
			5. Forward clutch	AT-322
			6. Overrun clutch	AT-322
			7. Low & reverse brake	AT-329
	Unusual smell at A/T fluid charging pipe.	ON vehicle	1. A/T fluid level	AT-16
		OFF vehicle	2. Torque converter	AT-271
			3. Oil pump	AT-290
			4. Reverse clutch	AT-311
			5. High clutch	AT-316
			6. Brake band	AT-343
			7. Forward clutch	AT-322
			8. Overrun clutch	AT-322
			9. Low & reverse brake	AT-329

TCM Terminals and Reference Value

ACS007K6

TCM CONNECTOR TERMINAL LAYOUT

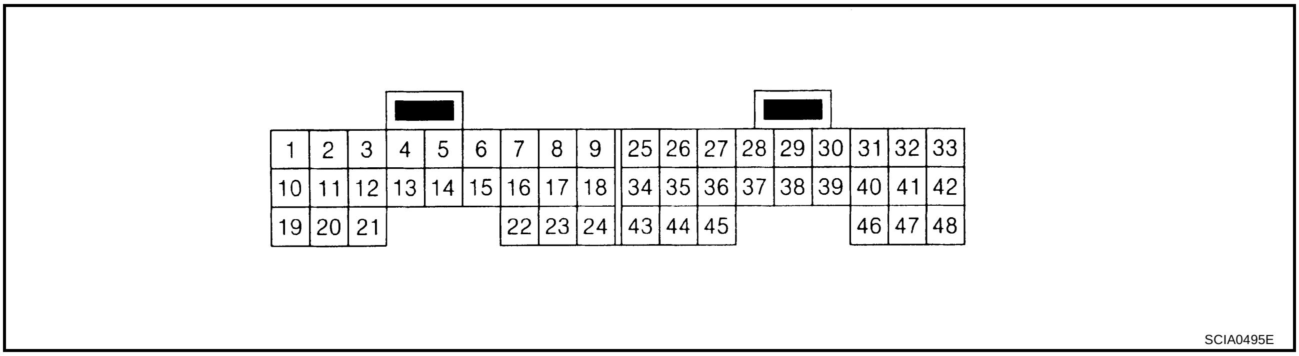

TCM INSPECTION TABLE

Data are reference value and are measured between each terminal and ground.

Terminal	Wire color	Item	Condition		Judgement standard (Approx.)
1	R/W	Line pressure solenoid valve		When releasing accelerator pedal after warming up engine.	1.5 - 3.0 V
				When depressing accelerator pedal fully after warming up engine.	0 V
2	P/B	Line pressure solenoid valve (with dropping resistor)		When releasing accelerator pedal after warming up engine.	5 - 14 V
				When depressing accelerator pedal fully after warming up engine.	0 V
3	GY/R	Torque converter clutch solenoid valve	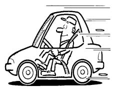	When A/T performs lock-up.	8 - 15 V
				When A/T does not perform lock-up.	0 V
5	G/R	CAN H	—		—
6	GY/R	CAN L	—		—
10	BR/W	Power source	or 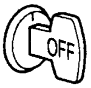	When turning ignition switch ON.	Battery voltage
				When turning ignition switch OFF.	0 V

Terminal	Wire color	Item	Condition		Judgement standard (Approx.)
11	L/W	Shift solenoid valve A	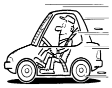	When shift solenoid valve A operates. (When driving in “D1 ” or “D4 ”.)	Battery voltage
				When shift solenoid valve A does not operate. (When driving in “D2 ” or “D3 ”.)	0 V
12	L/Y	Shift solenoid valve B		When shift solenoid valve B operates. (When driving in “D1 ” or “D2 ”.)	Battery voltage
				When shift solenoid valve B does not operate. (When driving in “D3 ” or “D4 ”.)	0 V
19	BR/W	Power source	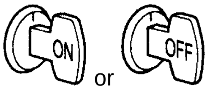 or	Same as No. 10	
20	L/B	Overrun clutch solenoid valve		When overrun clutch solenoid valve operates.	Battery voltage
				When overrun clutch solenoid valve does not operate.	0 V
25	B	Ground	Always		0 V
26	BR/Y	PNP switch “1” position	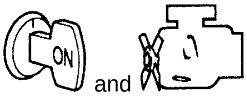 and	When setting selector lever to “1” position.	Battery voltage
				When setting selector lever to other positions.	0 V
27	L	PNP switch “2” position		When setting selector lever to “2” position.	Battery voltage
				When setting selector lever to other positions.	0 V
28	L	Power source (Memory back-up)	Always		Battery voltage
29	W/R	Revolution sensor		When moving at 20 km/h (12 MPH)	450 Hz
				When vehicle parks.	Under 1.3 V or over 4.5 V
30 *2	G/B	CONSULT- II (RX)	—		—
31 *2	W	CONSULT- II (TX)	—		—
32 *1	L	Sensor power	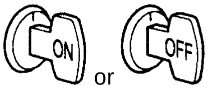 or	When turning ignition switch ON.	4.5 - 5.5 V
				When turning ignition switch OFF.	0 V
34	W/G	PNP switch “D” position	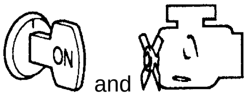 and	When setting selector lever to “D” position.	Battery voltage
				When setting selector lever to other positions.	0 V
35	Y/G	PNP switch “R” position		When setting selector lever to “R” position.	Battery voltage
				When setting selector lever to other positions.	0 V
36	G	PNP switch “N” or “P” position		When setting selector lever to “N” or “P” position.	Battery voltage
				When setting selector lever to other positions.	0 V

Terminal	Wire color	Item	Condition		Judgement standard (Approx.)
39 *1	L/OR	Engine speed signal	and 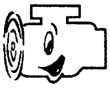	Refer to EC-104, "ECM INSPECTION TABLE" .	
40	L/W	Vehicle speed sensor		When moving vehicle at 2 to 3 km/h (1 to 2 MPH) for 1 m (3 ft) or more.	Voltage varies between less than 0 V and more than 4.5 V
41 *1	G/Y	Accelerator pedal position sensor	and 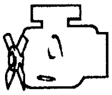	When depressing accelerator pedal slowly after warming up engine. (Voltage rises gradually in response to throttle position.)	Fully-closed throttle: 0.8 V Fully-open throttle: 4.4 V
42 *1	B	Sensor ground	Always		0 V
47	BR	A/T fluid temperature sensor		When ATF temperature is 20°C (68°F).	1.5 V
				When ATF temperature is 80°C (176°F).	0.5 V
48	B	Ground	Always		0 V

*1: These terminals are connected to ECM.

*2: These terminals are connected to data link connector.

CONSULT-II Function (A/T)

ACS007K7

CONSULT-II can display each diagnostic item using the diagnostic test modes shown following.

FUNCTION

Diagnostic test mode	Function	Reference page
Work support	This mode enables a technician to adjust some devices faster and more accurately by following the indications on CONSULT-II.	—
Self-diagnostic results	Self-diagnostic results can be read and erased quickly.	AT-81
Data monitor	Input/Output data in the TCM can be read.	AT-83
CAN diagnostic support monitor	The results of transmit/receive diagnosis of CAN communication can be read.	AT-85
Function test	Performed by CONSULT-II instead of a technician to determine whether each system is “OK” or “NG”.	—
DTC work support	Select the operating condition to confirm Diagnostic Trouble Codes.	AT-85
TCM part number	TCM part number can be read.	—

CONSULT-II REFERENCE VALUE

NOTICE:

1. The CONSULT-II electrically displays shift timing and lock-up timing (that is, operation timing of each solenoid).
   Check for time difference between actual shift timing and the CONSULT-II display. If the difference is noticeable, mechanical parts (except solenoids, sensors, etc.) may be malfunctioning. Check mechanical parts using applicable diagnostic procedures.
2. Shift schedule (which implies gear position) displayed on CONSULT-II and that indicated in Service Manual may differ slightly. This occurs because of the following reasons:
   - Actual shift schedule has more or less tolerance or allowance,
   - Shift schedule indicated in Service Manual refers to the point where shifts start, and
   - Gear position displayed on CONSULT-II indicates the point where shifts are completed.
3. Shift solenoid valve “A” or “B” is displayed on CONSULT-II at the start of shifting. Gear position is displayed upon completion of shifting (which is computed by TCM).

Item name	Condition	Display value (Approx.)
VHCL/S SE-A/T	During driving	Approximately matches the speedometer reading.
VHCL/S SE-MTR		
THRTL POS SEN	When depressing accelerator pedal slowly after warming up engine. (Voltage rises gradually in response to throttle position.)	Fully-closed throttle: 0.8 V
		Fully-open throttle: 4.4 V
FLUID TEMP SE	When ATF temperature is 20°C (68°F).	1.5 V
	When ATF temperature is 80°C (176°F).	0.5 V
BATTERY VOLT	When turning ignition switch to “ON”.	Battery voltage
ENGINE SPEED	Engine running	Approximately matches the tachometer reading.
OVERDRIVE SW	When OD OFF indicator lamp is off.	ON
	When OD OFF indicator lamp is on.	OFF
PN POSI SW	When setting selector lever to “N” or “P” position.	ON
	When setting selector lever to other positions.	OFF
R POSITION SW	When setting selector lever to “R” position.	ON
	When setting selector lever to other positions.	OFF
D POSITION SW	When setting selector lever to “D” position.	ON
	When setting selector lever to other positions.	OFF

Item name	Condition	Display value (Approx.)
2 POSITION SW	When setting selector lever to “2” position.	ON
	When setting selector lever to other positions.	OFF
1 POSITION SW	When setting selector lever to “1” position.	ON
	When setting selector lever to other positions.	OFF
CLOSED THL/SW	Released accelerator pedal.	ON
	Fully depressed accelerator pedal.	OFF
W/O THRL/P-SW	Fully depressed accelerator pedal.	ON
	Released accelerator pedal.	OFF
SHIFT S/V A	When shift solenoid valve A operates. (When driving in “D_1 ” or “D_4 ”.)	ON
	When shift solenoid valve A does not operate. (When driving in “D_2 ” or “D_3 ”.)	OFF
SHIFT S/V B	When shift solenoid valve B operates. (When driving in “D_1 ” or “D_2 ”.)	ON
	When shift solenoid valve B does not operate. (When driving in “D_3 ” or “D_4 ”.)	OFF
OVERRUN/C S/V	When overrun clutch solenoid valve operates.	ON
	When overrun clutch solenoid valve does not operate.	OFF
BRAKE SW	Depressed brake pedal.	ON
	Released brake pedal.	OFF
GEAR	During driving	1, 2, 3, 4
SLCT LVR POSI	When setting selector lever to “N” or “P” position.	N · P
	When setting selector lever to “R” position.	R
	When setting selector lever to “D” position.	D
	When setting selector lever to “2” position.	2
	When setting selector lever to “1” position.	1
VEHICLE SPEED	During driving	Approximately matches the speedometer reading.
LINE PRES DTY	Small throttle opening (Low line pressure) ⇔ Large throttle opening (High line pressure)	0% ⇔ 92%
TCC S/V DUTY	Lock-up OFF ⇔ Lock-up ON	4% ⇔ 94%

CONSULT-II SETTING PROCEDURE

CAUTION:

If CONSULT-II is used with no connection of CONSULT-II CONVERTER, malfunctions might be detected in self-diagnosis depending on control unit which carry out CAN communication.

- For details, refer to the separate “CONSULT-II Operations Manual”.

1. Turn ignition switch OFF.
2. Connect CONSULT-II and CONSULT-II CONVERTER to data link connector, which is located in instrument driver lower panel.
3. Turn ignition switch ON. (Do not start engine.)

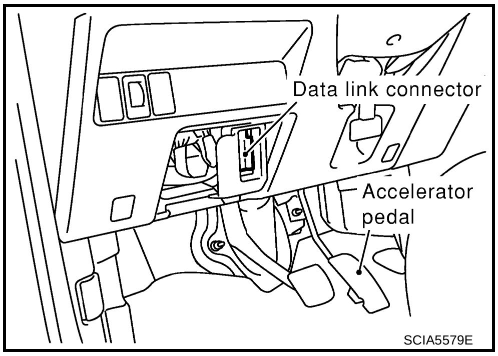

4. Touch “START (NISSAN BASED VHCL)”.

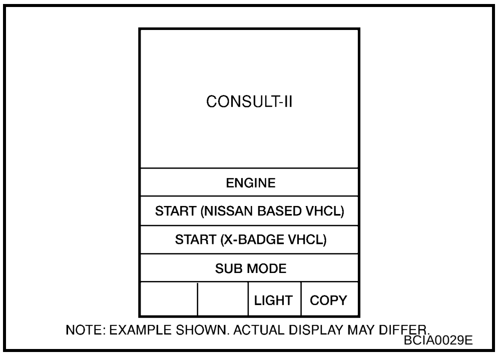

5. Touch “A/T”.
   If “A/T” is not indicated, go to GI-38, "CONSULT-II Data Link Connector (DLC) Circuit" .
6. Perform each diagnostic test mode according to each service procedure.

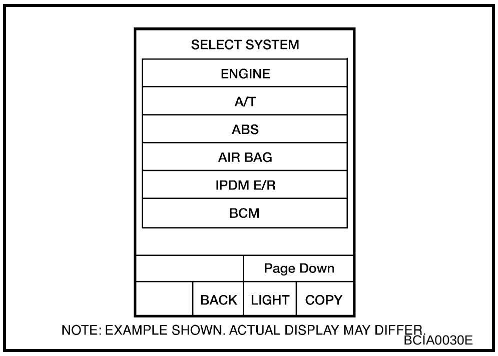

SELF-DIAGNOSTIC RESULT MODE

After performing AT-89, "Diagnostic Procedure Without CONSULT-II" , place check marks for results on the AT-46, "DIAGNOSTIC WORKSHEET" . Reference pages are provided following the items.

Operation Procedure

1. Perform AT-81, "CONSULT-II SETTING PROCEDURE" .
2. Touch “SELF-DIAG RESULTS”.
   Display shows malfunction experienced since the last erasing operation.

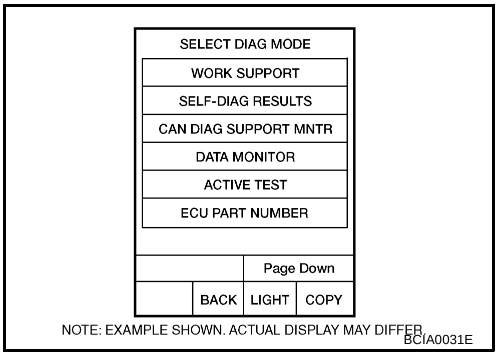

A B AT D E F G H I J K L M

Display Items List

Items (CONSULT-II screen terms)	Malfunction is detected when...	Reference page
CAN COMM CIRCUIT	● Malfunction is detected in CAN communication line.	AT-93
VHCL SPEED SEN-A/T	● TCM does not receive the proper voltage signal from the sensor.	AT-106
VHCL SPEED SEN-MTR		AT-177
THROTTLE POSI SEN	● TCM receives an excessively low or high voltage from this sensor	AT-167
SHIFT SOLENOID/V A	● TCM detects an improper voltage drop when it tries to operate the solenoid valve.	AT-157
SHIFT SOLENOID/V B	● TCM detects an improper voltage drop when it tries to operate the solenoid valve.	AT-162
OVERRUN CLUTCH S/V	● TCM detects an improper voltage drop when it tries to operate the solenoid valve.	AT-172
T/C CLUTCH SOL/V	● TCM detects an improper voltage drop when it tries to operate the solenoid valve.	AT-138
ATF TEMP SEN/CIRC	● TCM receives an excessively low or high voltage from the sensor.	AT-101
BATT/FLUID TEMP SEN		AT-181
ENGINE SPEED SIG	● TCM does not receive the proper voltage signal from the ECM.	AT-112
A/T 1ST GR FNCTN	● A/T cannot be shifted to the 1st gear position even if electrical circuit is good.	AT-116
A/T 2ND GR FNCTN	● A/T cannot be shifted to the 2nd gear position even if electrical circuit is good.	AT-121
A/T 3RD GR FNCTN	● A/T cannot be shifted to the 3rd gear position even if electrical circuit is good.	AT-126
A/T 4TH GR FNCTN	● A/T cannot be shifted to the 4th gear position even if electrical circuit is good.	AT-131
A/T TCC S/V FNCTN	● A/T cannot perform lock-up even if electrical circuit is good.	AT-143
LINE PRESSURE S/V	● TCM detects an improper voltage drop when it tries to operate the solenoid valve.	AT-151
CONTROL UNIT(RAM)	● TCM memory (RAM) is malfunctioning	AT-191
CONTROL UNIT(ROM)	● TCM memory (ROM) is malfunctioning	AT-191
CONT UNIT(EEPROM)	● TCM memory (EEP ROM) is malfunctioning.	AT-192
PNP SW/CIRC	● TCM does not receive the correct voltage signal (based on the gear position) from the switch.	AT-96
INITIAL START	● This is not a malfunction message (Whenever shutting off a power supply to the TCM, this message appears on the screen). Refer to AT-187, "MAIN POWER SUPPLY AND GROUND CIRCUIT" .	AT-187
No failure (NO SELF DIAGNOSTIC FAILURE INDICATED FURTHER TESTING MAY BE REQUIRED)	● No failure has been detected.	—

How to Erase Self-Diagnostic Results

1. Perform AT-81, "CONSULT-II SETTING PROCEDURE" .
2. Touch “SELF-DIAG RESULTS”.

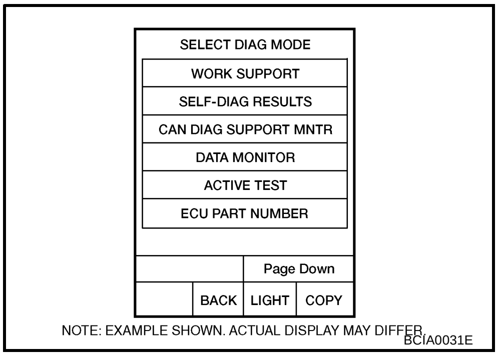

3. Touch ”ERASE”. (The self-diagnostic results will be erased.)

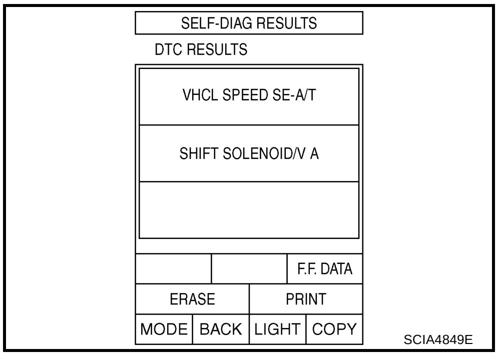

DATA MONITOR MODE

Operation Procedure

1. Perform AT-81, "CONSULT-II SETTING PROCEDURE" .
2. Touch “DATA MONITOR”.

   NOTE:
   When malfunction is detected, CONSULT-II performs “REAL-TIME DIAGNOSIS”. Also, any malfunction detected while in this mode will be displayed at real time.

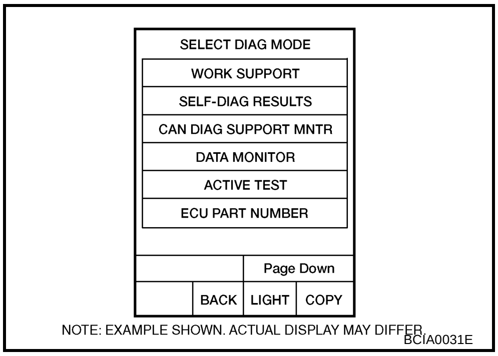

Display Items List

X: Standard, —: Not applicable, ▼: Option

Monitor item (Unit)	SELECT MONITOR ITEM			Remarks
	TCM INPUT SIGNALS	MAIN SIGNALS	SELECTION FROM MENU	
VHCL/S SE-A/T (km/h)	X	—	▼	Revolution sensor
VHCL/S SE-MTR (km/h)	X	—	▼	Vehicle speed display may not be accurate under approx. 10 km/h (6 mph). It may not indicate 0 km/h (0 mph) when vehicle is stationary.
THRTL POS SEN (V)	X	—	▼	
FLUID TEMP SE (V)	X	—	▼	
BATTERY VOLT (V)	X	—	▼	
ENGINE SPEED (rpm)	X	X	▼	

Monitor item (Unit)	SELECT MONITOR ITEM			Remarks
	TCM INPUT SIGNALS	MAIN SIGNALS	SELECTION FROM MENU	
TURBINE REV (rpm)	X	—	▼	
OVERDRIVE SW (ON/OFF)	X	—	▼	
PN POSI SW (ON/OFF)	X	—	▼	
R POSITION SW (ON/OFF)	X	—	▼	
D POSITION SW (ON/OFF)	X	—	▼	
2 POSITION SW (ON/OFF)	X	—	▼	
1 POSITION SW (ON/OFF)	X	—	▼	
ASCD·CRUISE (ON/OFF)	X	—	▼	Signal input with CAN communication.
ASCD·OD CUT (ON/OFF)	X	—	▼	
KICKDOWN SW (ON/OFF)	X	—	▼	Not mounted but displayed.
POWERSHIFT SW (ON/OFF)	X	—	▼	
CLOSED THL/SW (ON/OFF)	X	—	▼	Signal input with CAN communication.
W/O THRL/P-SW (ON/OFF)	X	—	▼	
*SHIFT S/V A (ON/OFF)	—	—	▼	Displays status of check signal (reinput signal) for TCM control signal output. Remains unchanged when solenoid valves are open or shorted.
*SHIFT S/V B (ON/OFF)	—	—	▼	
*OVERRUN/C S/V (ON/OFF)	—	—	▼	
HOLD SW (ON/OFF)	X	—	▼	Not mounted but displayed.
BRAKE SW (ON/OFF)	X	—	▼	Stop lamp switch
GEAR	—	X	▼	Gear position recognized by the TCM updated after gear-shifting
SLCT LVR POSI	—	X	▼	Selector lever position is recognized by the TCM. For fail-safe operation, the specific value used for control is displayed.
VEHICLE SPEED (km/h)	—	X	▼	Vehicle speed recognized by the TCM.
THROTTLE POSI (0.0/8)	—	X	▼	Degree of opening for accelerator recognized by the TCM For fail-safe operation, the specific value used for control is displayed.
LINE PRES DTY (%)	—	X	▼	
TCC S/V DUTY (%)	—	X	▼	
SHIFT S/V A (ON/OFF)	—	X	▼	
SHIFT S/V B (ON/OFF)	—	X	▼	
OVERRUN/C S/V (ON/OFF)	—	X	▼	
SELF-D DP LMP (ON/OFF)	—	X	▼	
TC SLIP RATIO (0.000)	—	—	▼	
TC SLIP SPEED (rpm)	—	—	▼	Difference between engine speed and torque converter input shaft speed
Voltage (V)	—	—	▼	Displays the value measured by the voltage probe.

Monitor item (Unit)	SELECT MONITOR ITEM			Remarks
	TCM INPUT SIGNALS	MAIN SIG-NALS	SELEC-TION FROM MENU	
Frequency (Hz)	—	—	▼	The value measured by the pulse probe is displayed.
DUTY·HI (high) (%)	—	—	▼	
DUTY·LOW (low) (%)	—	—	▼	
PLS WIDTH·HI (ms)	—	—	▼	
PLS WIDTH·LOW (ms)	—	—	▼	

CAN DIAGNOSTIC SUPPORT MONITOR MODE

Operation Procedure

1. Perform AT-81, "CONSULT-II SETTING PROCEDURE" .
2. Touch “CAN DIAG SUPPORT MNTR”. Refer to LAN-13, "CAN Diagnostic Support Monitor" .

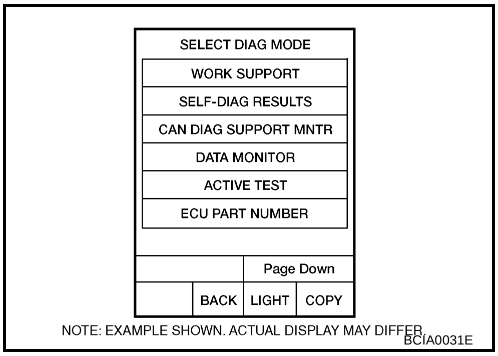

DTC WORK SUPPORT MODE

Operation Procedure

1. Perform AT-81, "CONSULT-II SETTING PROCEDURE" .
2. Touch “DTC WORK SUPPORT”.

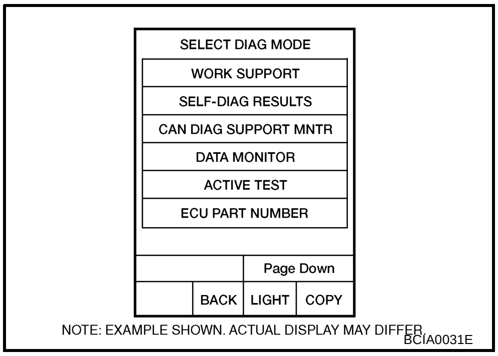

3. Touch select item menu (1ST, 2ND, etc.).

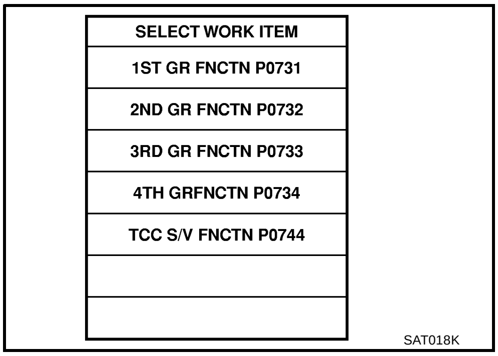

4. Touch “START”.

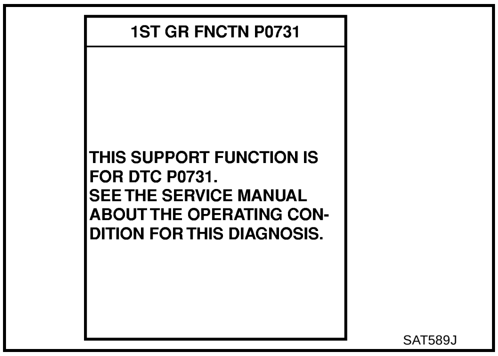

5. Perform driving test according to “DTC Confirmation Procedure” in “TROUBLE DIAGNOSIS FOR DTC”.

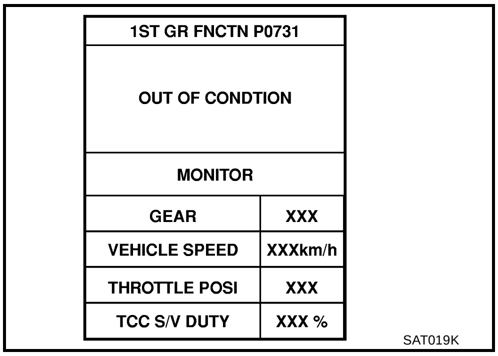

- **When testing conditions are satisfied, CONSULT-II screen changes from “OUT OF CONDITION” to “TESTING”.**

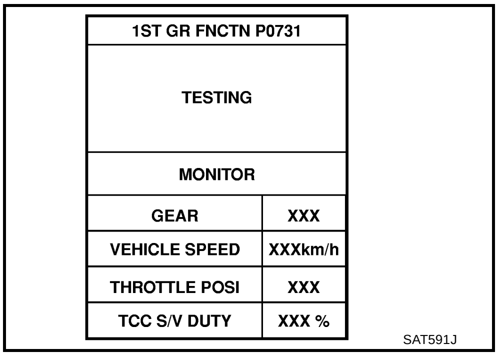

6. Stop vehicle.

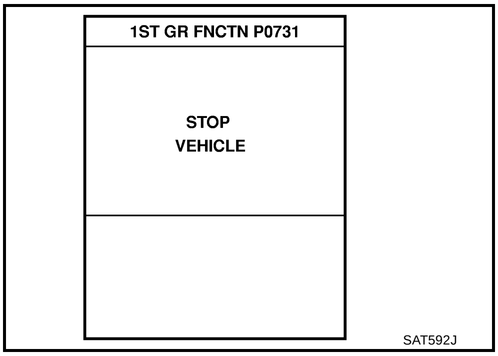

- **If “NG” appears on the screen, malfunction may exist. Go to “Diagnostic Procedure”.**

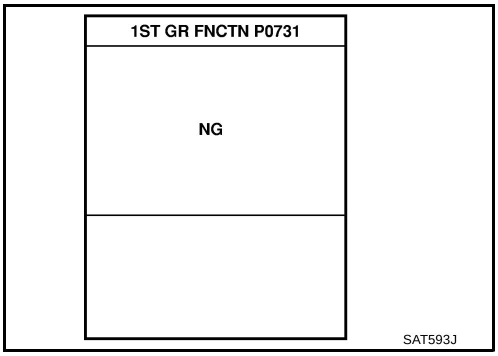

7. Perform test drive to check gear shift feeling in accordance with the instructions displayed.

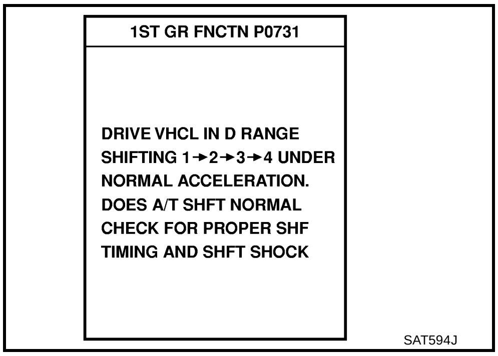

SAT594J

8. Touch “YES” or “NO”.

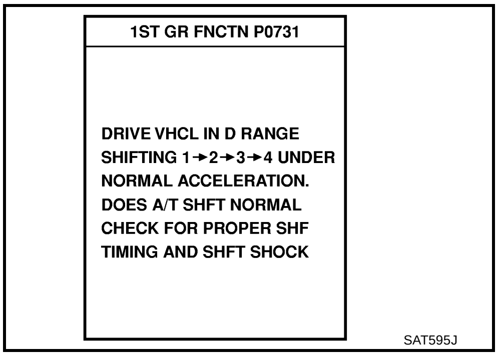

SAT595J

9. CONSULT-II procedure ended.

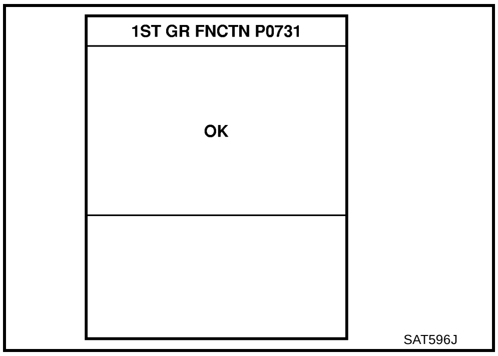

SAT596J

- **If “NG” appears on the screen, malfunction may exist. Go to “Diagnostic Procedure”.**

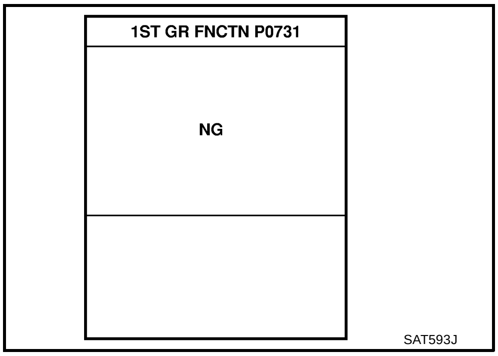

SAT593J

Display Items List

DTC work support item	Description	Check item
1ST GR FNCTN P0731	Following items for “A/T 1st gear function (P0731)” can be confirmed. ● Self-diagnosis status (whether the diagnosis is being performed or not) ● Self-diagnostic results (OK or NG)	● Shift solenoid valve A ● Shift solenoid valve B ● Each clutch ● Hydraulic control circuit
2ND GR FNCTN P0732	Following items for “A/T 2nd gear function (P0732)” can be confirmed. ● Self-diagnosis status (whether the diagnosis is being performed or not) ● Self-diagnostic results (OK or NG)	● Shift solenoid valve B ● Each clutch ● Hydraulic control circuit
3RD GR FNCTN P0733	Following items for “A/T 3rd gear function (P0733)” can be confirmed. ● Self-diagnosis status (whether the diagnosis is being performed or not) ● Self-diagnostic results (OK or NG)	● Shift solenoid valve A ● Each clutch ● Hydraulic control circuit
4TH GR FNCTN P0734	Following items for “A/T 4th gear function (P0734)” can be confirmed. ● Self-diagnosis status (whether the diagnosis is being performed or not) ● Self-diagnostic results (OK or NG)	● Shift solenoid valve A ● Shift solenoid valve B ● Overrun clutch solenoid valve ● Line pressure solenoid valve ● Each clutch ● Hydraulic control circuit
TCC S/V FNCTN P0744	Following items for “A/T TCC S/V function (lock-up) (P0744)” can be confirmed. ● Self-diagnosis status (whether the diagnosis is being performed or not) ● Self-diagnostic results (OK or NG)	● Torque converter clutch solenoid valve ● Each clutch ● Hydraulic control circuit

Diagnostic Procedure Without CONSULT-II

ACS007K8

TCM SELF-DIAGNOSTIC PROCEDURE

A
B
AT
D
E
F
G
H
I
J
K
L
M

If a malfunction occurs in electrical system, turning ignition switch ON will illuminate OD OFF indicator lamp for 2 seconds. To detect a malfunction, entering a self-diagnosis start signal retrieves information on malfunctions from memory and indicates malfunction by blinking OD OFF indicator lamp.

Diagnostic Procedure

1. CHECK OD OFF INDICATOR LAMP

1. Park vehicle on flat surface.
2. Move selector lever to “P” position.
3. Turn ignition switch OFF. Wait at least 5 seconds.

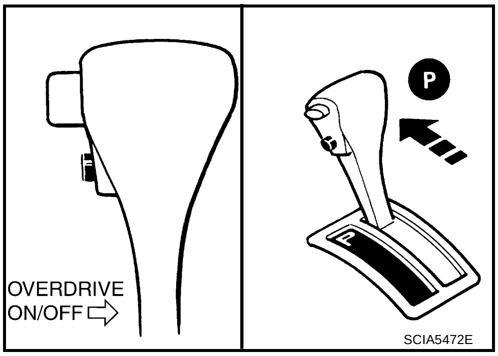

SCIA5472E

4. Turn ignition switch ON. (Do not start engine.)

Does OD OFF indicator lamp come on about 2 seconds?

YES >> GO TO 2.
NO >> Stop procedure. Perform AT-196, "OD OFF Indicator Lamp Does Not Come On" before proceeding.

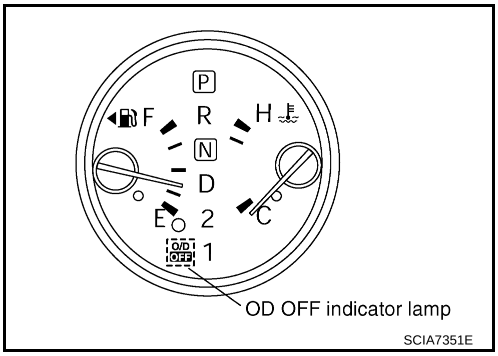

SCIA7351E

2. JUDGEMENT PROCEDURE STEP 1

1. Turn ignition switch OFF.
2. Keep pressing shift lock release button.
3. Move selector lever from “P” to “D” position.
4. Turn ignition switch ON. (Do not start engine.)
5. Keep pressing overdrive control switch while OD OFF indicator lamp is lighting up for 2 seconds. (OD OFF indicator lamp is on.)
6. Keep pressing overdrive control switch and shift selector lever to the position “2”. (OD OFF indicator lamp is on.)
7. Stop pressing overdrive control switch. (OD OFF indicator lamp is on.)
8. Shift selector lever to the position “1”. (OD OFF indicator lamp is on.)
9. Keep pressing overdrive control switch. (OD OFF indicator lamp is off.)
10. Depress accelerator pedal fully while pressing overdrive control switch.

>> GO TO 3.

3. CHECK SELF-DIAGNOSIS CODE

Check OD OFF indicator lamp. Refer to AT-90, "JUDGEMENT OF SELF-DIAGNOSIS CODE" .

>> **DIAGNOSIS END**

JUDGEMENT OF SELF-DIAGNOSIS CODE

<table>
<tr><th colspan="2">OD OFF indicator lamp</th></tr>
<tr>
<td>All judgement flickers are the same.
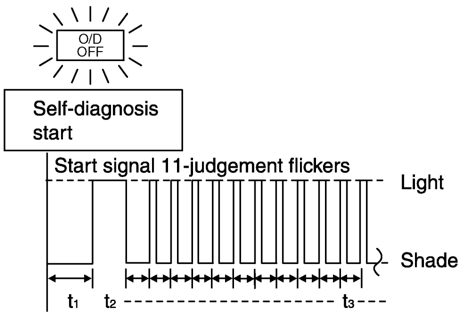
SCIA4672E
All circuits that can be confirmed by self-diagnosis are OK.</td>
<td>1st judgement flicker is longer than others.
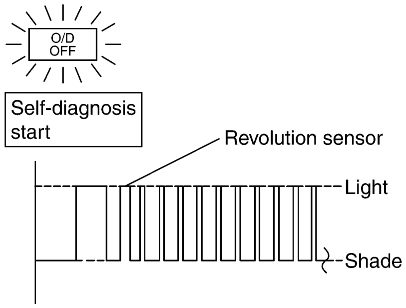
SCIA5591E
Revolution sensor circuit is short-circuited or disconnected.
⇒ Go to DTC P0720 VEHICLE SPEED SENSOR·A/T (REVOLUTION SENSOR).
Refer to AT-106</td>
</tr>
<tr>
<td>2nd judgement flicker is longer than others.
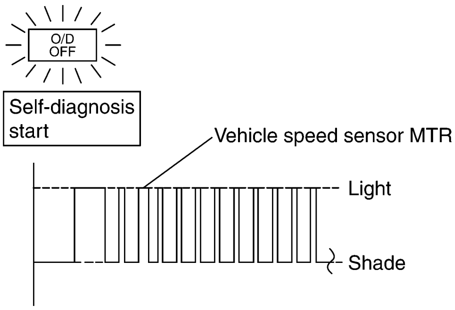
SCIA5592E
Vehicle speed sensor circuit is short-circuited or disconnected.
⇒ Go to DTC VEHICLE SPEED SENSOR·MTR.
Refer to AT-177</td>
<td>3rd judgement flicker is longer than others.
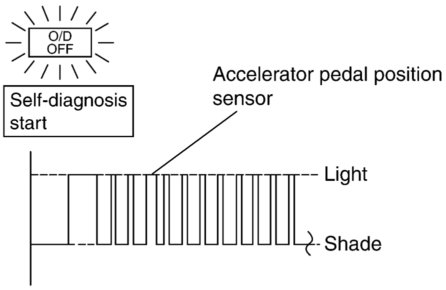
SCIA7386E
Accelerator pedal position sensor circuit is short-circuited or disconnected.
⇒ Go to DTC P1705 ACCELERATOR PEDAL POSITION (APP) SENSOR.
Refer to AT-167</td>
</tr>
<tr>
<td>4th judgement flicker is longer than others.
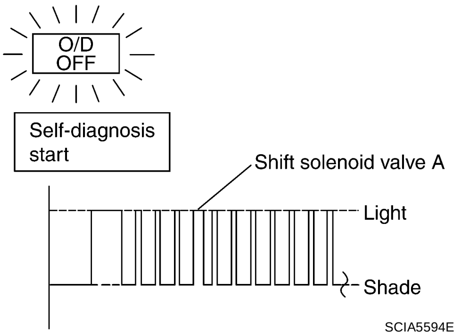
SCIA5594E
Shift solenoid valve A circuit is short-circuited or disconnected.
⇒ Go to DTC P0750 SHIFT SOLENOID VALVE A.
Refer to AT-157</td>
<td>5th judgement flicker is longer than others.
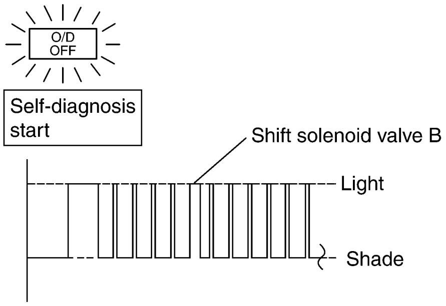
SCIA5595E
Shift solenoid valve B circuit is short-circuited or disconnected.
⇒ Go to DTC P0755 SHIFT SOLENOID VALVE B.
Refer to AT-162</td>
</tr>
</table>

OD OFF indicator lamp	
6th judgement flicker is longer than others. 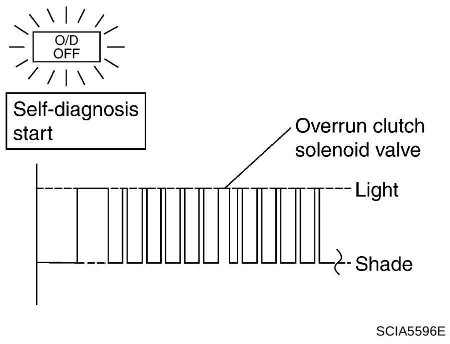 Overrun clutch solenoid valve circuit is short-circuited or disconnected. ⇒ **Go to DTC P1760 OVERRUN CLUTCH SOLENOID VALVE.** Refer to AT-172	7th judgement flicker is longer than others. 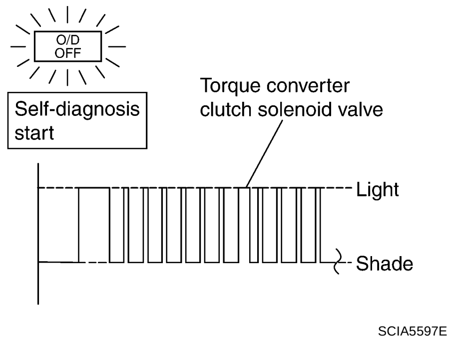 Torque converter clutch solenoid valve circuit is short-circuited or disconnected. ⇒ **Go to DTC P0740 TORQUE CONVERTER CLUTCH SOLENOID VALVE.** Refer to AT-138
8th judgement flicker is longer than others. 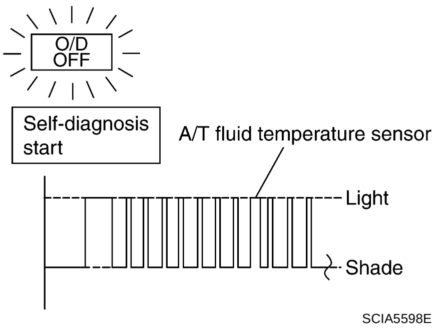 A/T fluid temperature sensor is disconnected or TCM power supply circuit is damaged. ⇒ **Go to DTC BATT/FLUID TEMP SEN (A/T FLUID TEMP SENSOR CIRCUIT AND TCM POWER SOURCE).** Refer to AT-181	9th judgement flicker is longer than others. 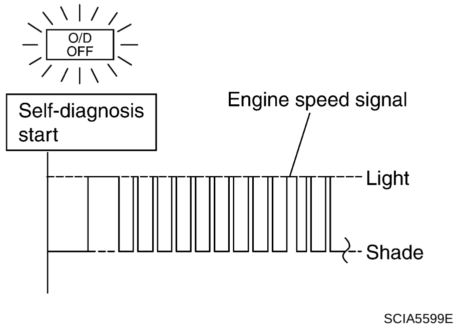 Engine speed signal circuit is short-circuited or disconnected. ⇒ **Go to DTC P0725 ENGINE SPEED SIGNAL.** Refer to AT-112

OD OFF indicator lamp	
10th judgement flicker is longer than others. 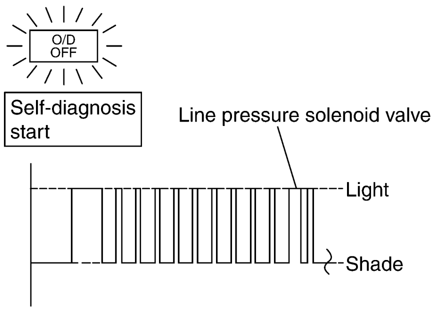 SCIA5600E Line pressure solenoid valve circuit is short-circuited or discon-nected. ⇒ **Go to DTC P0745 LINE PRESSURE SOLENOID VALVE.** Refer to AT-151	11th judgement flicker is longer than others. 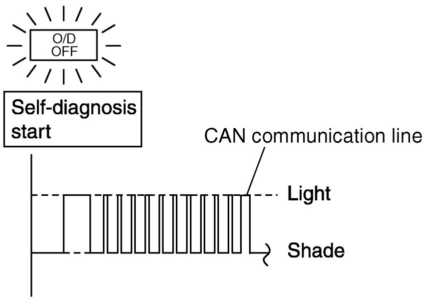 SCIA4673E CAN communication line is damaged. ⇒**Go to DTC U1000 CAN COMMUNICATION LINE.** Refer to AT-93
Lamp comes off. 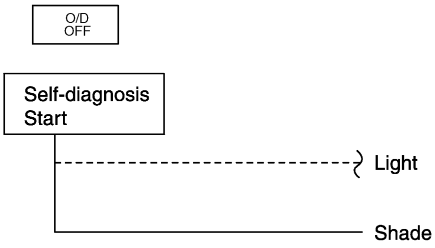 SCIA4674E PNP switch, overdrive control switch, closed throttle position sig-nal or wide open throttle position signal circuit is disconnected or TCM is damaged. (Because closed throttle position signal and wide open throttle position signal are input via CAN communication line malfunction may continue after self-diagnosis.) ⇒ **Go to TCM Self-diagnosis Does Not Activate** Refer to AT-235	Flickers as shown below. 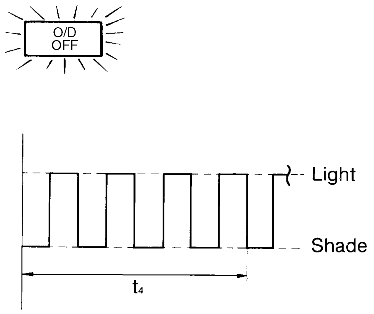 SCIA4675E Battery power is low. Battery has been disconnected for a long time. Battery is connected conversely. (When reconnecting TCM connectors.—This is not a malfunc-tion). ⇒**Go to MAIN POWER SUPPLY AND GROUND CIRCUIT.** Refer to AT-187

t_1 = 2.5 seconds t_2 = 2.0 seconds t_3 = 1.0 second t_4 = 1.0 second

HOW TO ERASE SELF-DIAGNOSTIC RESULTS

1. If the ignition switch stays ON after repair work, be sure to turn ignition switch OFF once. Wait for at least 5 seconds and then turn it ON again.
2. Perform AT-89, "Diagnostic Procedure Without CONSULT-II" .
3. Turn ignition switch OFF. (The self-diagnostic results will be erased.)

DTC U1000 CAN COMMUNICATION LINE

PFP:31940

Description

ACS007QZ

CAN (Controller Area Network) is a serial communication line for real time application. It is an on-vehicle multiplex communication line with high data communication speed and excellent malfunction detection ability. Many electronic control units are equipped onto a vehicle, and each control unit shares information and links with other control units during operation (not independent). In CAN communication, control units are connected with 2 communication lines (CAN H line, CAN L line) allowing a high rate of information transmission with less wiring. Each control unit transmits/receives data but selectively reads required data only.

On Board Diagnosis Logic

ACS007R0

- This is an OBD-II self-diagnostic item.
- Diagnostic trouble code “CAN COMM CIRCUIT” with CONSULT-II or 11th judgement flicker without CONSULT-II is detected when TCM does not receive the correct voltage signal from the switch based on the gear position.

Possible Cause

ACS007R1

Harness or connectors
(CAN communication line is open or shorted.)

DTC Confirmation Procedure

ACS007R2

CAUTION:

If performing this “DTC Confirmation Procedure” again, always turn ignition switch OFF and wait at least 10 seconds before continuing.

After the repair, perform the following procedure to confirm the malfunction is eliminated.

WITH CONSULT-II

1. Turn ignition switch ON. (Do not start engine.)
2. Select “DATA MONITOR” mode for “A/T” with CONSULT-II.
3. Wait at least 6 seconds or start engine and wait for at least 6 seconds.
4. If DTC is detected, go to AT-95, "Diagnostic Procedure" .

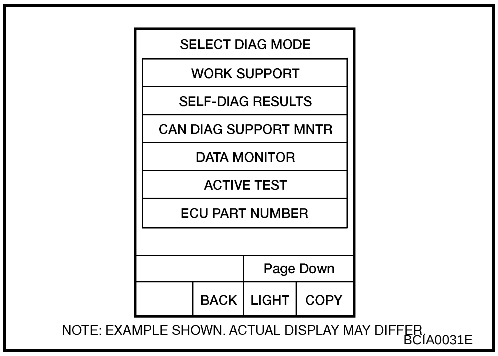

WITH GST

Follow the procedure “WITH CONSULT-II”

WITHOUT CONSULT-II

1. Turn ignition switch ON. (Do not start engine.)
2. Wait at least 6 seconds or start engine and wait at least 6 seconds.
3. Perform self-diagnosis. Refer to AT-89, "Diagnostic Procedure Without CONSULT-II" .
4. If DTC is detected, go to AT-95, "Diagnostic Procedure" .

Wiring Diagram — AT — CAN

ACS007R3

AT-CAN-01

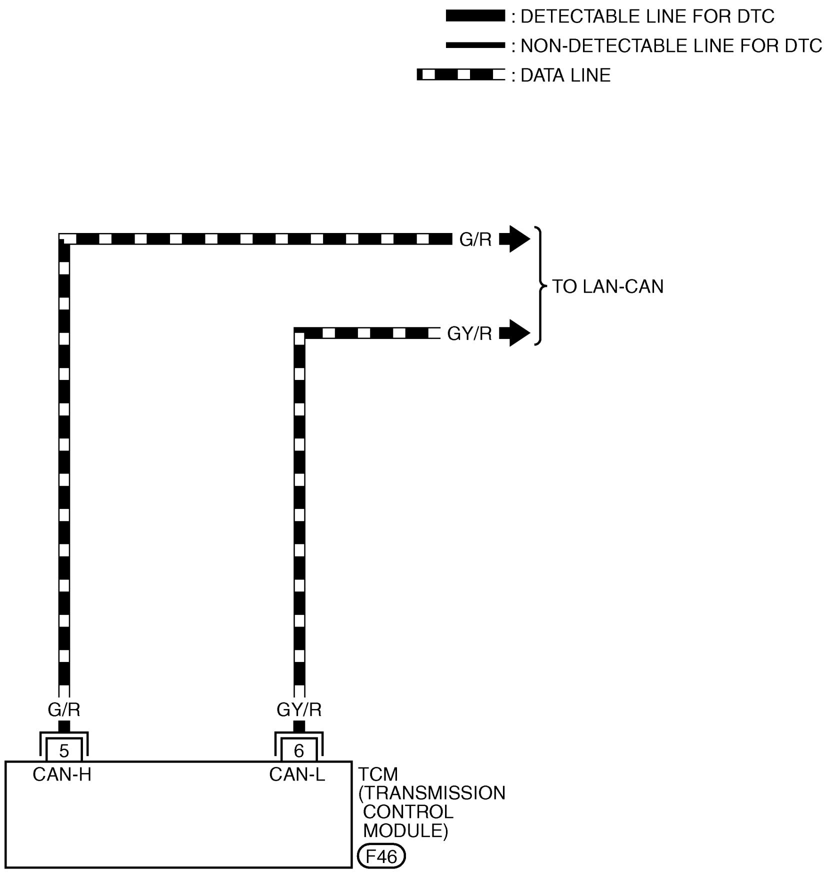

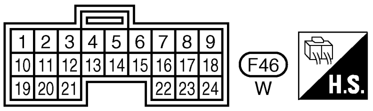

TCWA0234E

Data are reference value and are measured between each terminal and ground.

Terminal	Wire color	Item	Condition	Judgement standard (Approx.)
5	G/R	CAN H	—	—
6	GY/R	CAN L	—	—

Diagnostic Procedure

ACS007R4

1. CHECK CAN COMMUNICATION CIRCUIT

With CONSULT-II

1. Turn ignition switch ON and start engine.
2. Select “SELF-DIAG RESULTS” mode for “A/T” with CONSULT-II.

Is any malfunction of the “CAN COMM CIRCUIT” indicated?

YES >> Print out CONSULT-II screen, Go to LAN section. Refer to LAN-4, "TROUBLE DIAGNOSES WORK FLOW" .

NO >> **INSPECTION END**

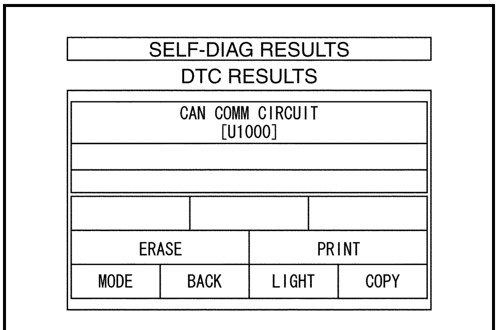

PCIA0061E

A B AT D E F G H I J K L M

DTC P0705 PARK/NEUTRAL POSITION (PNP) SWITCH

PFP:32006

Description

ACS007R5

- The PNP switch assembly includes a transaxle range switch.
- The transaxle range switch detects the selector lever position and sends a signal to the TCM.

CONSULT-II Reference Value

ACS007Z0

Item name	Condition	Display value
PN POSI SW	When setting selector lever to “N” or “P” position.	ON
	When setting selector lever to other positions.	OFF
R POSITION SW	When setting selector lever to “R” position.	ON
	When setting selector lever to other positions.	OFF
D POSITION SW	When setting selector lever to “D” position.	ON
	When setting selector lever to other positions.	OFF
2 POSITION SW	When setting selector lever to “2” position.	ON
	When setting selector lever to other positions.	OFF
1 POSITION SW	When setting selector lever to “1” position.	ON
	When setting selector lever to other positions.	OFF

On Board Diagnosis Logic

ACS007R6

- This is an OBD-II self-diagnostic item.
- Diagnostic trouble code “PNP SW/CIRC” with CONSULT-II is detected when TCM does not receive the correct voltage signal from the switch based on the gear position.

Possible Cause

ACS007R7

- Harness or connectors
  (PNP switch circuit is open or shorted.)
- PNP switch

DTC Confirmation Procedure

ACS007R8

CAUTION:

- **Always drive vehicle at a safe speed.**
- **If performing this “DTC Confirmation Procedure” again, always turn ignition switch OFF and wait at least 10 seconds before continuing.**

After the repair, perform the following procedure to confirm the malfunction is eliminated.

WITH CONSULT-II

1. Turn ignition switch ON. (Do not start engine.)
2. Select “DATA MONITOR” mode for “A/T” with CONSULT-II.
3. Start engine and maintain the following conditions for at least 5 consecutive seconds.
   VEHICLE SPEED: 10 km/h (6 MPH) or more
   THRTL POS SEN: More than 1.3 V
   SLCT LVR POSI: “D” position (OD ON or OFF)
4. If the check result is NG, go to AT-99, "Diagnostic Procedure" .

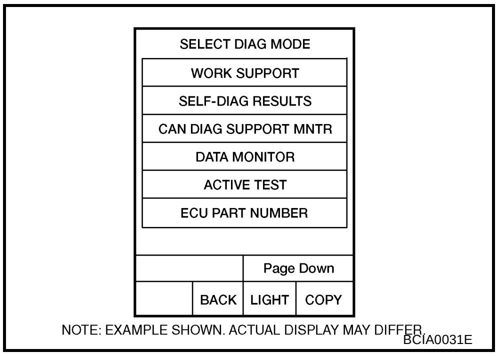

WITH GST

Follow the procedure “WITH CONSULT-II”.

Wiring Diagram — AT — PNP/SW

ACS007WU

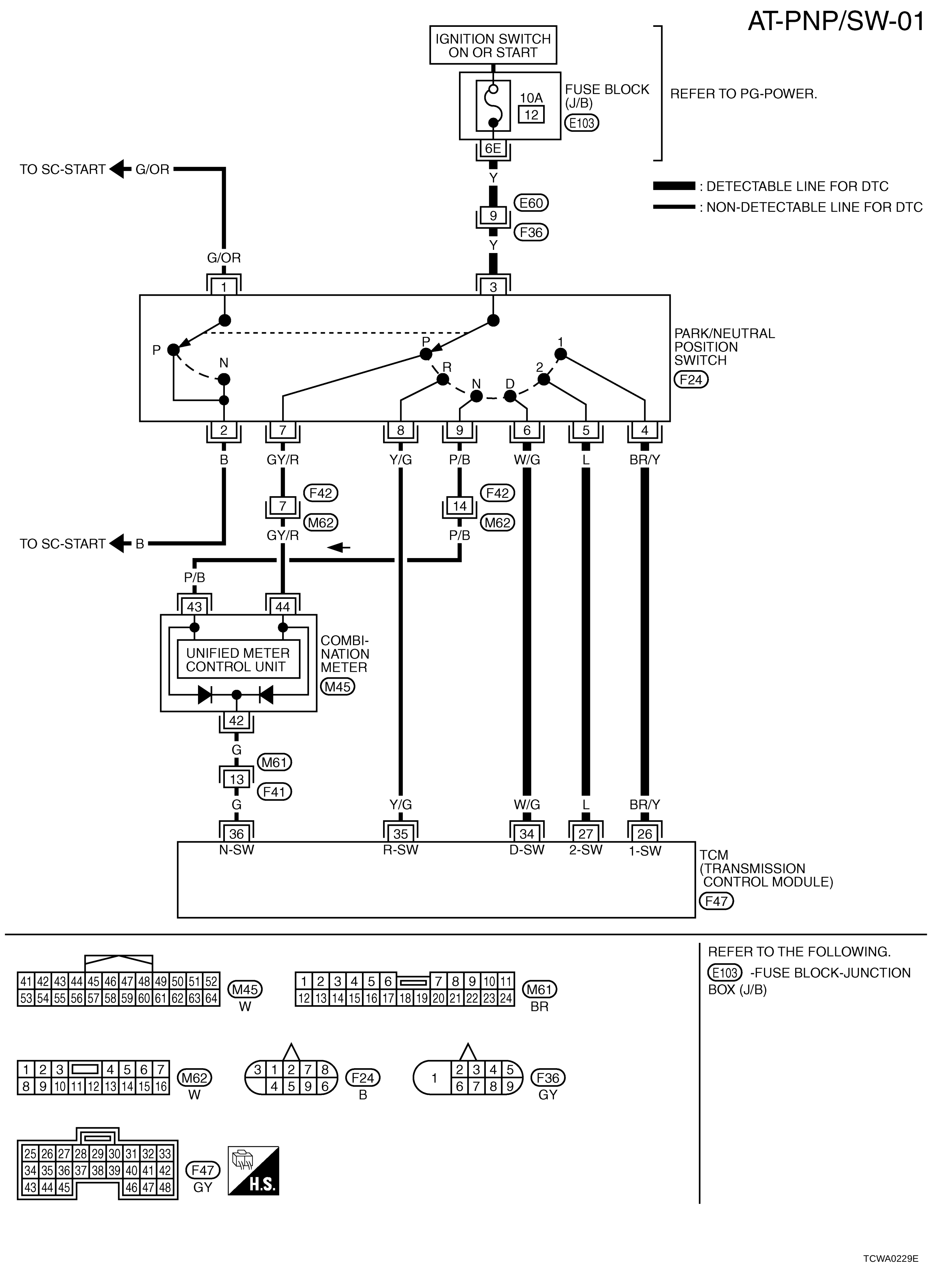

Data are reference value and are measured between each terminal and ground.

Terminal	Wire color	Item	Condition		Judgement standard (Approx.)
26	BR/Y	PNP switch “1” position	and 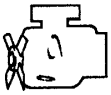	When setting selector lever to “1” position.	Battery voltage
				When setting selector lever to other positions.	0 V
27	L	PNP switch “2” position		When setting selector lever to “2” position.	Battery voltage
				When setting selector lever to other positions.	0 V
34	W/G	PNP switch “D” position		When setting selector lever to “D” position.	Battery voltage
				When setting selector lever to other positions.	0 V
35	Y/G	PNP switch “R” position		When setting selector lever to “R” position.	Battery voltage
				When setting selector lever to other positions.	0 V
36	G	PNP switch “N” or “P” position		When setting selector lever to “N” or “P” position.	Battery voltage
				When setting selector lever to other positions.	0 V

Diagnostic Procedure

ACS007Z1

1. CHECK PNP SWITCH CIRCUIT (WITH CONSULT-II)

With CONSULT-II

1. Turn ignition switch ON. (Do not start engine.)
2. Select “TCM INPUT SIGNALS” in “DATA MONITOR” mode for “A/T” with CONSULT-II.
3. Read out “P·N”, “N”, “D”, “2” and “1” position switches moving selector lever to each position.

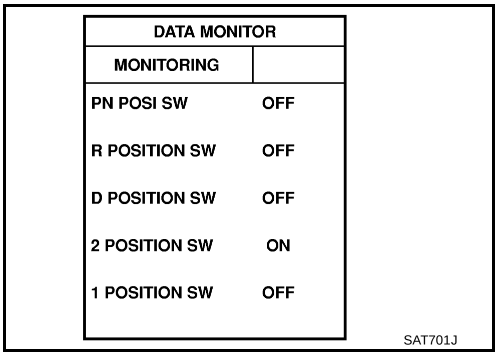

SAT701J

Item name	Condition	Display value
PN POSI SW	When setting selector lever to “N” or “P” position.	ON
	When setting selector lever to other positions.	OFF
R POSITION SW	When setting selector lever to “R” position.	ON
	When setting selector lever to other positions.	OFF
D POSITION SW	When setting selector lever to “D” position.	ON
	When setting selector lever to other positions.	OFF
2 POSITION SW	When setting selector lever to “2” position.	ON
	When setting selector lever to other positions.	OFF
1 POSITION SW	When setting selector lever to “1” position.	ON
	When setting selector lever to other positions.	OFF

OK or NG

OK >> GO TO 6.
NG >> GO TO 3.

2. CHECK PNP SWITCH CIRCUIT (WITHOUT CONSULT-II)

Without CONSULT-II

1. Turn ignition switch ON. (Do not start engine.)
2. Check voltage between TCM connector terminals and ground while moving selector lever through each position.

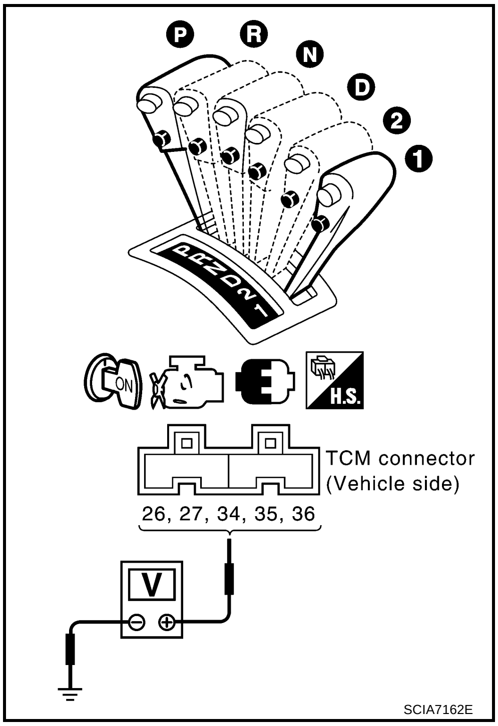

SCIA7162E

Selector lever position	Terminal				
	36	35	34	27	26
“P”, “N”	B	0	0	0	0
“R”	0	B	0	0	0
“D”	0	0	B	0	0
“2”	0	0	0	B	0
“1”	0	0	0	0	B

B: Battery voltage
0: 0 V

OK or NG

OK >> GO TO 6.
NG >> GO TO 3.

3. CHECK PNP SWITCH

1. Turn ignition switch OFF.
2. Disconnect PNP switch harness connector.
3. Check continuity between PNP switch harness connector terminals.

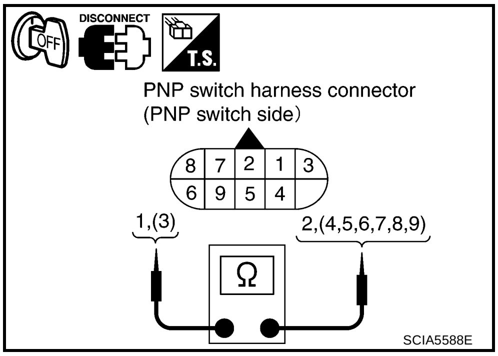

Selector lever position	Connector	Terminal	Continuity
"P"	F24	1 - 2, 3 - 7	Yes *Continuity should not exist in positions other than the specified positions.
"R"		3 - 8	
"N"		1 - 2, 3 - 9	
"D"		3 - 6	
"2"		3 - 5	
"1"		3 - 4	

OK or NG

OK >> GO TO 5.
NG >> GO TO 4.

4. CHECK CONTROL CABLE ADJUSTMENT

Check PNP switch again with control cable disconnected from manual shaft of A/T assembly. Refer to test group 3.

OK or NG

OK >> Adjust control cable. Refer to AT-243, "Adjustment of A/T Position" .
NG >> Repair or replace PNP switch. Refer to AT-254, "Park/Neutral Position (PNP) Switch" .

5. DETECT MALFUNCTIONING ITEMS

Check the following.

- Harness for short or open between ignition switch and PNP switch.
- Harness for short or open between PNP switch and TCM.
- Harness for short or open between PNP switch and combination meter.
- Harness for short or open between combination meter and TCM.
- 10 A fuse (No.12, located in the fuse block)
- Combination meter. Refer to DI-4, "COMBINATION METERS" .
- Ignition switch. Refer to PG-2, "POWER SUPPLY ROUTING" .

OK or NG

OK >> GO TO 6.
NG >> Repair or replace damaged parts.

6. CHECK DTC

Perform AT-96, "DTC Confirmation Procedure" .

OK or NG

OK >> **INSPECTION END**
NG >> GO TO 7.

7. CHECK TCM

1. Check TCM input/output signals. Refer to AT-76, "TCM Terminals and Reference Value" .
2. If NG, recheck TCM pin terminals for damage or loose connection with harness connector.

OK or NG

OK >> **INSPECTION END**
NG >> Repair or replace damaged parts.

DTC P0710 A/T FLUID TEMPERATURE SENSOR CIRCUIT

PFP:31940

Description

ACS007RA

The A/T fluid temperature sensor detects the A/T fluid temperature and sends a signal to the TCM.

CONSULT-II Reference Value

ACS007Z7

Item name	Condition	Display value (Approx.)
FLUID TEMP SE	When ATF temperature is 20°C (68°F).	1.5 V
	When ATF temperature is 80°C (176°F).	0.5 V

On Board Diagnosis Logic

ACS007RB

- This is an OBD-II self-diagnostic item.
- Diagnostic trouble code “ATF TEMP SEN/CIRC” with CONSULT-II is detected when TCM receives an excessively low or high voltage from the sensor.

Possible Cause

ACS007RC

- Harness or connector
  (The sensor circuit is open or shorted.)
- A/T fluid temperature sensor

DTC Confirmation Procedure

ACS007RD

CAUTION:

- **Always drive vehicle at a safe speed.**
- **If performing this “DTC Confirmation Procedure” again, always turn ignition switch OFF and wait at least 10 seconds before continuing.**

After the repair, perform the following procedure to confirm the malfunction is eliminated.

WITH CONSULT-II

1. Turn ignition switch ON and select “DATA MONITOR” mode for “A/T” with CONSULT-II.
2. Start engine and maintain the following conditions for at least 10 minutes (Total). (It is not necessary to maintain continuously.)
   ENGINE SPEED: 450 rpm or more
   VEHICLE SPEED: 10 km/h (6 MPH) or more
   THRTL POS SEN: More than 1.2 V
   SLCT LVR POSI: “D” position (OD ON)
3. If the check result is NG, go to AT-103, "Diagnostic Procedure" .

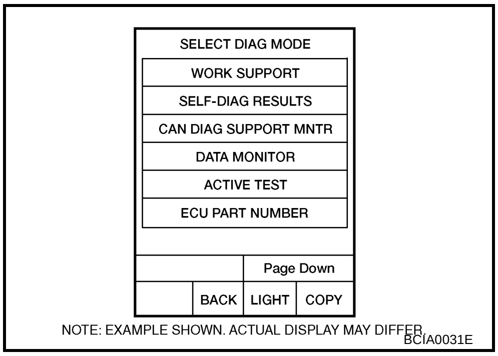

WITH GST

Follow the procedure “WITH CONSULT-II”.

WITHOUT CONSULT-II

1. Start engine.
2. Drive vehicle under the following conditions.
   Selector lever position: “D” position (OD ON)
   Vehicle speed: higher than 20 km/h (12 MPH)
3. Perform self-diagnosis. Refer to AT-89, "Diagnostic Procedure Without CONSULT-II" .
4. If the check result is NG, go to AT-103, "Diagnostic Procedure" .

Wiring Diagram — AT — FTS

ACS007WV

AT-FTS-01

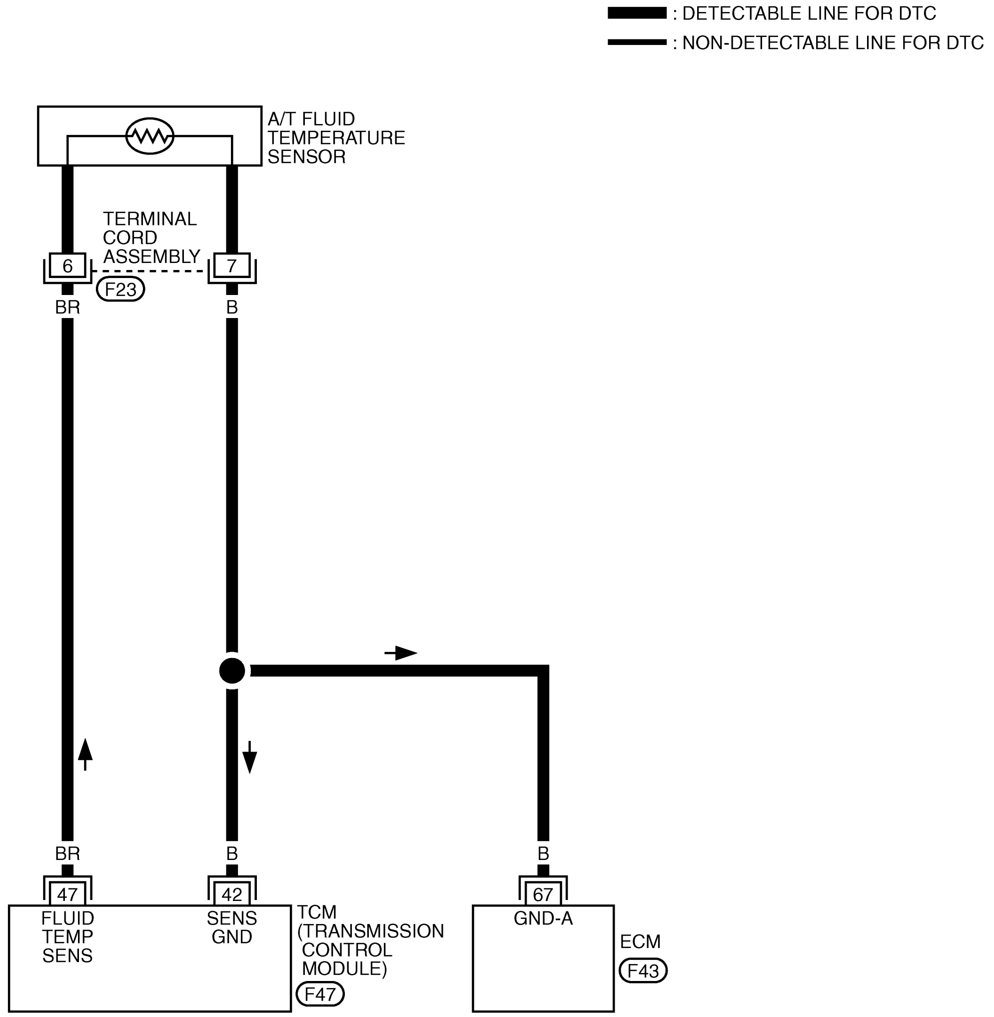

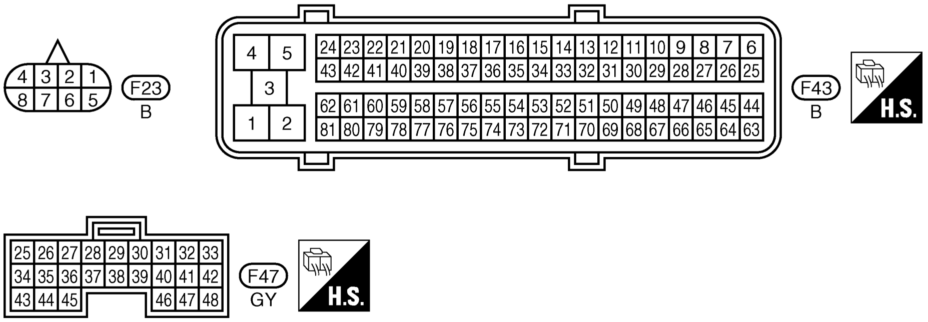

TCWB0007E

Data are reference value and are measured between each terminal and ground.

Terminal	Wire color	Item	Condition		Judgement standard (Approx.)
42	B	Sensor ground	Always		0 V
47	BR	A/T fluid temperature sensor		When ATF temperature is 20°C (68°F).	1.5 V
				When ATF temperature is 80°C (176°F).	0.5 V

Diagnostic Procedure

ACS007RE

1. CHECK INPUT SIGNAL OF A/T FLUID TEMPERATURE SENSOR

With CONSULT-II

1. Start engine.
2. Select “TCM INPUT SIGNALS” in “DATA MONITOR” mode for “A/T” with CONSULT-II.
3. Read out the value of “FLUID TEMP SE”.

Item name	Condition	Display value (Approx.)
FLUID TEMP SE	When ATF temperature is 20°C (68°F).	1.5 V
	When ATF temperature is 80°C (176°F).	0.5 V

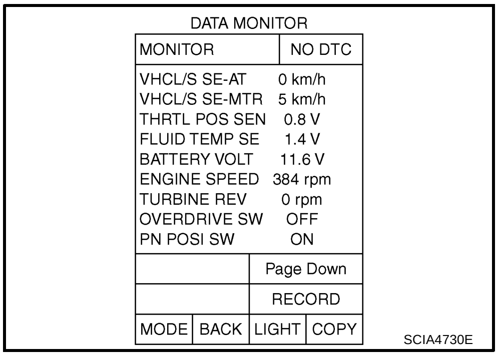

SCIA4730E

Without CONSULT-II

1. Start engine.
2. Check voltage TCM connector terminals while warming up A/T.

Item	Connector	Terminal	Condition	Judgement standard (Approx.)
A/T fluid temperature sensor	F47	47 - 42	When ATF temperature is 20°C (68°F).	1.5 V
			When ATF temperature is 80°C (176°F).	0.5 V

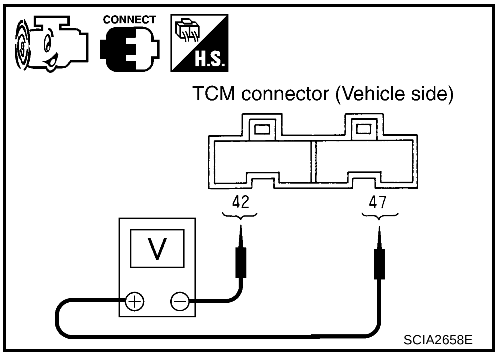

SCIA2658E

OK or NG

OK >> GO TO 7.
NG >> GO TO 2.

2. DETECT MALFUNCTIONING ITEMS

Check the following.

- Harness for short or open between TCM, ECM and terminal cord assembly
- Ground circuit for ECM. Refer to EC-144, "POWER SUPPLY AND GROUND CIRCUIT" .

OK or NG

OK >> GO TO 3.
NG >> Repair or replace damaged parts.

3. CHECK FLUID TEMPERATURE SENSOR CIRCUIT

1. Turn ignition switch OFF.
2. Disconnect the TCM connector.
3. Check resistance between TCM connector terminals.

Item	Connector	Terminal	Tempera-ture °C (°F)	Resistance (Approx.)
A/T fluid tempera-ture sensor	F47	47 - 42	20 (68)	2.5 kΩ
			80 (176)	0.3 kΩ

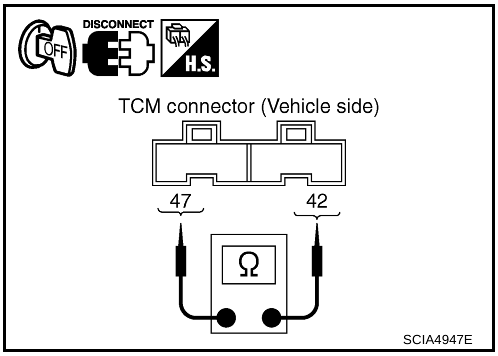

OK or NG

OK >> GO TO 7.
NG >> GO TO 4.

4. CHECK HARNESS BETWEEN TCM AND TERMINAL CORD ASSEMBLY HARNESS CONNECTOR

1. Turn ignition switch OFF.
2. Disconnect terminal cord assembly harness connector and TCM connector.
3. Check continuity between terminal cord assembly harness connector terminals and TCM connector terminals.

Item	Connector	Terminal	Continuity
TCM connector	F47	42	Yes
Terminal cord assembly harness connector	F23	7	
TCM connector	F47	47	Yes
Terminal cord assembly harness connector	F23	6	

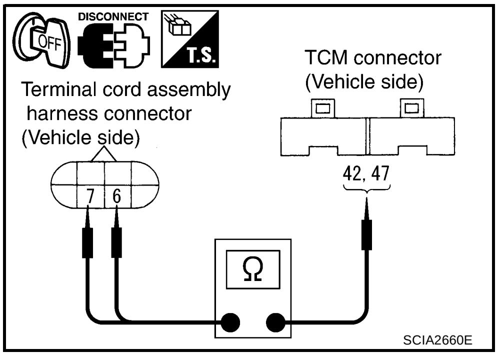

4. If OK, check harness for short to ground and short to power.
5. Reinstall any part removed.

OK or NG

OK >> GO TO 5.
NG >> Repair open circuit or short to ground or short to power in harness or connectors.

5. CHECK A/T FLUID TEMPERATURE SENSOR WITH TERMINAL CORD ASSEMBLY

1. Turn ignition switch OFF.
2. Disconnect terminal cord assembly harness connector in engine room.
3. Check resistance between terminal cord assembly harness connector terminals.

Temperature °C (°F)	Resistance (Approx.)
20 (68)	2.5 kΩ
80 (176)	0.3 kΩ

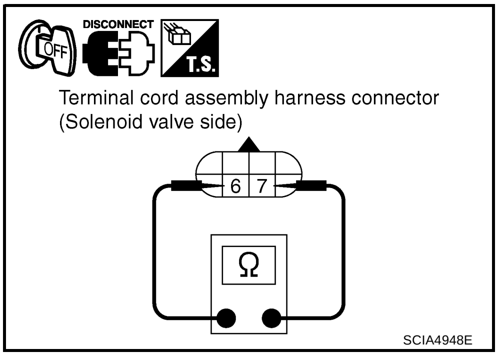

4. Reinstall any part removed.

OK or NG

OK >> GO TO 6.
NG >> Repair or replace damaged parts.

6. DETECT MALFUNCTIONING ITEM

1. Remove oil pan. Refer to AT-251, "Control Valve Assembly and Accumulators" .
2. Check the following.

– A/T fluid temperature sensor

- Check resistance between terminal cord assembly harness connector terminals while changing temperature as shown.

Temperature °C (°F)	Resistance (Approx.)
20 (68)	2.5 kΩ
80 (176)	0.3 kΩ

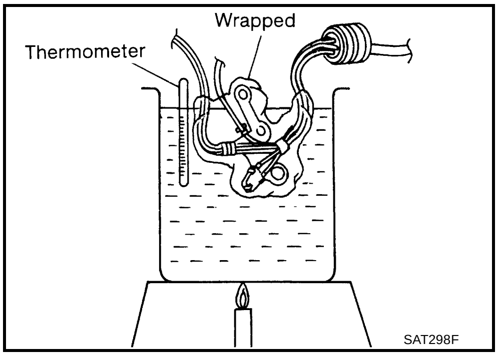

– Harness of terminal cord assembly for short or open

OK or NG

OK >> GO TO 7.
NG >> Repair or replace damaged parts.

7. CHECK DTC

Perform AT-101, "DTC Confirmation Procedure" .

OK or NG

OK >> **INSPECTION END**
NG >> GO TO 8.

8. CHECK TCM

1. Check TCM input/output signals. Refer to AT-76, "TCM Terminals and Reference Value" .
2. If NG, recheck TCM pin terminals for damage or loose connection with harness connector.

OK or NG

OK >> **INSPECTION END**
NG >> Repair or replace damaged parts.

Component Inspection

ACS007RF

A/T FLUID TEMPERATURE SENSOR

- Remove oil pan. Refer to AT-251, "Control Valve Assembly and Accumulators" .
- Check resistance between terminal cord assembly harness connector terminals while changing temperature as shown.

Temperature °C (°F)	Resistance (Approx.)
20 (68)	2.5 kΩ
80 (176)	0.3 kΩ

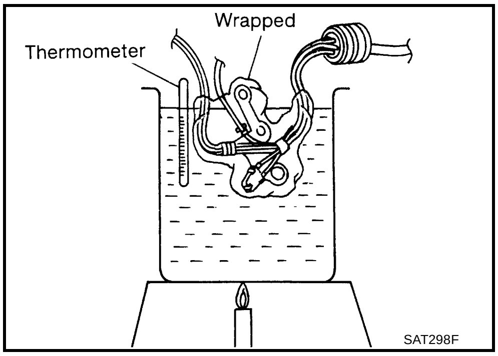

DTC P0720 VEHICLE SPEED SENSOR·A/T (REVOLUTION SENSOR)

PFP:32702

Description

ACS007RG

The revolution sensor detects the revolution of the idler gear parking pawl lock gear and emits a pulse signal. The pulse signal is sent to the TCM which converts it into vehicle speed.

CONSULT-II Reference Value

ACS007Z2

Item name	Condition	Display value
VHCL/S SE-A/T	During driving	Approximately matches the speedometer reading.

On Board Diagnosis Logic

ACS007RH

- This is an OBD-II self-diagnostic item.
- Diagnostic trouble code “VHCL SPEED SEN-A/T” with CONSULT-II or 1st judgement flicker without CONSULT-II is detected when TCM does not receive the proper voltage signal from the sensor.

Possible Cause

ACS007RI

- Harness or connector
  (The sensor circuit is open or shorted.)
- Revolution sensor

DTC Confirmation Procedure

ACS007RJ

CAUTION:

- **Always drive vehicle at a safe speed.**
- **Be careful not to rev engine into the red zone on the tachometer.**
- **If performing this “DTC Confirmation Procedure” again, always turn ignition switch OFF and wait at least 10 seconds before continuing.**

After the repair, perform the following procedure to confirm that the malfunction is eliminated.

WITH CONSULT-II

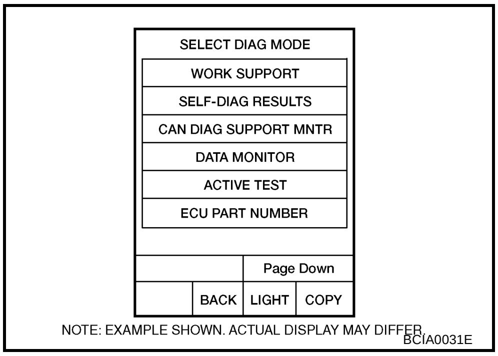

BCIA0031E

1. Turn ignition switch ON and select “DATA MONITOR” mode for “A/T” with CONSULT-II.
2. Drive vehicle and check for an increase of “VHCL/S SE·MTR” value increase.
   If the check result is NG, go to AT-109, "Diagnostic Procedure" .
   If the check result is OK, go to following step.
3. Select “DATA MONITOR” mode for “A/T” with CONSULT-II.
4. Start engine and maintain the following conditions for at least 5 consecutive seconds.
   VEHICLE SPEED: 30 km/h (19 MPH) or more
   THRTL POS SEN: More than 1.2 V
   SLCT LVR POSI: “D” position (OD ON)
   Driving location: Driving the vehicle uphill (increased engine load) will help maintain the driving conditions required for this test.
   If the check result is NG, go to AT-109, "Diagnostic Procedure" .
   If the check result is OK, go to following step.
5. Maintain the following conditions for at least 5 consecutive seconds.
   ENGINE SPEED: 3,500 rpm or more
   THRTL POS SEN: More than 1.2 V
   SLCT LVR POSI: “D” position (OD ON)
   Driving location: Driving the vehicle uphill (increased engine load) will help maintain the driving conditions required for this test.

WITH GST

Follow the procedure “WITH CONSULT-II”.

WITHOUT CONSULT-II

1. Start engine.
2. Drive vehicle under the following conditions for more than 5 seconds.
   Selector lever position: “D” position (OD ON)
   Vehicle speed: 30 km/h (19 MPH) or more
   Throttle position: greater than 1.0/8 of the full throttle position
3. Perform self-diagnosis. Refer to AT-89, "Diagnostic Procedure Without CONSULT-II" .
4. If the check result is NG, go to AT-109, "Diagnostic Procedure" .

Wiring Diagram — AT — VSSA/T

ACS007RK

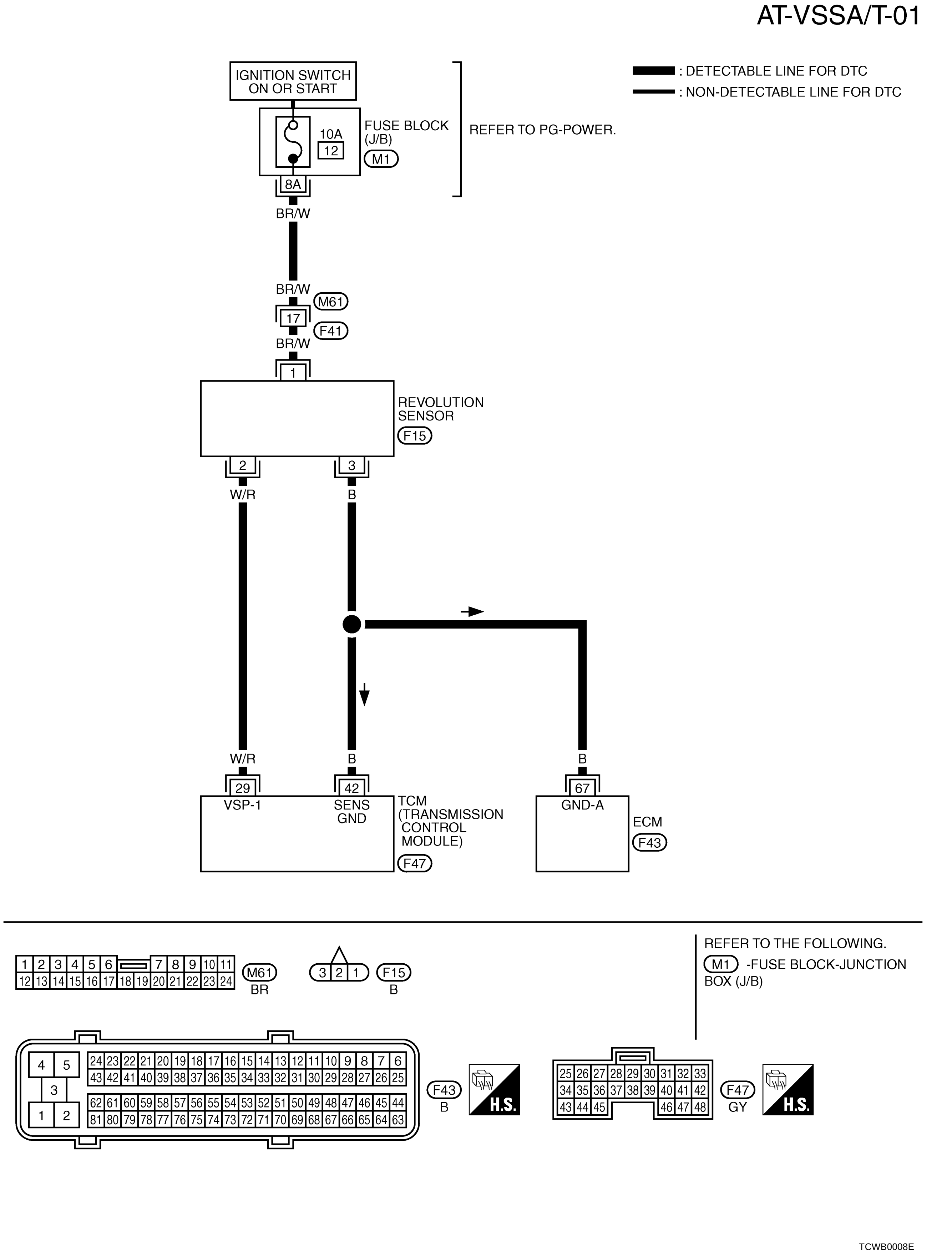

Data are reference value and are measured between each terminal and ground.

Terminal	Wire color	Item	Condition		Judgement standard (Approx.)
29	W/R	Revolution sensor	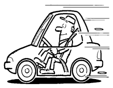	When moving at 20 km/h (12 MPH)	450 Hz
				When vehicle parks.	Under 1.3 V or over 4.5 V
42	B	Sensor ground	Always		0 V

Diagnostic Procedure

ACS007RL

1. CHECK INPUT SIGNAL

With CONSULT-II

1. Start engine.
2. Select “TCM INPUT SIGNALS” in “DATA MONITOR” mode for “A/T” with CONSULT-II.
3. Read out the value of “VHCL/S SE-A/T” while driving.
   Check the value changes according to driving speed.

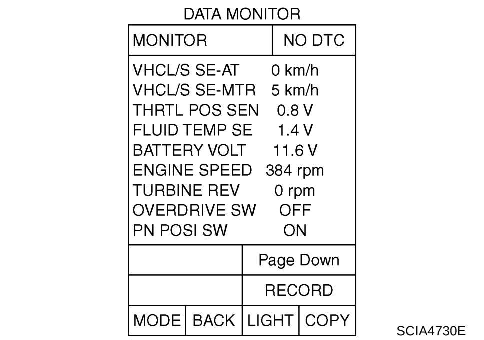

SCIA4730E

Item name	Condition	Display value
VHCL/S SE-A/T	During driving	Approximately matches the speedometer reading.

OK or NG

OK >> GO TO 8.
NG >> GO TO 2.

2. CHECK REVOLUTION SENSOR

1. Start engine.
2. Check power supply to revolution sensor by voltage between TCM connector terminals. Refer to AT-188, "Wiring Diagram — AT — MAIN" and AT-108, "Wiring Diagram — AT — VSSA/T" .

Item	Connector	Terminal	Judgement standard (Approx.)
TCM connector	F46, F47	10 - 42	Battery voltage
		19 - 42	

3. If OK, check the pulse when vehicle cruises.

Item	Condition
Revolution sensor	When moving at 20 km/h (12 MPH), use the CONSULT-II pulse frequency measuring function. **CAUTION:** **Connect the diagnosis data link cable to the data link connector.**

Item	Connector	Terminal	Data (Approx.)
TCM connector	F47	29	450 Hz

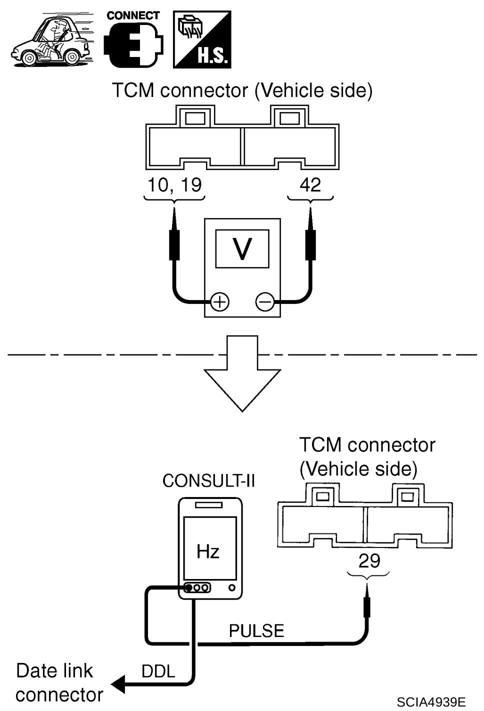

SCIA4939E

OK or NG

OK >> GO TO 8.
NG >> GO TO 3.

3. CHECK POWER AND SENSOR GROUND

1. Turn ignition switch OFF.
2. Disconnect revolution sensor harness connector.
3. Turn ignition switch ON. (Do not start engine.)
4. Check voltage between revolution sensor harness connector terminals.

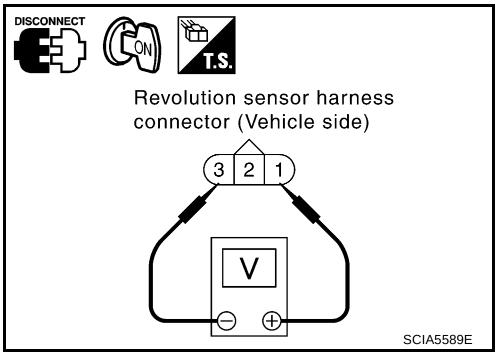

Item	Connector	Terminal	Judgement standard (Approx.)
Revolution sensor harness connector	F15	1 - 3	Battery voltage

5. Check voltage between revolution sensor harness connector terminal and ground.

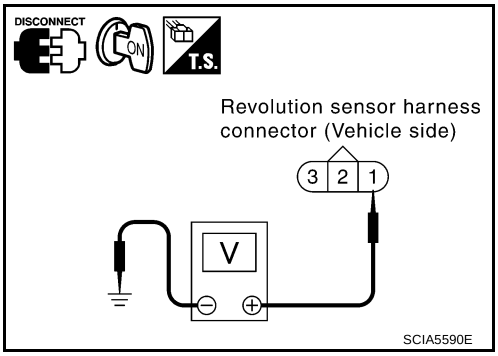

Item	Connector	Terminal	Judgement standard (Approx.)
Revolution sensor harness connector	F15	1 - ground	Battery voltage

6. If OK, check harness for short to ground and short to power.
7. Reinstall any part removed.

OK or NG

OK >> GO TO 4.
NG - 1 >> Battery voltage is not supplied between terminals 1 and 3, terminals 1 and ground: GO TO 6.
NG - 2 >> Battery voltage is not supplied between terminals 1 and 3 only: GO TO 7.

4. CHECK HARNESS BETWEEN TCM AND REVOLUTION SENSOR

1. Turn ignition switch OFF.
2. Disconnect TCM connector and revolution sensor harness connector.
3. Check continuity between TCM connector terminal and revolution sensor harness connector terminal.

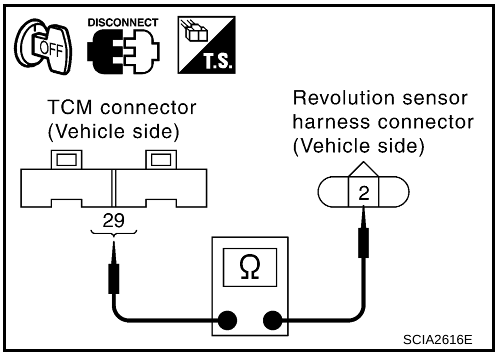

Item	Connector	Terminal	Continuity
TCM connector	F47	29	Yes
Revolution sensor harness connector	F15	2	

4. If OK, check harness for short to ground and short to power.
5. Reinstall any part removed.

OK or NG

OK >> GO TO 5.
NG >> Repair open circuit or short to ground or short to power in harness or connectors.

5. CHECK TCM

1. Check TCM input/output signals. Refer to AT-76, "TCM Terminals and Reference Value" .
2. If NG, recheck TCM pin terminals for damage or loose connection with harness connector.

OK or NG

OK >> GO TO 8.
NG >> Repair or replace damaged parts.

6. CHECK HARNESS BETWEEN TCM AND REVOLUTION SENSOR (POWER)

1. Turn ignition switch OFF.
2. Disconnect TCM connector and revolution sensor harness connector.
3. Check continuity between TCM connector terminal and revolution sensor harness connector terminal. Refer to AT-50, "Circuit Diagram" and AT-188, "Wiring Diagram — AT — MAIN" .

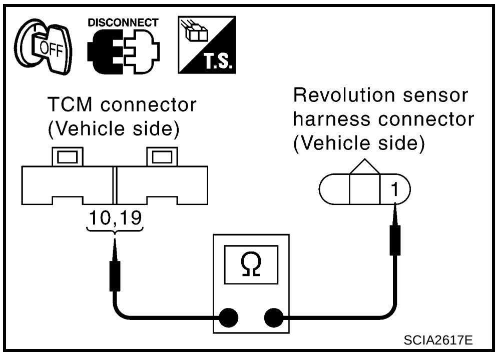

SCIA2617E

Item	Connector	Terminal	Continuity
TCM connector	F46	10	Yes
Revolution sensor harness connector	F15	1	
TCM connector	F46	19	Yes
Revolution sensor harness connector	F15	1	

4. If OK, check harness for short to ground and short to power.
5. Reinstall any part removed.

OK or NG

OK >> 10 A fuse (No.12, located in the fuse block) or ignition switch are malfunctioning.
NG >> Repair open circuit or short to ground or short to power in harness or connectors.

7. CHECK HARNESS BETWEEN TCM AND REVOLUTION SENSOR (SENSOR GROUND)

1. Turn ignition switch OFF.
2. Disconnect TCM connector and revolution sensor harness connector.
3. Check continuity between TCM connector terminal and revolution sensor harness connector terminal.

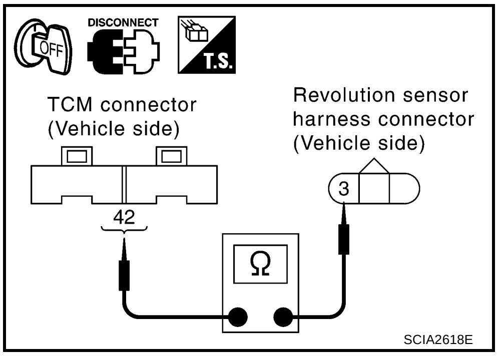

SCIA2618E

Item	Connector	Terminal	Continuity
TCM connector	F47	42	Yes
Revolution sensor harness connector	F15	3	

4. If OK, check harness for short to ground and short to power.
5. Reinstall any part removed.

OK or NG

OK >> GO TO 5.
NG >> Repair open circuit or short to ground or short to power in harness or connectors.

8. CHECK DTC

Perform AT-106, "DTC Confirmation Procedure" .

OK or NG

OK >> **INSPECTION END**
NG >> GO TO 5.

DTC P0725 ENGINE SPEED SIGNAL

PFP:24825

Description

ACS007RM

The engine speed signal is sent from ECM to TCM.

CONSULT-II Reference Value

ACS007Z3

Item name	Condition	Display value
ENGINE SPEED	Engine running	Approximately matches the tachometer reading.

On Board Diagnosis Logic

ACS007RN

- This is an OBD-II self-diagnostic item.
- Diagnostic trouble code “ENGINE SPEED SIG” with CONSULT-II or 9th judgement flicker without CONSULT-II is detected when TCM does not receive the proper voltage signal from ECM.

Possible Cause

ACS007RO

Harness or connector (The circuit is open or shorted.)

DTC Confirmation Procedure

ACS007RP

CAUTION:

- **Always drive vehicle at a safe speed.**
- **If performing this “DTC Confirmation Procedure” again, always turn ignition switch OFF and wait at least 10 seconds before continuing.**

After the repair, perform the following procedure to confirm the malfunction is eliminated.

WITH CONSULT-II

1. Turn ignition switch ON and select “DATA MONITOR” mode for “A/T” with CONSULT-II.
2. Start engine and maintain the following conditions for at least 10 consecutive seconds.
   VEHICLE SPEED: 10 km/h (6 MPH) or more
   THRTL POS SEN: More than 1.2 V
   SLCT LVR POSI: “D” position (OD ON)
3. If the check result is NG, go to AT-114, "Diagnostic Procedure" .

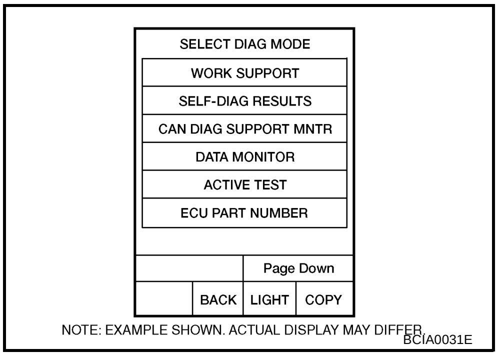

WITH GST

Follow the procedure “WITH CONSULT-II”.

WITHOUT CONSULT-II

1. Start engine.
2. Drive vehicle under the following conditions for more than 5 seconds.
   Selector lever position: “D” position (OD ON)
   Vehicle speed: 10 km/h (6 MPH) or more
   Throttle position: greater than 1.0/8 of the full throttle position
3. Perform self-diagnosis. Refer to AT-89, "Diagnostic Procedure Without CONSULT-II" .
4. If the check result is NG, go to AT-114, "Diagnostic Procedure" .

Wiring Diagram — AT — ENGSS

ACS007RQ

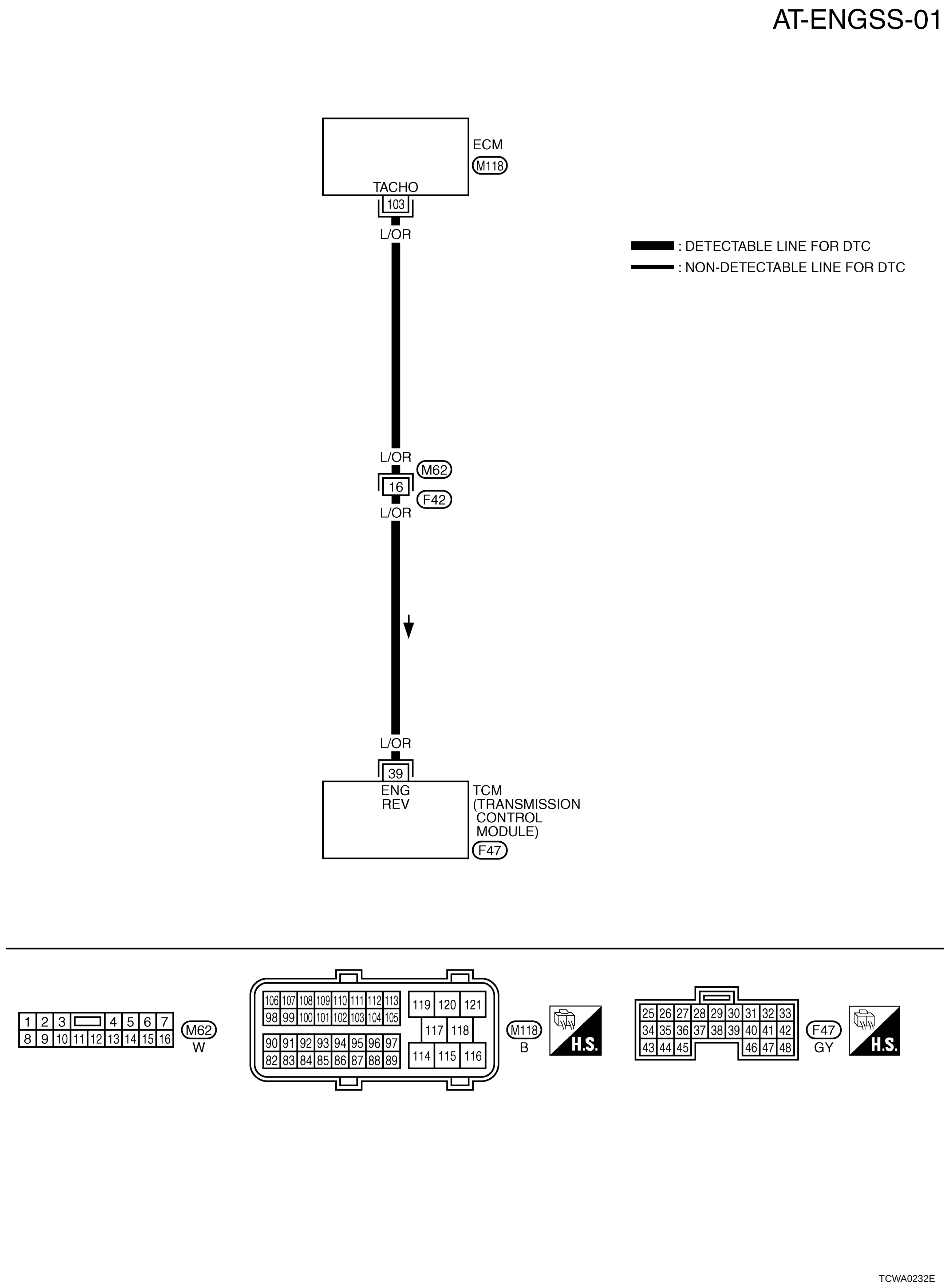

Data are reference value and are measured between each terminal and ground.

Terminal	Wire color	Item	Condition		Judgement standard (Approx.)
39	L/OR	Engine speed signal	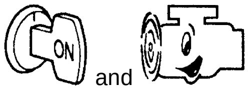	Refer to EC-104, "ECM INSPECTION TABLE" .	

Diagnostic Procedure

ACS007RR

1. CHECK DTC WITH ECM

Check DTC with CONSULT-II “ENGINE”.
Turn ignition switch ON and select “SELF-DIAGNOSTIC RESULTS” mode for “ENGINE” with CONSUTL-II. Refer to EC-112, "CONSULT-II Function (ENGINE)" .

OK or NG

OK >> GO TO 2.
NG >> Check ignition signal circuit for engine control. Refer to EC-623, "IGNITION SIGNAL" .

2. CHECK INPUT SIGNAL

With CONSULT-II

1. Start engine.
2. Select “TCM INPUT SIGNALS” in “DATA MONITOR” mode for “A/T” with CONSULT-II.
3. Read out the value of “ENGINE SPEED”.
   Check engine speed changes according to throttle position.

Item name	Condition	Display value
ENGINE SPEED	Engine running	Approximately matches the tachometer reading.

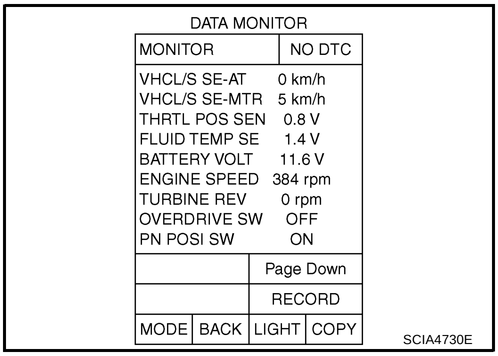

SCIA4730E

Without CONSULT-II

1. Start engine.
2. Check voltage between TCM connector terminal and ground.

Item	Connector	Terminal	Condition		Judgement standard (Approx.)
Engine speed signal	F47	39 - Ground	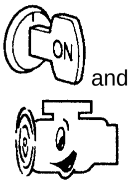	Refer to EC-104, "ECM INSPECTION TABLE" .	

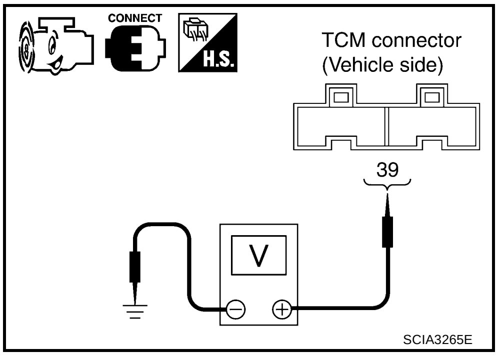

SCIA3265E

OK or NG

OK >> GO TO 4.
NG >> GO TO 3.

3. CHECK HARNESS BETWEEN TCM AND ECM

1. Turn ignition switch OFF.
2. Disconnect ECM connector and TCM connector.
3. Check continuity between ECM connector terminal and TCM connector terminal.

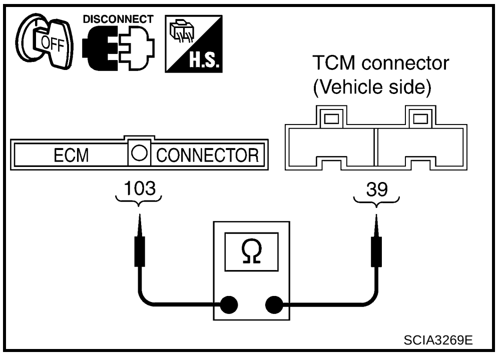

Item	Connector	Terminal	Continuity
TCM connector	F47	39	Yes
ECM connector	M118	103	

4. If OK, check harness for short to ground and short to power.
5. Reinstall any part removed.

OK or NG

OK >> GO TO 4.
NG >> Repair open circuit or short to ground or short to power in harness or connectors.

4. CHECK DTC

Perform AT-112, "DTC Confirmation Procedure" .

OK or NG

OK >> **INSPECTION END**
NG >> GO TO 5.

5. CHECK TCM

1. Check TCM input/output signals. Refer to AT-76, "TCM Terminals and Reference Value" .
2. If NG, recheck TCM pin terminals for damage or loose connection with harness connector.

OK or NG

OK >> **INSPECTION END**
NG >> Repair or replace damaged parts.

DTC P0731 A/T 1ST GEAR FUNCTION

PFP:31940

Description

ACS007RS

- This malfunction will not be detected while OD OFF indicator lamp is indicating another self-diagnosis malfunction.
- This malfunction is detected when the A/T does not shift into first gear position as instructed by TCM. This is not caused by electrical malfunction (circuits open or shorted) but by mechanical malfunction such as control valve sticking, improper solenoid valve operation, etc.

Gear position	1	2	3	4
Shift solenoid valve A	ON (Closed)	OFF (Open)	OFF (Open)	ON (Closed)
Shift solenoid valve B	ON (Closed)	ON (Closed)	OFF (Open)	OFF (Open)

On Board Diagnosis Logic

ACS007RT

- This is an OBD-II self-diagnostic item.
- This diagnosis monitors actual gear position by checking the torque converter slip ratio calculated by TCM as follows:
  Torque converter slip ratio = A x C/B
  A: Output shaft revolution signal from revolution sensor
  B: Engine speed signal from ECM
  C: Gear ratio determined as gear position which TCM supposes
  If the actual gear position is higher than the position (1st) supposed by TCM, the slip ratio will be more than normal. In case the ratio exceeds the specified value, TCM judges this diagnosis malfunction.
  This malfunction will be caused when either shift solenoid valve A is stuck open or shift solenoid valve B is stuck open.
- Gear positions supposed by TCM are as follows.
  In case of gear position with no malfunctions: **1** , 2, 3 and 4 positions
  In case of gear position with shift solenoid valve A stuck open: **2*** , 2, 3 and 3 positions
  In case of gear position with shift solenoid valve B stuck open: **4*** , 3, 3 and 4 positions to each gear position above
  *: P0731 is detected.
- Diagnostic trouble code “A/T 1ST GR FNCTN” with CONSULT-II is detected when A/T cannot be shifted to the 1st gear position even if electrical circuit is good.

Possible Cause

ACS007RU

- Shift solenoid valve A
- Shift solenoid valve B
- Each clutch
- Hydraulic control circuit

DTC Confirmation Procedure

ACS007RV

CAUTION:

- **Always drive vehicle at a safe speed.**
- **Be careful not to rev engine into the red zone on the tachometer.**
- **If performing this “DTC Confirmation Procedure” again, always turn ignition switch OFF and wait at least 10 seconds before continuing.**

TESTING CONDITION:

Always drive vehicle on a level road to improve the accuracy of test.

After the repair, perform the following procedure to confirm that the malfunction is eliminated.

WITH CONSULT-II

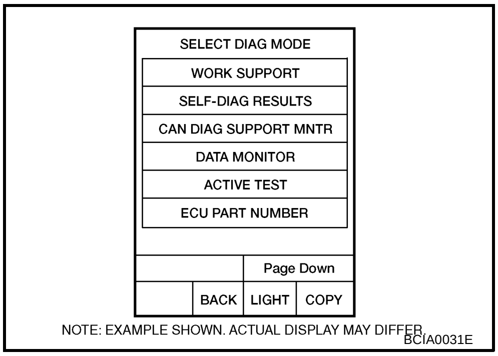

1. Start engine and select “DATA MONITOR” mode for “A/T” with CONSULT-II.
2. Make sure that output voltage of A/T fluid temperature sensor is within the range below.
   FLUID TEMP SE: 0.4 - 1.5 V
   If out of range, drive vehicle to decrease the voltage (warm up the ATF) or stop engine to increase the voltage (cool down the ATF).
3. Select “1ST GR FNCTN P0731” of “DTC WORK SUPPORT” mode for “A/T” with CONSULT-II and touch “START”.
4. Accelerate vehicle to 15 to 20 km/h (9 to 12 MPH) under the following condition and release accelerator pedal completely.
   THROTTLE POSI: Less than 1.0/8 (at all times during step 4)
   SLCT LVR POSI: “D” position (OD ON)
   - **Make sure that “GEAR” shows “2” after releasing pedal.**
5. Depress accelerator pedal to WOT (more than 7.0/8 of “THROTTLE POSI”) quickly from a speed of 15 to 20 km/h (9 to 12 MPH) until “TESTING” changes to “STOP VEHICLE” or “COMPLETED”. (It will take approximately 3 seconds.)
   If the check result NG appears on CONSULT-II screen, go to AT-119, "Diagnostic Procedure" .
   If “STOP VEHICLE” appears on CONSULT-II screen, go to the following step.
   - **Make sure that “GEAR” shows “1” when depressing accelerator pedal to WOT.**
   - **If “TESTING” does not appear on CONSULT-II for a long time, select “SELF-DIAG RESULTS” for “ENGINE”. In case a 1st trip DTC other than “A/T 1ST GR FNCTN” is shown, refer to applicable “TROUBLE DIAGNOSIS FOR DTC”.**
6. Stop vehicle.
7. Follow the instruction displayed. (Check for normal shifting referring to the table below.)

Vehicle condition	Gear on actual transmission shift pattern when screen is changed to 1 → 2 → 3 → 4
No malfunction exists	1 → 2 → 3 → 4
Malfunction for “A/T 1ST GR FNCTN” exists.	2 → 2 → 3 → 3
	4 → 3 → 3 → 4

8. Make sure that “OK” is displayed. (If “NG” is displayed, refer to “Diagnostic Procedure”.)
   Refer to AT-119, "Diagnostic Procedure" .
   Refer to AT-65, "Vehicle Speed When Shifting Gears" .

WITH GST

Follow the procedure “WITH CONSULT-II”.

Wiring Diagram — AT — 1STSIG

ACS007WW

AT-1STSIG-01

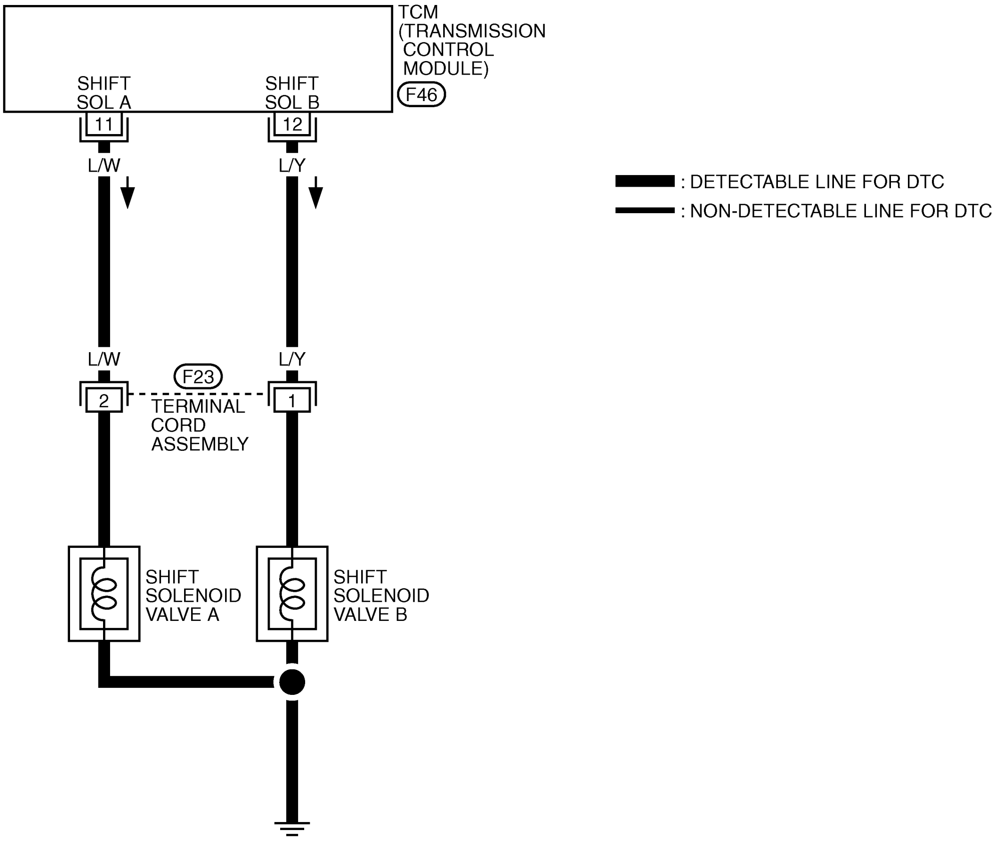

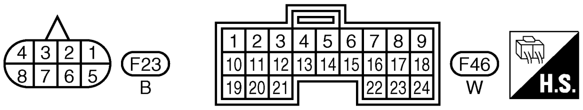

TCWA0049E

Data are reference value and are measured between each terminal and ground.

Terminal	Wire color	Item	Condition		Judgement standard (Approx.)
11	L/W	Shift solenoid valve A	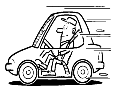	When shift solenoid valve A operates. (When driving in “D1 ” or “D4 ”.)	Battery voltage
				When shift solenoid valve A does not operate. (When driving in “D2 ” or “D3 ”.)	0 V
12	L/Y	Shift solenoid valve B		When shift solenoid valve B operates. (When driving in “D1 ” or “D2 ”.)	Battery voltage
				When shift solenoid valve B does not operate. (When driving in “D3 ” or “D4 ”.)	0 V

Diagnostic Procedure

ACS007RW

1. CHECK VALVE RESISTANCE

1. Remove control valve assembly. Refer to AT-251, "Control Valve Assembly and Accumulators" .
   - Shift solenoid valve A
   - Shift solenoid valve B
2. Check resistance between terminal cord assembly harness connector terminals and ground.

Solenoid valve	Terminal		Resistance (Approx.)
Shift solenoid valve A	2	Ground	20 - 30 Ω
Shift solenoid valve B	1	Ground	5 - 20 Ω

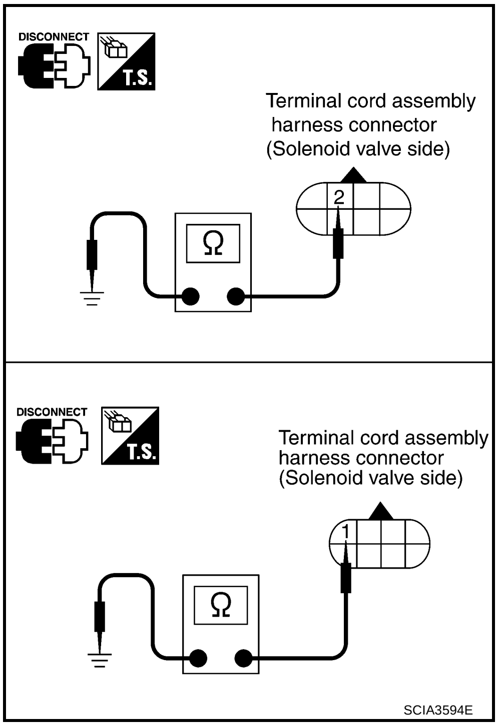

3. If OK, check harness for short to ground and short to power.
4. If OK, check continuity between ground and transaxle assembly.

OK or NG

OK >> GO TO 2.
NG >> Repair or replace shift solenoid valve assembly.

2. CHECK VALVE OPERATION

1. Remove control valve assembly. Refer to AT-251, "Control Valve Assembly and Accumulators" .
– Shift solenoid valve A
– Shift solenoid valve B
2. Check solenoid valve by listening for its operating sound while applying battery voltage to the terminals and ground.

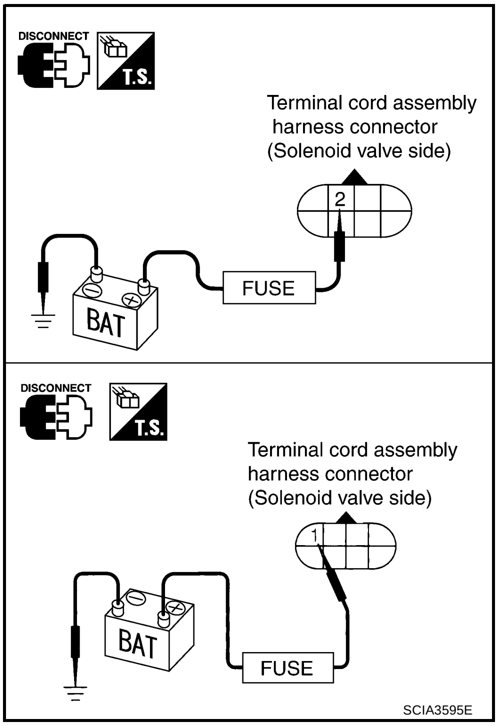

OK or NG

OK >> GO TO 3.
NG >> Repair or replace shift solenoid valve assembly.

3. CHECK CONTROL VALVE

1. Disassemble control valve assembly. Refer to AT-295, "Control Valve Assembly" .
2. Check to ensure that:
- Valve, sleeve and plug slide along valve bore under their own weight.
- Valve, sleeve and plug are free from burrs, dents and scratches.
- Control valve springs are free from damage, deformation and fatigue.
- Hydraulic line is free from obstacles.

OK or NG

OK >> GO TO 4.
NG >> Repair control valve assembly.

4. CHECK DTC

Perform AT-116, "DTC Confirmation Procedure" .

OK or NG

OK >> **INSPECTION END**
NG >> Check control valve again. If NG, repair or replace control valve assembly.

DTC P0732 A/T 2ND GEAR FUNCTION

PFP:31940

Description

ACS007RX

- This malfunction will not be detected while OD OFF indicator lamp is indicating another self-diagnosis malfunction.
- This malfunction is detected when A/T does not shift into second gear position as instructed by TCM. This is not caused by electrical malfunction (circuits open or shorted) but by mechanical malfunction such as control valve sticking, improper solenoid valve operation, etc.

Gear position	1	2	3	4
Shift solenoid valve A	ON (Closed)	OFF (Open)	OFF (Open)	ON (Closed)
Shift solenoid valve B	ON (Closed)	ON (Closed)	OFF (Open)	OFF (Open)

On Board Diagnosis Logic

ACS007RY

- This is an OBD-II self-diagnostic item.
- This diagnosis monitors actual gear position by checking the torque converter slip ratio calculated by TCM as follows:
  Torque converter slip ratio = A x C/B
  A: Output shaft revolution signal from revolution sensor
  B: Engine speed signal from ECM
  C: Gear ratio determined as gear position which TCM supposes
  If the actual gear position is higher than the position (2nd) supposed by TCM, the slip ratio will be more than normal. In case the ratio exceeds the specified value, TCM judges this diagnosis malfunction.
  This malfunction will be caused when shift solenoid valve B is stuck open.
- Gear positions supposed by TCM are as follows.
  In case of gear position with no malfunctions: 1, **2** , 3 and 4 positions
  In case of gear position with shift solenoid valve B stuck open: 4, **3*** , 3 and 4 positions to each gear position above
  *: P0732 is detected.
- Diagnostic trouble code "A/T 2ND GR FNCTN" with CONSULT-II is detected when A/T cannot be shifted to the 2nd gear position even if electrical circuit is good.

Possible Cause

ACS007RZ

- Shift solenoid valve B
- Each clutch
- Hydraulic control circuit

DTC Confirmation Procedure

ACS007S0

CAUTION:

- **Always drive vehicle at a safe speed.**
- **Be careful not to rev engine into the red zone on the tachometer.**
- **If performing this "DTC Confirmation Procedure" again, always turn ignition switch OFF and wait at least 10 seconds before continuing.**

TESTING CONDITION:
Always drive vehicle on a level road to improve the accuracy of test.
After the repair, perform the following procedure to confirm that the malfunction is eliminated.

WITH CONSULT-II

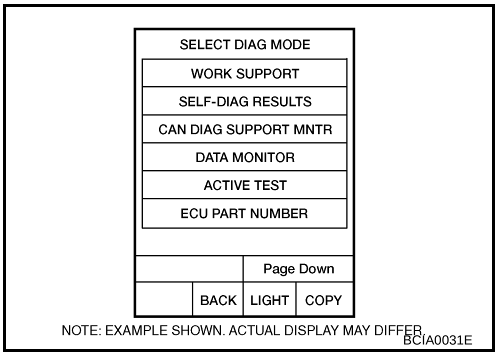

1. Start engine and select “DATA MONITOR” mode for “A/T” with CONSULT-II.
2. Make sure that output voltage of A/T fluid temperature sensor is within the range below.
   FLUID TEMP SE: 0.4 - 1.5 V
   If out of range, drive vehicle to decrease the voltage (warm up the ATF) or stop engine to increase the voltage (cool down the ATF).
3. Select “2ND GR FNCTN P0732” of “DTC WORK SUPPORT” mode for “A/T” with CONSULT-II and touch “START”.
4. Accelerate vehicle to 35 to 40 km/h (22 to 25 MPH) under the following condition and release accelerator pedal completely.
   THROTTLE POSI: Less than 1.0/8 (at all times during step 4)
   SLCT LVR POSI: “D” position (OD ON)

– **Make sure that “GEAR” shows “3” or “4” after releasing pedal.**

5. Depress accelerator pedal to WOT (more than 7.0/8 of “THROTTLE POSI”) quickly from a speed of 35 to 40 km/h (22 to 25 MPH) until “TESTING” changes to “STOP VEHICLE” or “COMPLETED”. (It will take approximately 3 seconds.)
   If the check result NG appears on CONSULT-II screen, go to AT-124, "Diagnostic Procedure" .
   If “STOP VEHICLE” appears on CONSULT-II screen, go to following step.

– **Make sure that “GEAR” shows “2” when depressing accelerator pedal to WOT.**

– **If “TESTING” does not appear on CONSULT-II for a long time, select “SELF-DIAG RESULTS” for “ENGINE”. In case a 1st trip DTC other than “A/T 2ND GR FNCTN” is shown, refer to applicable “TROUBLE DIAGNOSIS FOR DTC”.**

6. Stop vehicle.
7. Follow the instruction displayed. (Check for normal shifting referring to the table below.)

Vehicle condition	Gear on actual transmission shift pattern when screen is changed to 1 → 2 → 3 → 4
No malfunction exists	1 → 2 → 3 → 4
Malfunction for “A/T 2ND GR FNCTN” exists.	4 → 3 → 3 → 4

8. Make sure that “OK” is displayed. (If “NG” is displayed, refer to “Diagnostic Procedure”.)
   Refer to AT-124, "Diagnostic Procedure" .
   Refer to AT-65, "Vehicle Speed When Shifting Gears" .

WITH GST

Follow the procedure “WITH CONSULT-II”.

Wiring Diagram — AT — 2NDSIG

ACS007WX

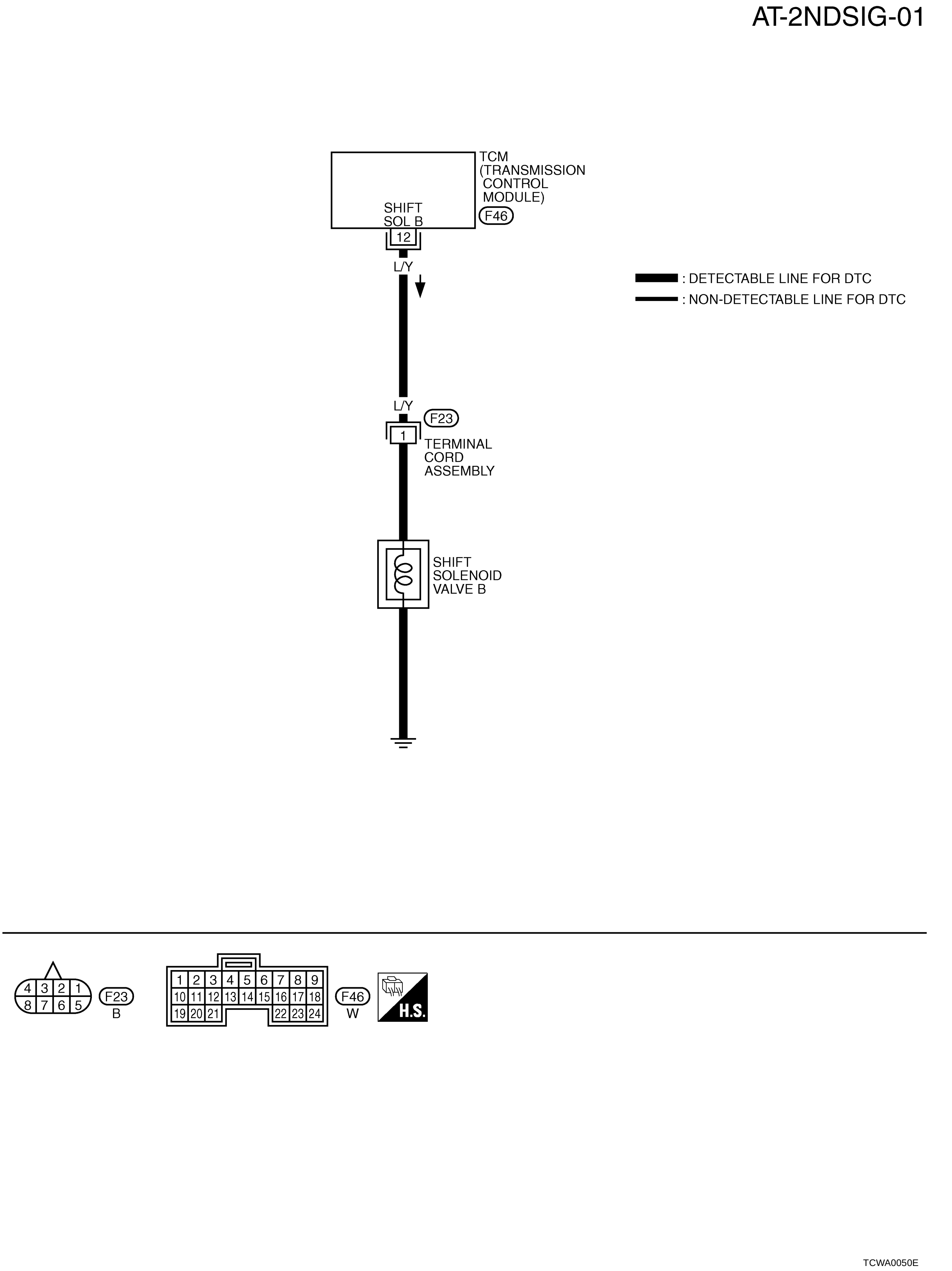

Data are reference value and are measured between each terminal and ground.

Terminal	Wire color	Item	Condition		Judgement standard (Approx.)
12	L/Y	Shift solenoid valve B		When shift solenoid valve B operates. (When driving in “D_1 ” or “D_2 ”.)	Battery voltage
				When shift solenoid valve B does not operate. (When driving in “D_3 ” or “D_4 ”.)	0 V

Diagnostic Procedure

ACS007S1

1. CHECK VALVE RESISTANCE

1. Remove control valve assembly. Refer to AT-251, "Control Valve Assembly and Accumulators" .
   – Shift solenoid valve B
2. Check resistance between terminal cord assembly harness connector terminal and ground.

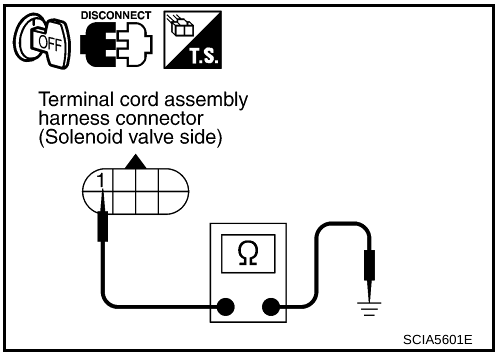

Solenoid valve	Terminal		Resistance (Approx.)
Shift solenoid valve B	1	Ground	5 - 20 Ω

3. If OK, check harness for short to ground and short to power.
4. If OK, check continuity between ground and transaxle assembly.

OK or NG

OK >> GO TO 2.
NG >> Repair or replace shift solenoid valve assembly.

2. CHECK VALVE OPERATION

1. Remove control valve assembly. Refer to AT-251, "Control Valve Assembly and Accumulators" .
   – Shift solenoid valve B
2. Check solenoid valve by listening for its operating sound while applying battery voltage to the terminal and ground.

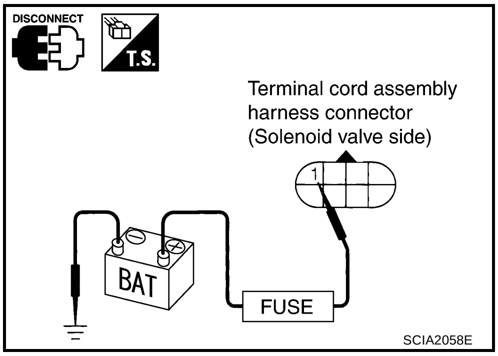

OK or NG

OK >> GO TO 3.
NG >> Repair to replace shift solenoid valve assembly.

3. CHECK CONTROL VALVE

1. Disassemble control valve assembly. Refer to AT-295, "Control Valve Assembly" .
2. Check to ensure that:
   – Valve, sleeve and plug slide along valve bore under their own weight.
   – Valve, sleeve and plug are free from burrs, dents and scratches.
   – Control valve springs are free from damage, deformation and fatigue.
   – Hydraulic line is free from obstacles.

OK or NG

OK >> GO TO 4.
NG >> Repair control valve assembly.

4. CHECK DTC

Perform AT-121, "DTC Confirmation Procedure" .

OK or NG

OK >> **INSPECTION END**
NG >> Check control valve again. If NG, repair or replace control valve assembly.

DTC P0733 A/T 3RD GEAR FUNCTION

PFP:31940

Description

ACS007S2

- This malfunction will not be detected while OD OFF indicator lamp is indicating another self-diagnosis malfunction.
- This malfunction is detected when A/T does not shift into third gear position as instructed by TCM. This is not caused by electrical malfunction (circuits open or shorted) but by mechanical malfunction such as control valve sticking, improper solenoid valve operation, malfunctioning servo piston or brake band, etc.

Gear position	1	2	3	4
Shift solenoid valve A	ON (Closed)	OFF (Open)	OFF (Open)	ON (Closed)
Shift solenoid valve B	ON (Closed)	ON (Closed)	OFF (Open)	OFF (Open)

On Board Diagnosis Logic

ACS007S3

- This is an OBD-II self-diagnostic item.
- This diagnosis monitors actual gear position by checking the torque converter slip ratio calculated by TCM as follows:
  Torque converter slip ratio = A x C/B
  A: Output shaft revolution signal from revolution sensor
  B: Engine speed signal from ECM
  C: Gear ratio determined as gear position which TCM supposes
  If the actual gear position is higher than the position (3rd) supposed by TCM, the slip ratio will be more than normal. In case the ratio exceeds the specified value, TCM judges this diagnosis malfunction.
  This malfunction will be caused when shift solenoid valve A is stuck closed.
- Gear positions supposed by TCM are as follows.
  In case of gear position with no malfunctions: 1, 2, **3** and 4 positions
  In case of gear position with shift solenoid valve A stuck closed: 1, 1, **4*** and 4 positions to each gear position above
  *: P0733 is detected.
- Diagnostic trouble code "A/T 3RD GR FNCTN" with CONSULT-II is detected when A/T cannot be shifted to the 3rd gear position even if electrical circuit is good.

Possible Cause

ACS007S4

- Shift solenoid valve A
- Each clutch
- Hydraulic control circuit

DTC Confirmation Procedure

ACS007S5

CAUTION:

- **Always drive vehicle at a safe speed.**
- **Be careful not to rev engine into the red zone on the tachometer.**
- **If performing this "DTC Confirmation Procedure" again, always turn ignition switch OFF and wait at least 10 seconds before continuing.**

TESTING CONDITION:

Always drive vehicle on a level road to improve the accuracy of test.

After the repair, perform the following procedure to confirm that the malfunction is eliminated.

WITH CONSULT-II

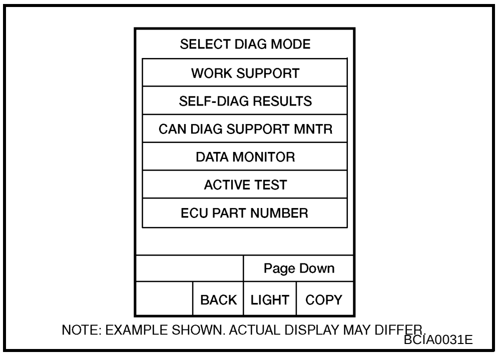

1. Start engine and select “DATA MONITOR” mode for “A/T” with CONSULT-II.
2. Make sure that output voltage of A/T fluid temperature sensor is within the range below.
   FLUID TEMP SE: 0.4 - 1.5 V
   If out of range, drive vehicle to decrease the voltage (warm up the ATF) or stop engine to increase the voltage (cool down the ATF).
3. Select “3RD GR FNCTN P0733” of “DTC WORK SUPPORT” mode for “A/T” with CONSULT-II and touch “START”.
4. Accelerate vehicle to 55 to 70 km/h (34 to 44 MPH) under the following condition and release accelerator pedal completely.
   THROTTLE POSI: Less than 1.0/8 (at all times during step 4)
   SLCT LVR POSI: “D” position (OD ON)
   - **Make sure that “GEAR” shows “4” after releasing pedal.**
5. Depress accelerator pedal steadily with 3.5/8 - 4.5/8 of “THROTTLE POSI” from a speed of 55 to 70 km/h (34 to 44 MPH) until “TESTING” changes to “STOP VEHICLE” or “COMPLETED”. (It will take approximately 3 seconds.)
   If the check result NG appears on CONSULT-II screen, go to AT-129, "Diagnostic Procedure" .
   If “STOP VEHICLE” appears on CONSULT-II screen, go to following step.
   - **Make sure that “GEAR” shows “3” when depressing accelerator pedal with 3.5/8 - 4.5/8 of “THROTTLE POSI”.**
   - **If “TESTING” does not appear on CONSULT-II for a long time, select “SELF-DIAG RESULTS” for “ENGINE”. In case a 1st trip DTC other than “A/T 3RD GR FNCTN” is shown, refer to applicable “TROUBLE DIAGNOSIS FOR DTC”.**
6. Stop vehicle.
7. Follow the instruction displayed. (Check for normal shifting referring to the table below.)

Vehicle condition	Gear on actual transmission shift pattern when screen is changed to 1 → 2 → 3 → 4
No malfunction exists.	1 → 2 → 3 → 4
Malfunction for “A/T 3RD GR FNCTN” exists.	1 → 1 → 4 → 4

8. Make sure that “OK” is displayed. (If “NG” is displayed, refer to Diagnostic Procedure.)
   Refer to AT-129, "Diagnostic Procedure" .
   Refer to AT-65, "Vehicle Speed When Shifting Gears" .

WITH GST

Follow the procedure “With CONSULT-II”.

Wiring Diagram — AT — 3RDSIG

ACS007WY

AT-3RDSIG-01

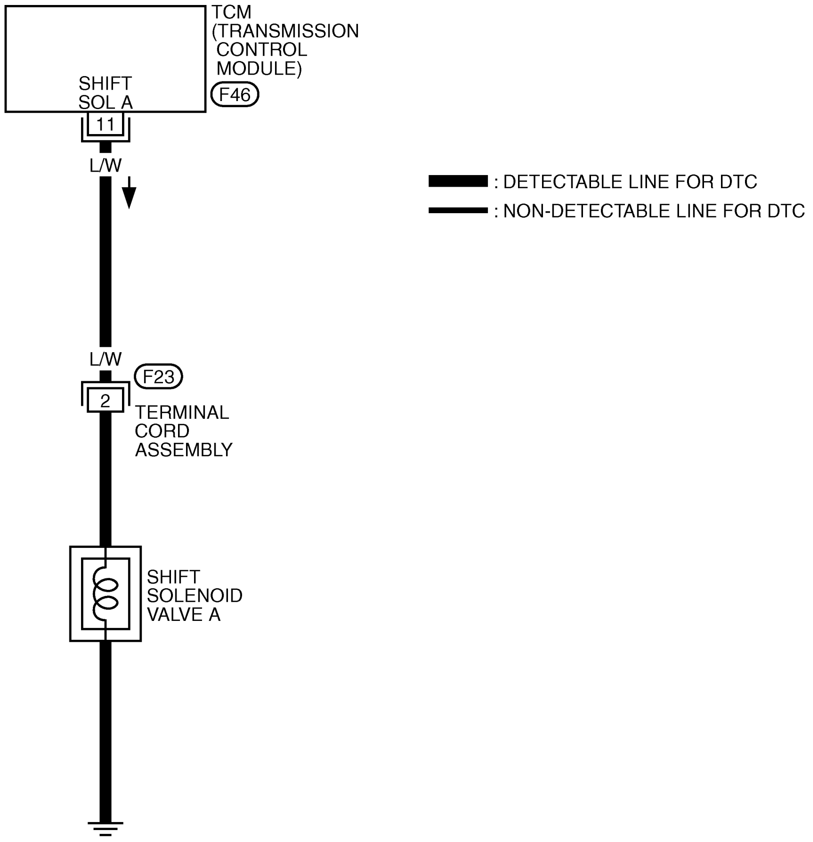

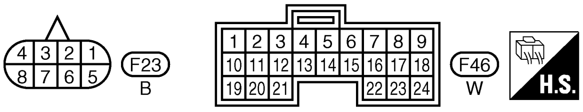

TCWA0051E

Data are reference value and are measured between each terminal and ground.

Terminal	Wire color	Item	Condition		Judgement standard (Approx.)
11	L/W	Shift solenoid valve A		When shift solenoid valve A operates. (When driving in “D1 ” or “D4 ”.)	Battery voltage
				When shift solenoid valve A does not operate. (When driving in “D2 ” or “D3 ”.)	0 V

Diagnostic Procedure

ACS007S6

1. CHECK VALVE RESISTANCE

1. Remove control valve assembly. Refer to AT-251, "Control Valve Assembly and Accumulators" .
– Shift solenoid valve A
2. Check resistance between terminal cord assembly harness connector terminal and ground.

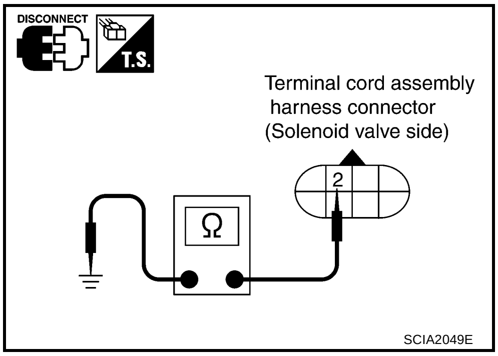

Solenoid valve	Terminal		Resistance (Approx.)
Shift solenoid valve A	2	Ground	20 - 30 Ω

3. If OK, check harness for short to ground and short to power.
4. If OK, check continuity between ground and transaxle assembly.

OK or NG

OK >> GO TO 2.
NG >> Repair or replace shift solenoid valve assembly.

2. CHECK VALVE OPERATION

1. Remove control valve assembly. Refer to AT-251, "Control Valve Assembly and Accumulators" .
– Shift solenoid valve A
2. Check solenoid valve by listening for its operating sound while applying battery voltage to the terminal and ground.

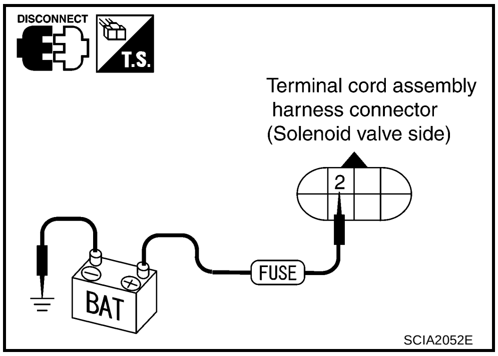

OK or NG

OK >> GO TO 3.
NG >> Repair or replace shift solenoid valve assembly.

3. CHECK CONTROL VALVE

1. Disassemble control valve assembly. Refer to AT-295, "Control Valve Assembly" .
2. Check to ensure that:
- Valve, sleeve and plug slide along valve bore under their own weight.
- Valve, sleeve and plug are free from burrs, dents and scratches.
- Control valve springs are free from damage, deformation and fatigue.
- Hydraulic line is free from obstacles.

OK or NG

OK >> GO TO 4.
NG >> Repair control valve assembly.

4. CHECK DTC

Perform AT-126, "DTC Confirmation Procedure" .

OK or NG

OK >> **INSPECTION END**
NG >> Check control valve again. If NG, repair or replace control valve assembly.

DTC P0734 A/T 4TH GEAR FUNCTION

PFP:31940

Description

ACS007S7

- This malfunction will not be detected while OD OFF indicator lamp is indicating another self-diagnosis malfunction.
- This malfunction is detected when A/T does not shift into fourth gear position or the torque converter clutch does not lock-up as instructed by TCM. This is not caused by electrical malfunction (circuits open or shorted) but by mechanical malfunction such as control valve sticking, improper solenoid valve operation, malfunctioning oil pump or torque converter clutch, etc.

Gear position	1	2	3	4
Shift solenoid valve A	ON (Closed)	OFF (Open)	OFF (Open)	ON (Closed)
Shift solenoid valve B	ON (Closed)	ON (Closed)	OFF (Open)	OFF (Open)

CONSULT-II Reference Value

ACS007Z4

Item name	Condition	Display value (Approx.)
LINE PRES DTY	Small throttle opening (Low line pressure) ⇔ Large throttle opening (High line pressure)	0% ⇔ 92%

On Board Diagnosis Logic

ACS007S8

- This is an OBD-II self-diagnostic item.
- This diagnosis monitors actual gear position by checking the torque converter slip ratio calculated by TCM as follows:
  Torque converter slip ratio = A x C/B
  A: Output shaft revolution signal from revolution sensor
  B: Engine speed signal from ECM
  C: Gear ratio determined as gear position which TCM supposes
  If the actual gear position is much lower than the position (4th) supposed by TCM, the slip ratio will be much less than normal. In case the ratio does not reach the specified value, TCM judges this diagnosis malfunction.
  This malfunction will be caused when shift solenoid valve A is stuck open or shift solenoid valve B is stuck closed.
- Gear positions supposed by TCM are as follows.
  In case of gear position with no malfunctions: 1, 2, 3 and **4** positions
  In case of gear position with shift solenoid valve A stuck open: 2, 2, 3 and **3*** positions
  In case of gear position with shift solenoid valve B stuck closed: 1, 2, 2 and **1*** positions to each gear position above
  *: P0734 is detected.
- Diagnostic trouble code “A/T 4TH GR FNCTN” with CONSULT-II is detected when A/T cannot be shifted to the 4th gear position even if electrical circuit is good.

Possible Cause

ACS007S9

- Shift solenoid valve A
- Shift solenoid valve B
- Line pressure solenoid valve
- Each clutch
- Hydraulic control circuit

DTC Confirmation Procedure

ACS007SA

CAUTION:

- **Always drive vehicle at a safe speed.**
- **Be careful not to rev engine into the red zone on the tachometer.**
- **If performing this “DTC Confirmation Procedure” again, always turn ignition switch OFF and wait at least 10 seconds before continuing.**

TESTING CONDITION:

Always drive vehicle on a level road to improve the accuracy of test.

After the repair, perform the following procedure to confirm that the malfunction is eliminated.

WITH CONSULT-II

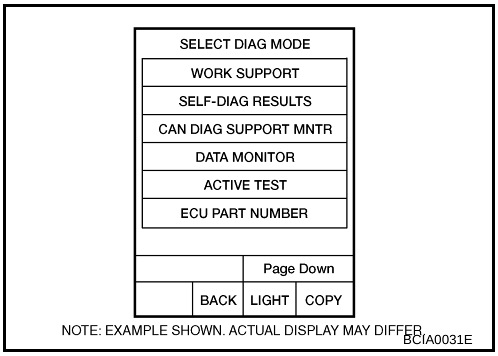

1. Start engine and select “DATA MONITOR” mode for “A/T” with CONSULT-II.
2. Make sure that output voltage of A/T fluid temperature sensor is within the range below.
   FLUID TEMP SE: 0.4 - 1.5 V
   If out of range, drive vehicle to decrease the voltage (warm up the ATF) or stop engine to increase the voltage (cool down the ATF).
3. Select “4TH GR FNCTN P0734” of “DTC WORK SUPPORT” mode for “A/T” with CONSULT-II and touch “START”.
4. Accelerate vehicle to 55 to 65 km/h (34 to 40 MPH) under the following condition and release accelerator pedal completely.
   THROTTLE POSI: Less than 5.5/8 (at all times during step 4)
   SLCT LVR POSI: “D” position (OD ON)
   - **Make sure that “GEAR” shows “3” after releasing pedal.**
5. Depress accelerator pedal steadily with 1.0/8 - 2.0/8 of “THROTTLE POSI” from a speed of 55 to 65 km/h (34 to 40 MPH) until “TESTING” has turned to “STOP VEHICLE” or “COMPLETED”. (It will take approximately 3 seconds.)
   If the check result NG appears on CONSULT-II screen, go to AT-134, "Diagnostic Procedure" .
   If “STOP VEHICLE” appears on CONSULT-II screen, go to following step.
   - **Make sure that “GEAR” shows “4” when depressing accelerator pedal with 1.0/8 - 2.0/8 of “THROTTLE POSI”.**
   - **If “TESTING” does not appear on CONSULT-II for a long time, select “SELF-DIAG RESULTS” for “ENGINE”. In case a 1st trip DTC other than “A/T 4TH GR FNCTN” is shown, refer to applicable “TROUBLE DIAGNOSIS FOR DTC”.**
6. Stop vehicle.
7. Follow the instruction displayed. (Check for normal shifting referring to the table below.)

Vehicle condition	Gear on actual transmission shift pattern when screen is changed to 1 → 2 → 3 → 4
No malfunction exists	1 → 2 → 3 → 4
Malfunction for “A/T 4TH GR FNCTN” exists.	2 → 2 → 3 → 3
	1 → 2 → 2 → 1

8. Make sure that “OK” is displayed. (If “NG” is displayed, refer to Diagnostic Procedure.)
   Refer to AT-134, "Diagnostic Procedure" .
   Refer to AT-65, "Vehicle Speed When Shifting Gears" .

WITH GST

Follow the procedure “WITH CONSULT-II”.

Wiring Diagram — AT — 4THSIG

ACS007X6

AT-4THSIG-01

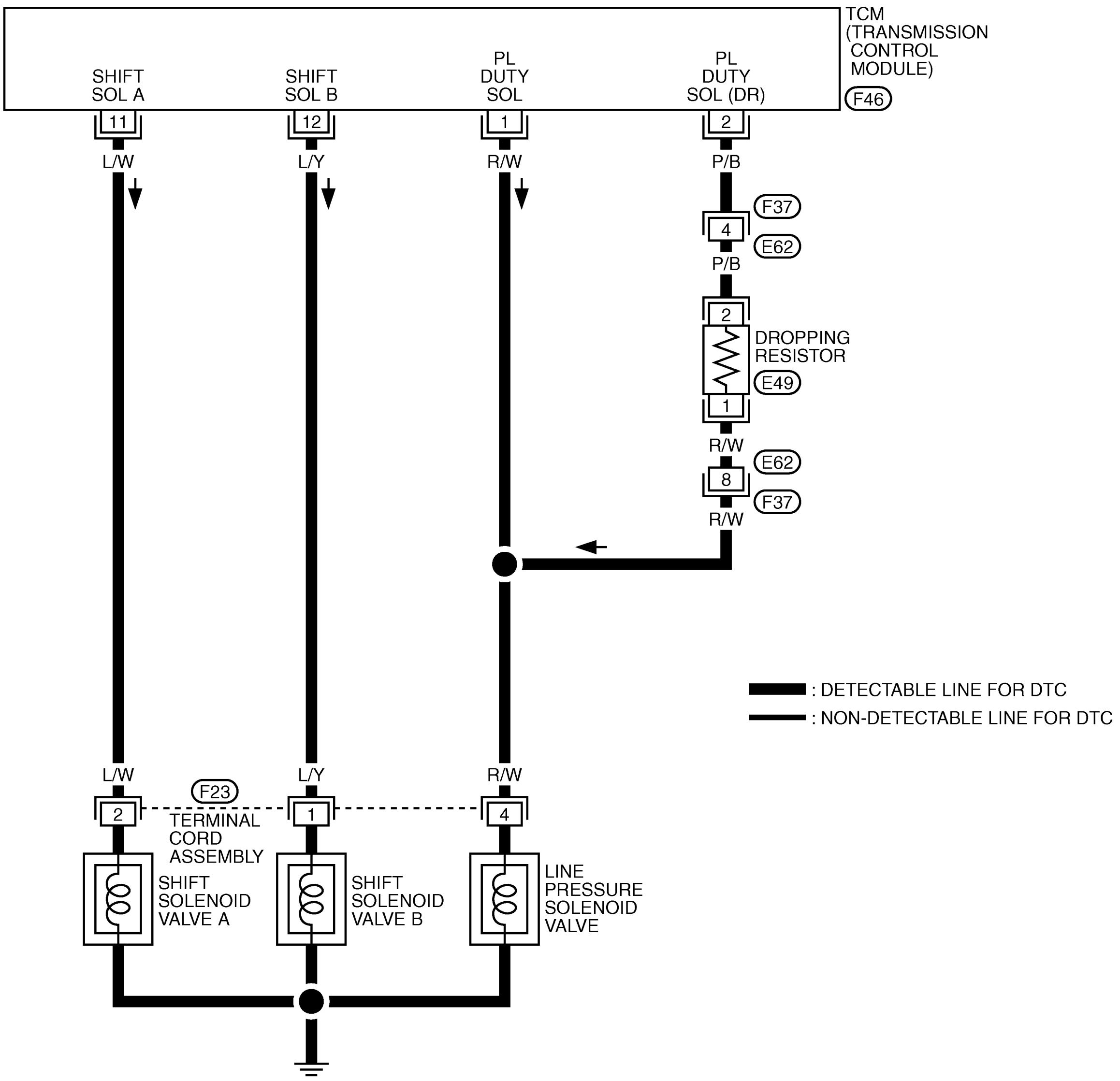

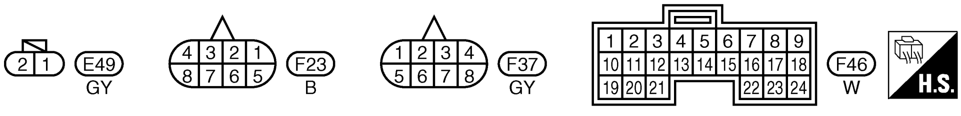

TCWA0052E

Data are reference value and are measured between each terminal and ground.

Terminal	Wire color	Item	Condition		Judgement standard (Approx.)
1	R/W	Line pressure solenoid valve		When releasing accelerator pedal after warming up engine.	1.5 - 3.0 V
				When depressing accelerator pedal fully after warming up engine.	0 V
2	P/B	Line pressure solenoid valve (with dropping resistor)		When releasing accelerator pedal after warming up engine.	5 - 14 V
				When depressing accelerator pedal fully after warming up engine.	0 V
11	L/W	Shift solenoid valve A	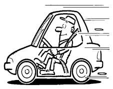	When shift solenoid valve A operates. (When driving in "D_1" or "D_4".)	Battery voltage
				When shift solenoid valve A does not operate. (When driving in "D_2" or "D_3".)	0 V
12	L/Y	Shift solenoid valve B		When shift solenoid valve B operates. (When driving in "D_1" or "D_2".)	Battery voltage
				When shift solenoid valve B does not operate. (When driving in "D_3" or "D_4".)	0 V

Diagnostic Procedure

ACS007X9

1. CHECK SHIFT-UP (D_3 TO D_4)

During AT-59, "Cruise Test — Part 1" .

Does A/T shift from D_3 to D_4 at the specified speed?

YES >> GO TO 11.
NO >> GO TO 2.

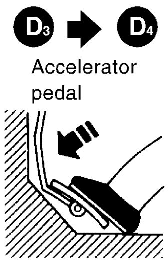

2. CHECK LINE PRESSURE

Perform line pressure test. Refer to AT-54, "LINE PRESSURE TEST" .

Engine speed	Line pressure kPa (kg/cm^2 , psi)	
	"D", "2" and "1" positions	"R" position
At idle speed	500 (5.1, 73)	778 (7.9, 113)
At stall speed	1,233 (12.6, 179)	1,918 (19.6, 278)

OK or NG

OK >> GO TO 3.
NG >> GO TO 7.

3. CHECK VALVE RESISTANCE

1. Remove control valve assembly. Refer to AT-251, "Control Valve Assembly and Accumulators" .
– Shift solenoid valve A
– Shift solenoid valve B
2. Check resistance between terminal cord assembly harness connector terminals and ground.

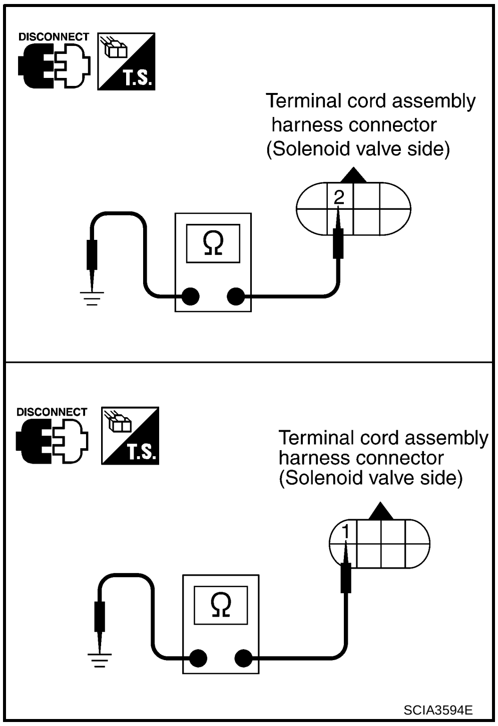

Solenoid valve	Terminal		Resistance (Approx.)
Shift solenoid valve A	2	Ground	20 - 30 Ω
Shift solenoid valve B	1	Ground	5 - 20 Ω

3. If OK, check harness for short to ground and short to power.
4. If OK, check continuity between ground and transaxle assembly.

OK or NG

OK >> GO TO 4.
NG >> Replace solenoid valve assembly.

4. CHECK VALVE OPERATION

1. Remove control valve assembly. Refer to AT-251, "Control Valve Assembly and Accumulators" .
– Shift solenoid valve A
– Shift solenoid valve B
2. Check solenoid valve by listening for its operating sound while applying battery voltage to the terminals and ground.

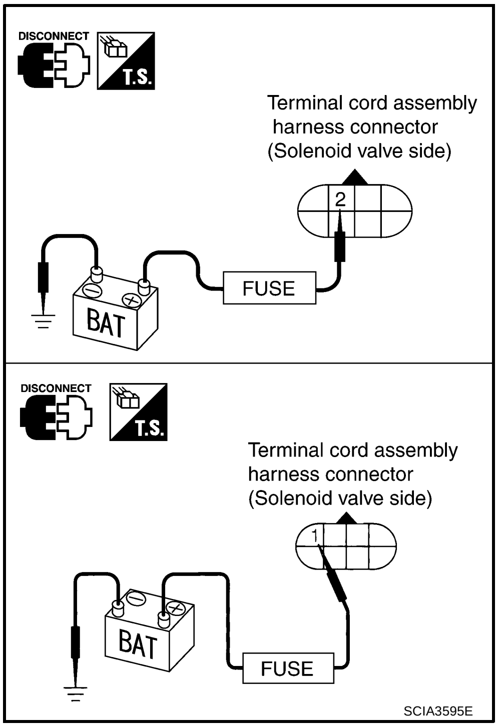

OK or NG

OK >> GO TO 5.
NG >> Replace solenoid valve assembly.

A B AT D E F G H I J K L M

5. CHECK CONTROL VALVE

1. Disassemble control valve assembly. Refer to AT-295, "Control Valve Assembly" .
2. Check to ensure that:
- Valve, sleeve and plug slide along valve bore under their own weight.
- Valve, sleeve and plug are free from burrs, dents and scratches.
- Control valve springs are free from damage, deformation and fatigue.
- Hydraulic line is free from obstacles.

OK or NG

OK >> GO TO 6.
NG >> Repair control valve.

6. CHECK SHIFT-UP (D_3 TO D_4)

During AT-59, "Cruise Test — Part 1" .

Does A/T shift from D_3 to D_4 at the specified speed?

YES >> GO TO 11.
NO >> Check control valve again. Repair or replace control valve assembly.

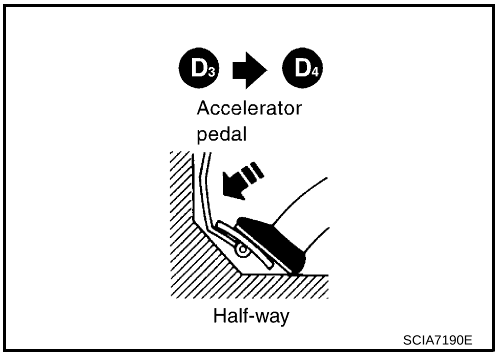

7. CHECK VALVE RESISTANCE

1. Remove control valve assembly. Refer to AT-251, "Control Valve Assembly and Accumulators" .
– Line pressure solenoid valve
2. Check resistance between terminal cord assembly harness connector terminal and ground.

Solenoid valve	Terminal		Resistance (Approx.)
Line pressure solenoid valve	4	Ground	2.5 - 5 Ω

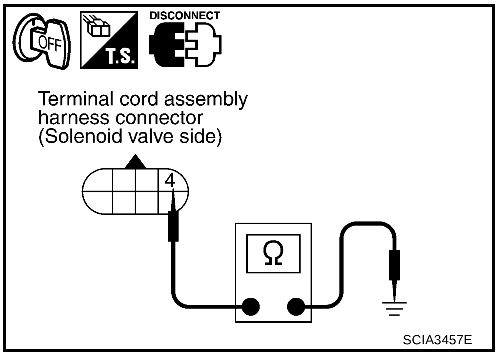

OK or NG

OK >> GO TO 8.
NG >> Replace solenoid valve assembly.

8. CHECK VALVE OPERATION

1. Remove control valve assembly. Refer to AT-251, "Control Valve Assembly and Accumulators" .
– Line pressure solenoid valve
2. Check solenoid valve by listening for its operating sound while applying battery voltage to the terminal and ground.

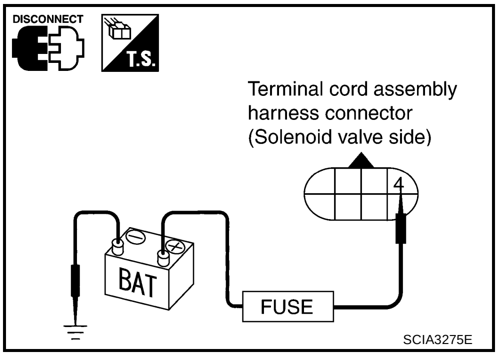

OK or NG

OK >> GO TO 9.
NG >> Replace solenoid valve assembly.

9. CHECK CONTROL VALVE

1. Disassemble control valve assembly. Refer to AT-295, "Control Valve Assembly" .
2. Check line pressure circuit valves for sticking.
- Pilot valve
- Shift solenoid valve A
- Shift solenoid valve B

OK or NG

OK >> GO TO 10.
NG >> Repair or replace control valve.

10. CHECK SHIFT-UP (D_3 TO D_4)

During AT-59, "Cruise Test — Part 1" .

Does A/T shift from D_3 to D_4 at the specified speed?

YES >> GO TO 11.
NO >> Check control valve again. Repair or replace control valve assembly.

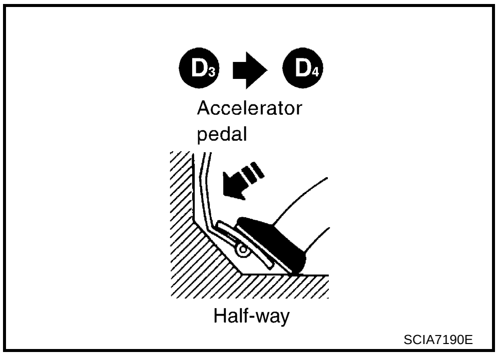

11. CHECK DTC

Perform AT-132, "DTC Confirmation Procedure" .

OK or NG

OK >> **INSPECTION END**
NG >> Perform AT-59, "Cruise Test — Part 1" again and return to the start point of this test group.

DTC P0740 TORQUE CONVERTER CLUTCH SOLENOID VALVE

PFP:31940

Description

ACS007SC

- Torque converter clutch solenoid valve is activated, with the gear in "D4 " and "D3 ", by TCM in response to signals sent from vehicle speed and throttle position sensors. Lock-up piston operation will then be controlled.
- Lock-up operation, however, is prohibited when A/T fluid temperature is too low.
- When the accelerator pedal is depressed (less than 2/8) in lock-up condition, the engine speed should not change abruptly. If there is a big jump in engine speed, there is no lock-up.

CONSULT-II Reference Value

ACS007Z5

Item name	Condition	Display value (Approx.)
TCC S/V DUTY	Lock-up OFF ⇔ Lock-up ON	4% ⇔ 94%

On Board Diagnosis Logic

ACS007SD

- This is an OBD-II self-diagnostic item.
- Diagnostic trouble code "T/C CLUTCH SOL/V" with CONSULT-II or 7th judgement flicker without CONSULT-II is detected when TCM detects an improper voltage drop when it tries to operate solenoid valve.

Possible Cause

ACS007SE

- Torque converter clutch solenoid valve
- Harness or connector
  (The solenoid circuit is open or shorted.)

DTC Confirmation Procedure

ACS007SF

CAUTION:

- **Always drive vehicle at a safe speed.**
- **If performing this "DTC Confirmation Procedure" again, always turn ignition switch OFF and wait at least 10 seconds before continuing.**

After the repair, perform the following procedure to confirm that the malfunction is eliminated.

WITH CONSULT-II

1. Turn ignition switch ON. (Do not start engine.)
2. Select "DATA MONITOR" mode for "A/T" with CONSULT-II and wait at least 1 second.
3. Start engine and maintain the following conditions for at least 5 consecutive seconds.
   VEHICLE SPEED: 80 km/h (50 MPH) or more
   THROTTLE POSI: 0.5/8 - 1.0/8
   SLCT LVR POSI: "D" position (OD ON)
   Driving location: Driving the vehicle uphill (increased engine load) will help maintain the driving conditions required for this test.
4. If the check result is NG go to AT-140, "Diagnostic Procedure" .

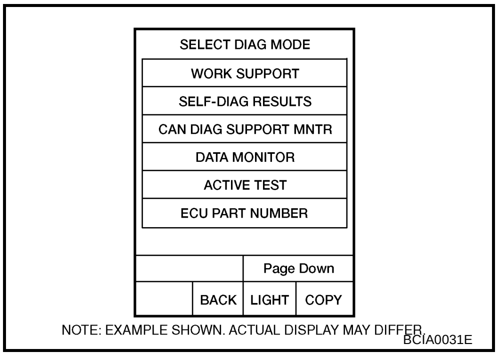

WITH GST

Follow the procedure "WITH CONSULT-II".

WITHOUT CONSULT-II

1. Start engine.
2. Drive vehicle in D1 → D2 → D3 → D4 → D4 lock-up position.
3. Perform self-diagnosis. Refer to AT-89, "Diagnostic Procedure Without CONSULT-II" .
4. If the check result is NG, go to AT-140, "Diagnostic Procedure" .

Wiring Diagram — AT — TCV

ACS007SG

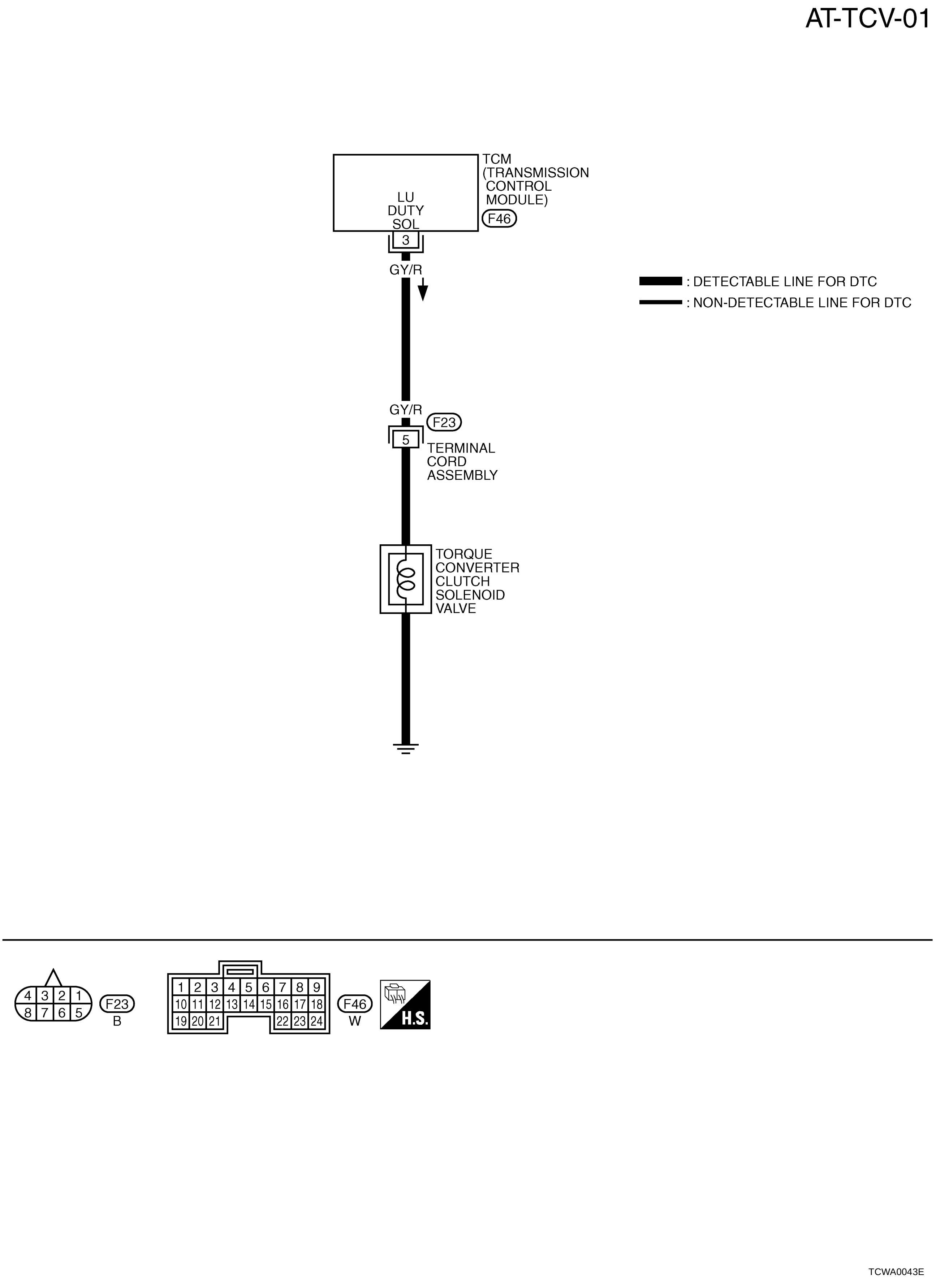

Data are reference value and are measured between each terminal and ground.

Terminal	Wire color	Item	Condition		Judgement standard (Approx.)
3	GY/R	Torque converter clutch solenoid valve		When A/T performs lock-up.	8 - 15 V
				When A/T does not perform lock-up.	0 V

Diagnostic Procedure

ACS007SH

1. CHECK INPUT SIGNAL

With CONSULT-II

1. Start engine.
2. Select “MAIN SIGNALS” in “DATA MONITOR” mode for “A/T” with CONSULT-II.
3. Read out the value of “TCC S/V DUTY” while driving.
   Check the value changes according to driving speed.

Item name	Condition	Display value (Approx.)
TCC S/V DUTY	Lock-up OFF ⇔ Lock-up ON	4% ⇔ 94%

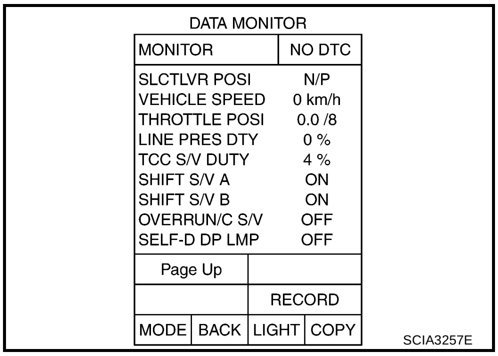

SCIA3257E

Without CONSULT-II

1. Start engine.
2. Check voltage between TCM connector terminal and ground.

Item	Connector	Terminal	Condition	Judgement standard (Approx.)
Torque converter clutch solenoid valve	F46	3 - Ground	When A/T performs lock-up.	8 - 15 V
			When A/T does not perform lock-up.	0 V

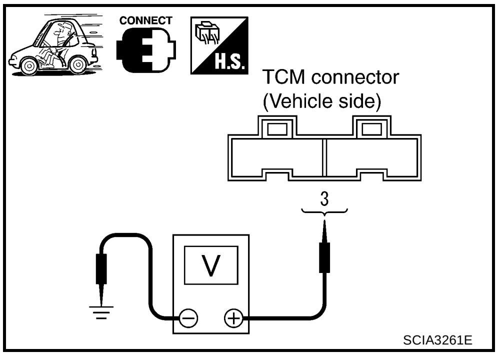

SCIA3261E

OK or NG

OK >> GO TO 5.
NG >> GO TO 2.

2. CHECK TORQUE CONVERTER CLUTCH SOLENOID VALVE CIRCUIT

1. Turn ignition switch OFF.
2. Disconnect TCM connector.
3. Check resistance between TCM connector terminal and ground.

Solenoid Valve	Connector	Terminal	Resistance (Approx.)
Torque converter clutch solenoid valve	F46	3 - Ground	5 - 20 Ω

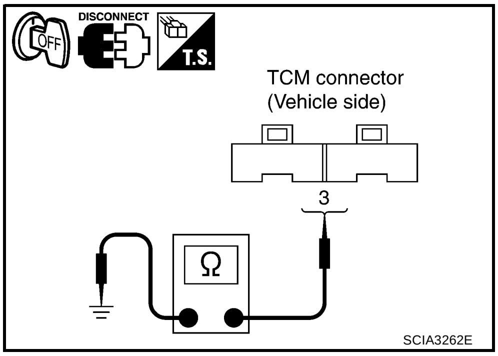

SCIA3262E

OK or NG

OK >> GO TO 5.
NG >> GO TO 3.

3. CHECK HARNESS BETWEEN TCM AND TERMINAL CORD ASSEMBLY HARNESS CONNECTOR

1. Turn ignition switch OFF.
2. Disconnect terminal cord assembly harness connector and TCM connector.
3. Check continuity between terminal cord assembly harness connector terminal and TCM connector terminal.

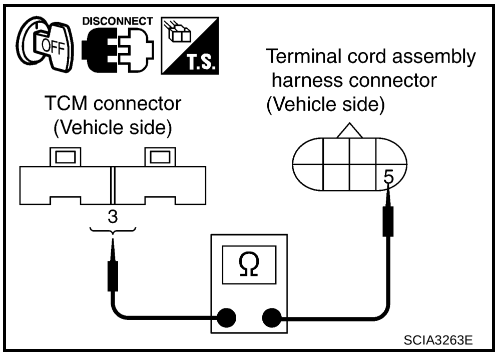

Item	Connector	Terminal	Continuity
TCM connector	F46	3	Yes
Terminal cord assembly harness connector	F23	5	

4. If OK, check harness for short to ground and short to power.
5. If OK, check continuity between ground and transaxle assembly.
6. Reinstall any part removed.

OK or NG

OK >> GO TO 4.
NG >> Repair open circuit or short to ground or short to power in harness or connectors.

4. CHECK VALVE RESISTANCE

1. Turn ignition switch OFF.
2. Disconnect terminal cord assembly harness connector in engine room.
3. Check resistance between terminal cord assembly harness connector terminal and ground.

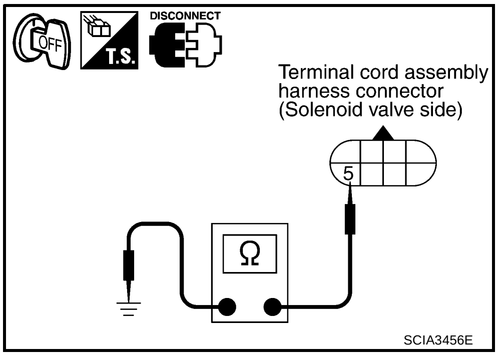

Solenoid valve	Connector	Terminal	Resistance (Approx.)
Torque converter clutch solenoid valve	F23	5 - Ground	5 - 20 Ω

OK or NG

OK >> GO TO 5.
NG >> Repair or replace damaged parts.

5. CHECK DTC

Perform AT-138, "DTC Confirmation Procedure" .

OK or NG

OK >> **INSPECTION END**
NG >> GO TO 6.

6. CHECK TCM

1. Check TCM input/output signals. Refer to AT-76, "TCM Terminals and Reference Value" .
2. If NG, recheck TCM pin terminals for damage or loose connection with harness connector.

OK or NG

OK >> **INSPECTION END**
NG >> Repair or replace damaged parts.

Component Inspection

ACS007SI

TORQUE CONVERTER CLUTCH SOLENOID VALVE

- For removal, refer to AT-251, "Control Valve Assembly and Accumulators" .

Resistance

- Check resistance between terminal and ground.

Solenoid valve	Terminal		Resistance (Approx.)
Torque converter clutch solenoid valve	5	Ground	5 - 20 Ω

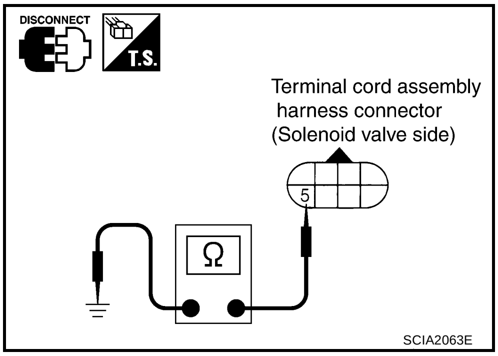

Operation

- Check solenoid valve by listening for its operating sound while applying battery voltage to the terminal and ground.

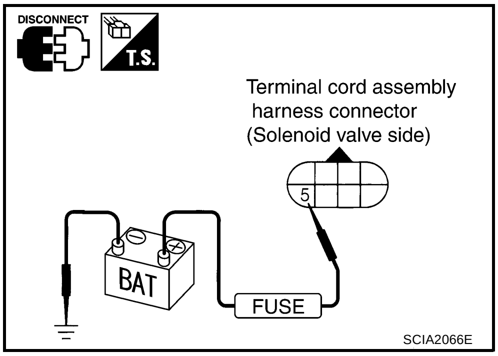

DTC P0744 A/T TCC S/V FUNCTION (LOCK-UP)

PFP:31940

Description

ACS007NF

- This is an OBD-II self-diagnostic item and not available in TCM self-diagnosis.
- This malfunction will not be detected while OD OFF indicator lamp is indicating another self-diagnosis malfunction.
- This malfunction is detected when A/T does not shift into fourth gear position or torque converter clutch does not lock-up as instructed by TCM. This is not caused by electrical malfunction (circuits open or shorted) but by mechanical malfunction such as control valve sticking, improper solenoid valve operation, malfunctioning oil pump or torque converter clutch, etc.

CONSULT-II Reference Value

ACS007Z6

Item name	Condition	Display value (Approx.)
TCC S/V DUTY	Lock-up OFF ⇔ Lock-up ON	4% ⇔ 94%

On Board Diagnosis Logic

ACS007NG

- This is an OBD-II self-diagnostic item.
- This diagnosis monitors actual gear position by checking the torque converter slip ratio calculated by TCM as follows:
  Torque converter slip ratio = A x C/B
  A: Output shaft revolution signal from revolution sensor
  B: Engine speed signal from ECM
  C: Gear ratio determined as gear position which TCM supposes
  If the actual gear position is much lower than the position (4th) supposed by TCM, the slip ratio will be much less than normal. In case the ratio does not reach the specified value, TCM judges this diagnosis malfunction.
  This malfunction will be caused when shift solenoid valve B is stuck closed.
- Gear positions supposed by TCM are as follows.
  In case of gear position with no malfunctions: 1, 2, 3 and 4 positions
  In case of gear position with shift solenoid valve B stuck closed: 1, 2, 2 and 1* positions to each gear position above
  *: P0744 is detected.
- Diagnostic trouble code “A/T TCC S/V FNCTN” with CONSULT-II is detected when A/T cannot perform lock-up even if electrical circuit is good.

Possible Cause

ACS007NH

- Line pressure solenoid valve
- Torque converter clutch solenoid valve
- Each clutch
- Hydraulic control circuit

DTC Confirmation Procedure

ACS007NI

CAUTION:

- **Always drive vehicle at a safe speed.**
- **If performing this "DTC Confirmation Procedure" again, always turn ignition switch OFF and wait at least 10 seconds before continuing.**

After the repair, perform the following procedure to confirm that the malfunction is eliminated.

WITH CONSULT-II

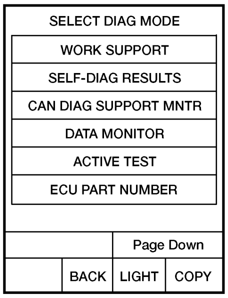

BCIA0031E

1. Start engine and select "DATA MONITOR" mode for "A/T" with CONSULT-II.
2. Make sure that output voltage of A/T fluid temperature sensor is within the range below.
   FLUID TEMP SE: 0.4 - 1.5 V
   If out of range, drive vehicle to decrease voltage (warm up the ATF) or stop engine to increase voltage (cool down the ATF).
3. Select "TCC S/V FNCTN P0744" of "DTC WORK SUPPORT" mode for "A/T" with CONSULT-II and touch "START".
4. Accelerate vehicle to more than 80 km/h (50 MPH) and maintain the following condition continuously until "TESTING" has turned to "COMPLETE". (It will take approximately 30 seconds after "TESTING" shows.)
   THROTTLE POSI: 1.0/8 - 2.0/8 (at all times during step 4)
   SLCT LVR POSI: "D" position
   TCC S/V DUTY: 94%
   VHCL/S SE-A/T: Constant speed of more than 80 km/h (50 MPH)

- **Make sure that "GEAR" shows "4".**
- **For shift schedule, refer to AT-65, "Vehicle Speed When Shifting Gears" .**
- **If "TESTING" does not appear on CONSULT-II for a long time, select "SELF-DIAG RESULTS" for "ENGINE". In case a 1st trip DTC other than "A/T TCC S/V FNCTN" is shown, refer to applicable "TROUBLE DIAGNOSIS FOR DTC".**

5. Make sure that "OK" is displayed. (If "NG" is displayed, refer to "Diagnostic Procedure".)
   Refer to AT-146, "Diagnostic Procedure" .
   Refer to AT-65, "Vehicle Speed When Performing and Releasing Lock-up" .

WITH GST

Follow the procedure "WITH CONSULT-II".

Wiring Diagram — AT — TCCSIG

ACS007X7

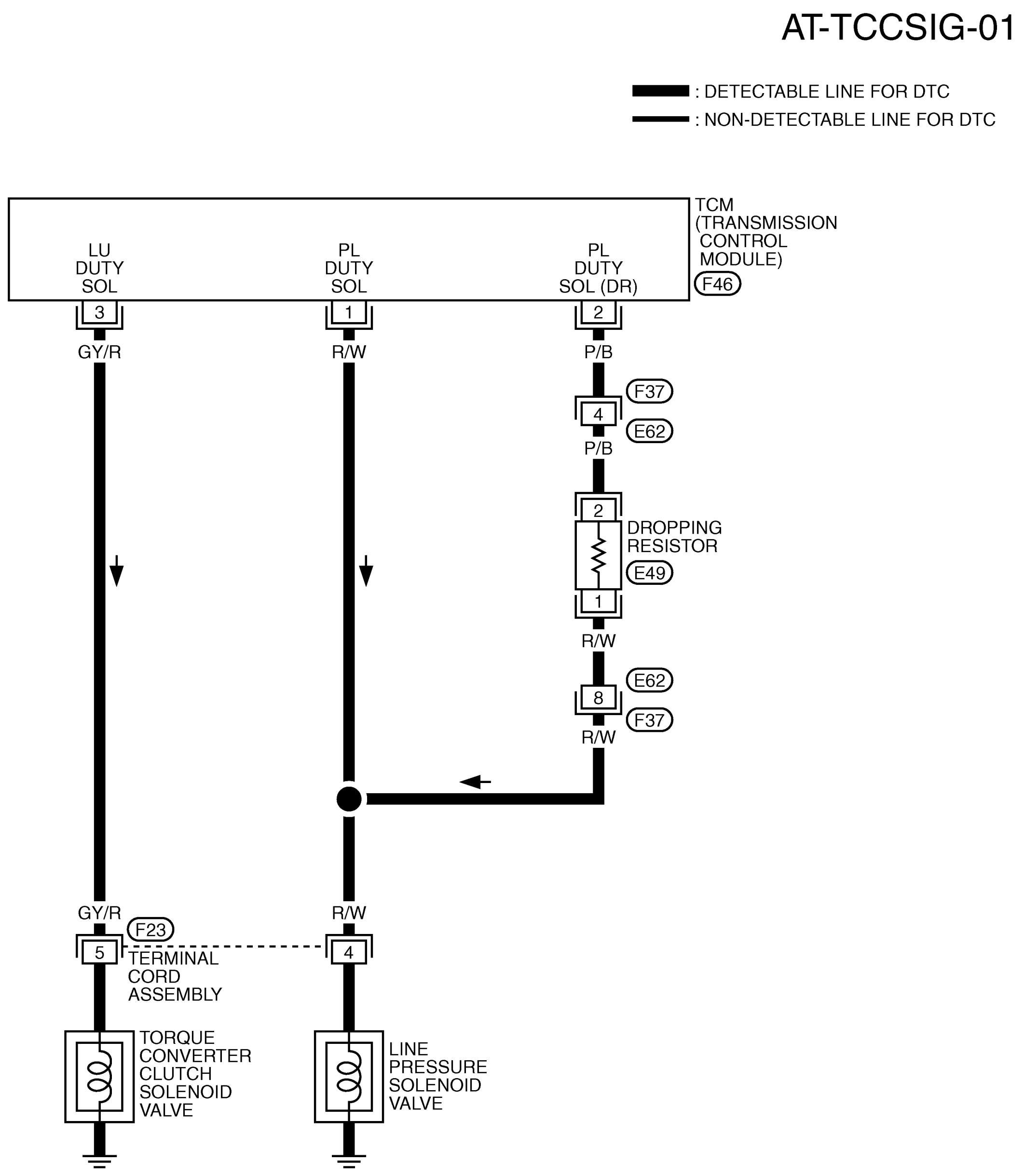

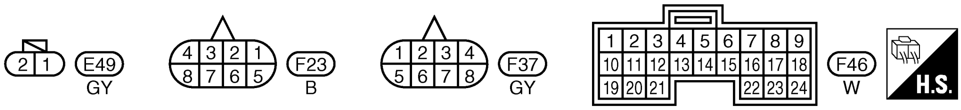

TCWB0009E

Data are reference value and are measured between each terminal and ground.

Terminal	Wire color	Item	Condition		Judgement standard (Approx.)
1	R/W	Line pressure solenoid valve		When releasing accelerator pedal after warming up engine.	1.5 - 3.0 V
				When depressing accelerator pedal fully after warming up engine.	0 V
2	P/B	Line pressure solenoid valve (with dropping resistor)		When releasing accelerator pedal after warming up engine.	5 - 14 V
				When depressing accelerator pedal fully after warming up engine.	0 V
3	GY/R	Torque converter clutch solenoid valve		When A/T performs lock-up.	8 - 15 V
				When A/T does not perform lock-up.	0 V

ACS007XA

Diagnostic Procedure

1. CHECK SHIFT-UP (D_3 TO D_4)

During AT-59, "Cruise Test — Part 1" .

Does A/T shift from D_3 to D_4 at the specified speed?

YES >> GO TO 11.
NO >> GO TO 2.

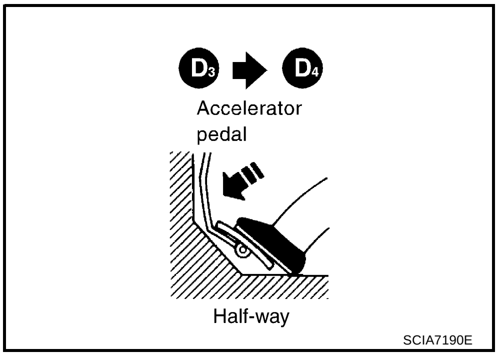

2. CHECK LINE PRESSURE

Perform line pressure test. Refer to AT-54, "LINE PRESSURE TEST" .

Engine speed	Line pressure kPa (kg/cm^2 , psi)	
	“D”, “2” and “1” positions	“R” position
At idle speed	500 (5.1, 73)	778 (7.9, 113)
At stall speed	1,233 (12.6, 179)	1,918 (19.6, 278)

OK or NG

OK >> GO TO 3.
NG >> GO TO 6.

3. CHECK CONTROL VALVE

1. Disassemble control valve assembly. Refer to AT-295, "Control Valve Assembly" .
2. Check to ensure that:
- Valve, sleeve and plug slide along valve bore under their own weight.
- Valve, sleeve and plug are free from burrs, dents and scratches.
- Control valve springs are free from damage, deformation and fatigue.
- Hydraulic line is free from obstacles.

OK or NG

OK >> GO TO 4.
NG >> Repair or replace control valve.

4. CHECK SHIFT-UP (D_3 TO D_4)

During AT-59, "Cruise Test — Part 1" .

Does A/T shift from D_3 to D_4 at the specified speed?

YES >> GO TO 5.
NO >> Check control valve again. Repair or replace control valve assembly.

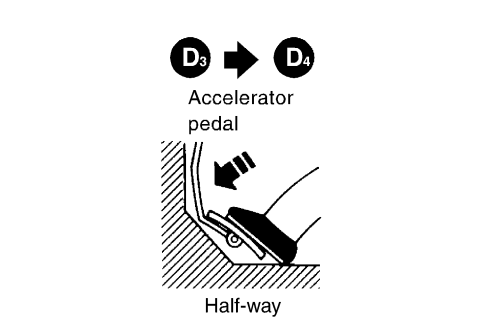

SCIA7190E

5. CHECK DTC

Perform AT-144, "DTC Confirmation Procedure" .

OK or NG

OK >> **INSPECTION END**
NG >> GO TO 11.

6. CHECK VALVE RESISTANCE

1. Remove control valve assembly. Refer to AT-251, "Control Valve Assembly and Accumulators" .
- Line pressure solenoid valve
2. Check resistance between terminal cord assembly harness connector terminal and ground.

Solenoid valve	Terminal		Resistance (Approx.)
Line pressure solenoid valve	4	Ground	2.5 - 5 Ω

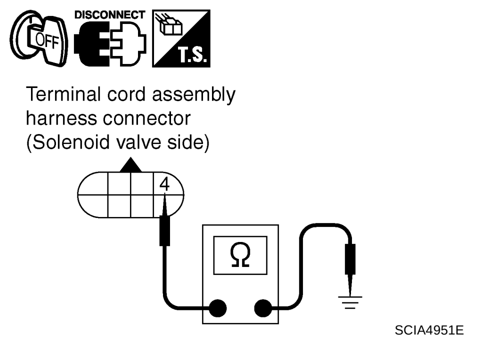

SCIA4951E

OK or NG

OK >> GO TO 7.
NG >> Replace solenoid valve assembly.

7. CHECK VALVE OPERATION

1. Remove control valve assembly. Refer to AT-251, "Control Valve Assembly and Accumulators" .
- Line pressure solenoid valve
2. Check solenoid valve by listening for its operating sound while applying battery voltage to the terminal and ground.

OK or NG

OK >> GO TO 8.
NG >> Replace solenoid valve assembly.

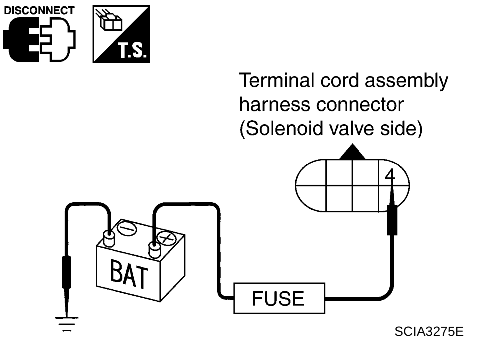

SCIA3275E

8. CHECK CONTROL VALVE

1. Disassemble control valve assembly. Refer to AT-295, "Control Valve Assembly" .
2. Check line pressure circuit valves for sticking.
- Pressure regulator valve
- Pilot valve
- Pressure modifier valve

OK or NG

OK >> GO TO 9.
NG >> Repair or replace control valve.

9. CHECK SHIFT-UP (D_3 TO D_4)

During AT-59, "Cruise Test — Part 1" .

Does A/T shift from D_3 to D_4 at the specified speed?

YES >> GO TO 10.
NO >> Check control valve again. Repair or replace control valve assembly.

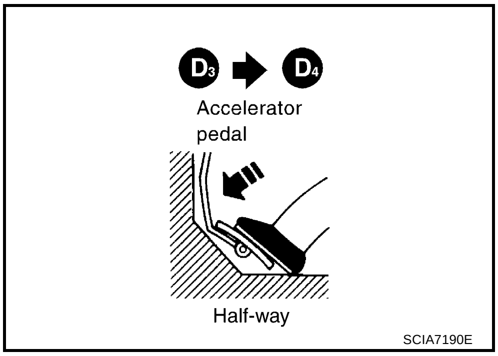

10. CHECK DTC

Perform AT-144, "DTC Confirmation Procedure" .

OK or NG

OK >> **INSPECTION END**
NG >> GO TO 11.

11. CHECK LOCK-UP

During AT-59, "Cruise Test — Part 1" .

A/T perform lock-up at the specified speed?

YES >> Perform AT-59, "Cruise Test — Part 1" again and return to the start point of this test group.
NO >> GO TO 12.

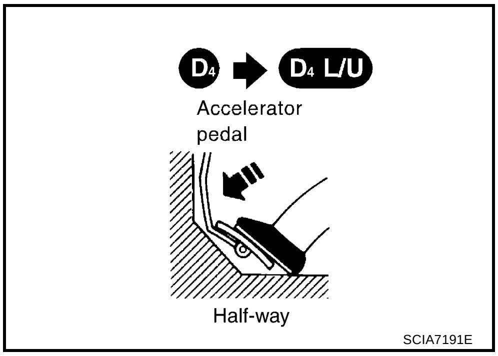

12. CHECK VALVE RESISTANCE

1. Remove control valve assembly. Refer to AT-251, "Control Valve Assembly and Accumulators" .
– Torque converter clutch solenoid valve
2. Check resistance between terminal cord assembly harness connector terminal and ground.

Solenoid valve	Terminal		Resistance (Approx.)
Torque converter clutch solenoid valve	5	Ground	5 - 20 Ω

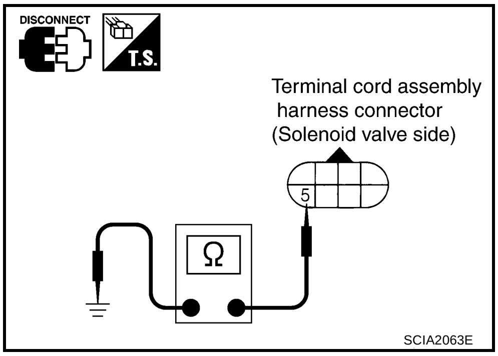

SCIA2063E

OK or NG

OK >> GO TO 13.
NG >> Replace solenoid valve assembly.

13. CHECK VALVE OPERATION

1. Remove control valve assembly. Refer to AT-251, "Control Valve Assembly and Accumulators" .
– Torque converter clutch solenoid valve
2. Check solenoid valve by listening for its operating sound while applying battery voltage to the terminal and ground.

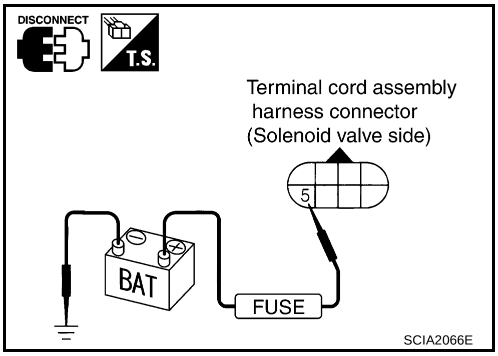

SCIA2066E

OK or NG

OK >> GO TO 14.
NG >> Replace solenoid valve assembly.

14. CHECK CONTROL VALVE

1. Disassemble control valve assembly. Refer to AT-295, "Control Valve Assembly" .
2. Check control valves for sticking.
– Torque converter clutch control valve
– Torque converter clutch relief valve

OK or NG

OK >> GO TO 15.
NG >> Repair or replace control valve.

15. CHECK LOCK-UP

During AT-59, "Cruise Test — Part 1" .

A/T perform lock-up at the specified speed?

YES >> GO TO 16.
NO >> Check control valve again. Repair or replace control valve assembly.

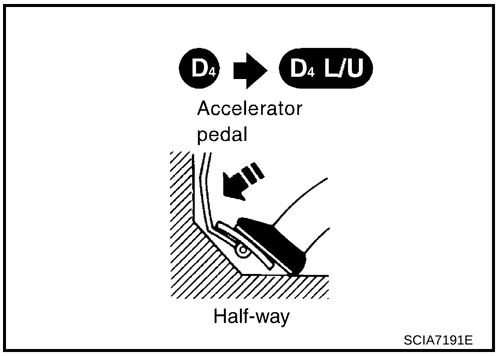

SCIA7191E

16. CHECK DTC

Perform AT-144, "DTC Confirmation Procedure" .

OK or NG

OK >> **INSPECTION END**

NG >> Perform AT-59, "Cruise Test — Part 1" again and return to the start point of this test group.

DTC P0745 LINE PRESSURE SOLENOID VALVE

PFP:31940

Description

ACS007SJ

Line pressure solenoid valve regulates oil pump discharge pressure to suit the driving condition in response to signals sent from TCM.

The line pressure duty cycle value is not consistent when the closed throttle position switch is ON. To confirm the line pressure duty cycle at low pressure, accelerator (throttle) should be open until the closed throttle position switch is OFF.

CONSULT-II Reference Value

ACS007Z8

Item name	Condition	Display value (Approx.)
LINE PRES DTY	Small throttle opening (Low line pressure) ⇔ Large throttle opening (High line pressure)	0% ⇔ 92%

On Board Diagnosis Logic

ACS007SK

- This is an OBD-II self-diagnostic item.
- Diagnostic trouble code “LINE PRESSURE S/V” with CONSULT-II or 10th judgement flicker without CONSULT-II is detected when TCM detects an improper voltage drop when it tries to operate the solenoid valve.

Possible Cause

ACS007SL

- Harness or connector
  (The solenoid circuit is open shorted.)
- Line pressure solenoid valve

DTC Confirmation Procedure

ACS007SM

CAUTION:

If performing this “DTC Confirmation Procedure” again, always turn ignition switch OFF and wait at least 10 seconds before continuing.

After the repair, perform the following procedure to confirm that the malfunction is eliminated.

WITH CONSULT-II

1. Turn ignition switch ON and select “DATA MONITOR” mode for “A/T” with CONSULT-II.
2. Depress accelerator pedal completely and wait at least 5 seconds.
3. If check result is NG, go to AT-153, "Diagnostic Procedure" .

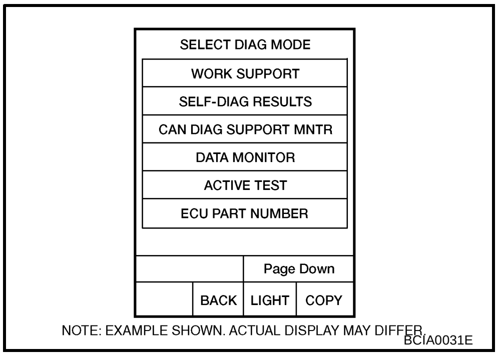

WITH GST

Follow the procedure “WITH CONSULT-II”.

WITHOUT CONSULT-II

1. Start engine.
2. With brake pedal depressed, shift the lever from “P” → “N” → “D” → “N” → “P” positions.
3. Perform self-diagnosis. Refer to AT-89, "Diagnostic Procedure Without CONSULT-II" .
4. If the check result is NG, go to AT-153, "Diagnostic Procedure" .

Wiring Diagram — AT — LPSV

ACS007SN

AT-LPSV-01

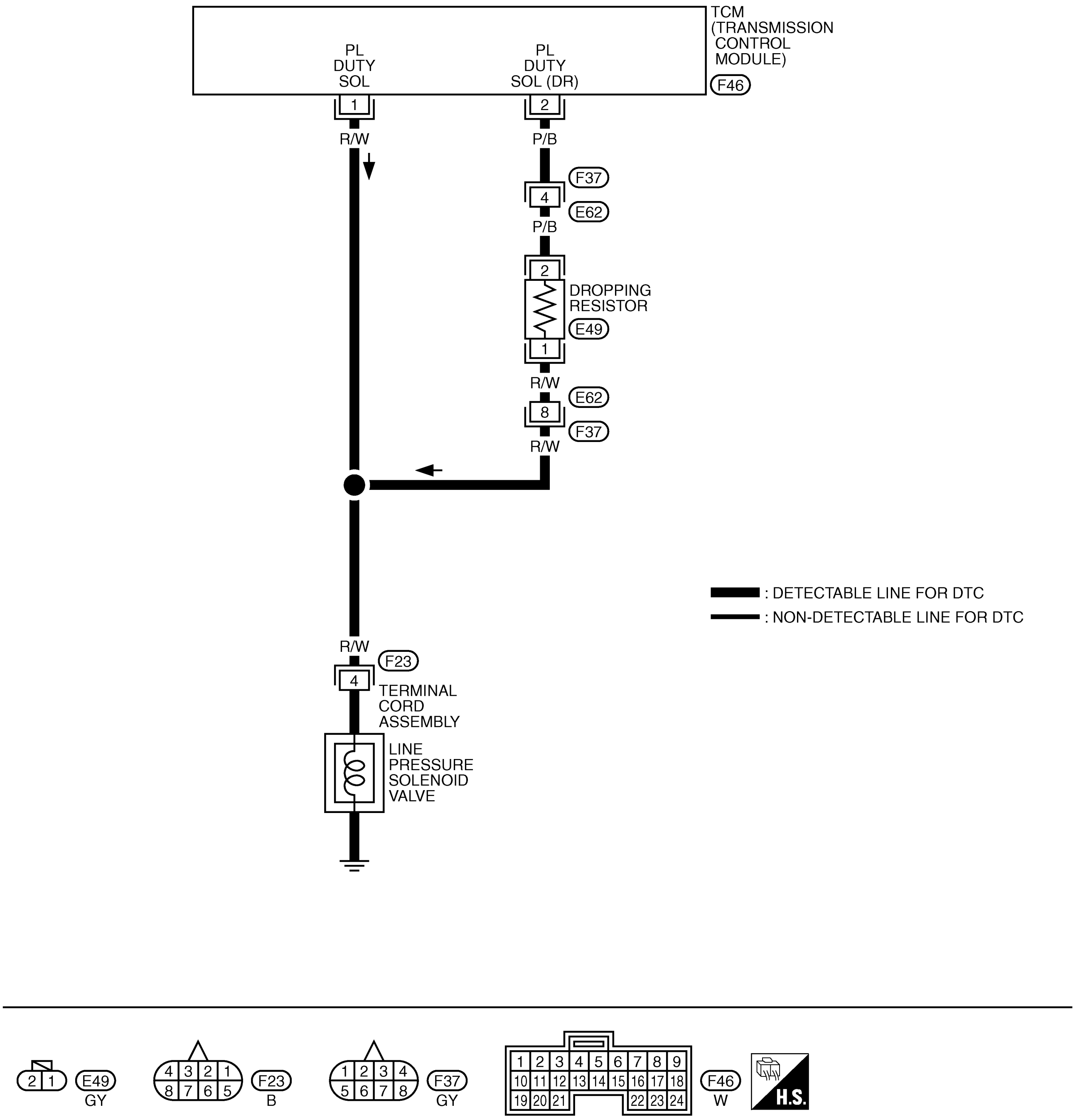

TCWA0046E

Data are reference value and are measured between each terminal and ground.

Terminal	Wire color	Item	Condition		Judgement standard (Approx.)
1	R/W	Line pressure solenoid valve		When releasing accelerator pedal after warming up engine.	1.5 - 3.0 V
				When depressing accelerator pedal fully after warming up engine.	0 V
2	P/B	Line pressure solenoid valve (with dropping resistor)		When releasing accelerator pedal after warming up engine.	5 - 14 V
				When depressing accelerator pedal fully after warming up engine.	0 V

Diagnostic Procedure

ACS007SO

1. CHECK INPUT SIGNAL

With CONSULT-II

1. Turn ignition switch ON. (Do not start engine.)
2. Select “MAIN SIGNALS” in “DATA MONITOR” mode for “A/T” with CONSULT-II.
3. Read out the value of “LINE PRES DTY” while driving.
   Check the value changes according to driving speed.

Item name	Condition	Display value (Approx.)
LINE PRES DTY	Small throttle opening (Low line pressure) ⇔ Large throttle opening (High line pressure)	0% ⇔ 92%

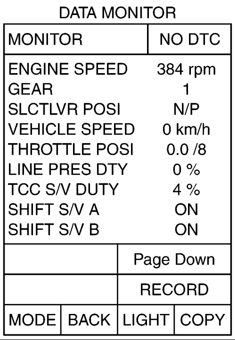

SCIA3251E

Without CONSULT-II

1. Turn ignition switch ON. (Do not start engine.)
2. Check voltage between TCM connector terminals and ground.

Item	Connector	Terminal	Condition	Judgement standard (Approx.)
Line pressure solenoid valve	F46	1 - Ground	When releasing accelerator pedal after warming up engine.	1.5 - 3.0 V
			When depressing accelerator pedal fully after warming up engine.	0 V
Line pressure solenoid valve (with dropping resistor)	F46	2 - Ground	When releasing accelerator pedal after warming up engine.	5 - 14 V
			When depressing accelerator pedal fully after warming up engine.	0 V

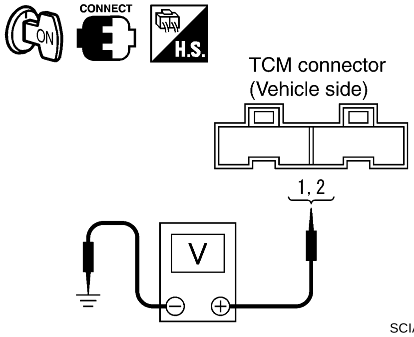

SCIA3267E

OK or NG

OK >> GO TO 5.
NG >> GO TO 2.

2. CHECK DROPPING RESISTOR

1. Turn ignition switch OFF.
2. Disconnect dropping resistor harness connector in engine room.
3. Check resistance between terminals.

Item	Connector	Terminal	Resistance (Approx.)
Dropping resistor	E49	1 - 2	12 Ω

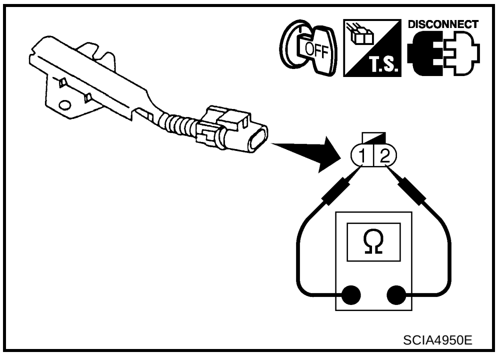

OK or NG

OK >> GO TO 3.
NG >> Repair or replace damaged parts.

3. CHECK VALVE RESISTANCE

1. Turn ignition switch OFF.
2. Disconnect terminal cord assembly connector in engine room.
3. Check resistance between terminal cord assembly harness connector terminal and ground.

Solenoid valve	Connector	Terminal	Resistance (Approx.)
Line pressure solenoid valve	F23	4 - Ground	2.5 - 5.0 Ω

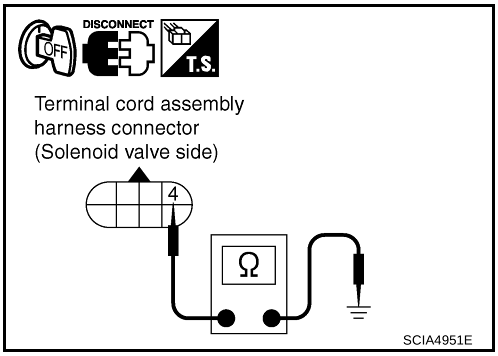

OK or NG

OK >> GO TO 4.
NG >> Repair or replace damaged parts.

4. CHECK HARNESS BETWEEN TCM AND TERMINAL CORD ASSEMBLY HARNESS CONNECTOR

1. Turn ignition switch OFF.
2. Disconnect terminal cord assembly harness connector and TCM connector.
3. Check continuity between terminal cord assembly harness connector terminal and TCM connector terminal.

Item	Connector	Terminal	Continuity
TCM connector	F46	1	Yes
Terminal cord assembly harness connector	F23	4	

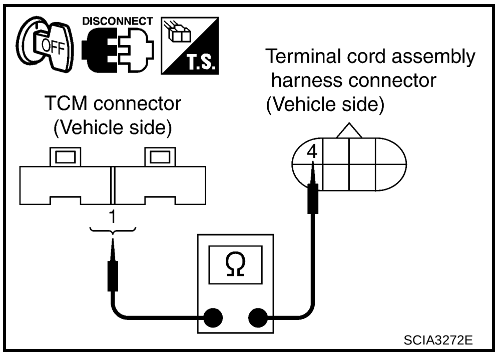

4. Check continuity between terminal cord assembly harness connector terminal and dropping resistor harness connector terminal.

Item	Connector	Terminal	Continuity
Dropping resistor harness connector	E49	1	Yes
Terminal cord assembly harness connector	F23	4	

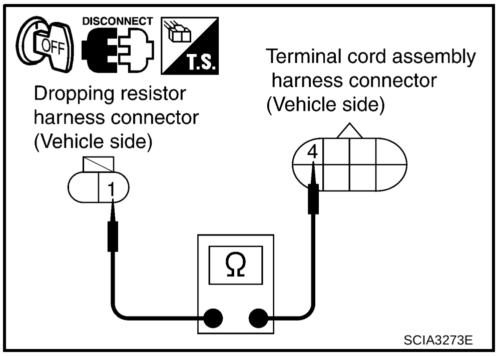

5. Check continuity between dropping resistor harness connector terminal and TCM connector terminal.

Item	Connector	Terminal	Continuity
TCM connector	F46	2	Yes
Dropping resistor harness connector	E49	2	

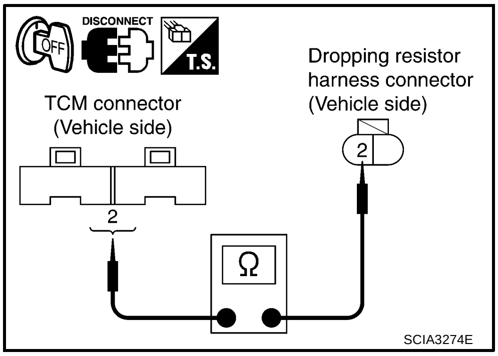

6. If OK, check harness for short to ground and short to power.
7. Reinstall any part removed.

OK or NG

OK >> GO TO 5.
NG >> Repair open circuit or short to ground or short to power in harness or connectors.

5. CHECK DTC

Perform AT-151, "DTC Confirmation Procedure" .

OK or NG

OK >> **INSPECTION END**
NG >> GO TO 6.

6. CHECK TCM

1. Check TCM input/output signals. Refer to AT-76, "TCM Terminals and Reference Value" .
2. If NG, recheck TCM pin terminals for damage or loose connection with harness connector.

OK or NG

OK >> **INSPECTION END**
NG >> Repair or replace damaged parts.

Component Inspection

ACS007SP

LINE PRESSURE SOLENOID VALVE

- For removal, refer to AT-251, "Control Valve Assembly and Accumulators" .

Resistance

- Check resistance between terminal and ground.

Solenoid valve	Terminal		Resistance (Approx.)
Line pressure solenoid valve	4	Ground	2.5 - 5.0 Ω

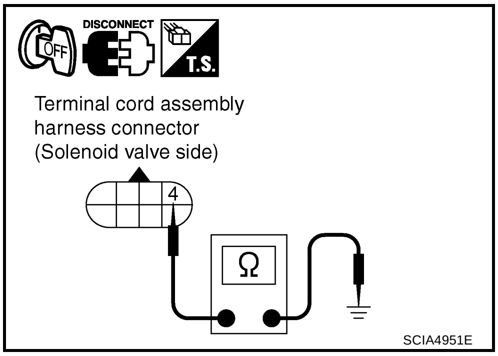

SCIA4951E

Operation

- Check solenoid valve by listening for its operating sound while applying battery voltage to the terminal and ground.

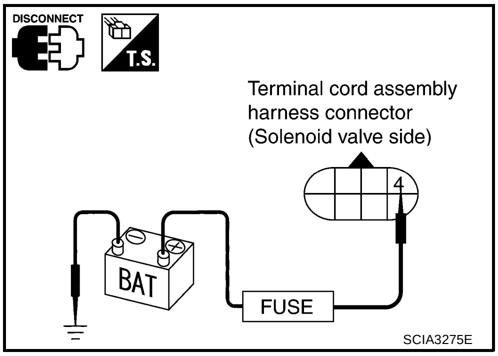

SCIA3275E

DROPPING RESISTOR

- Check resistance between terminals.

Item	Connector	Terminal	Resistance (Approx.)
Dropping resistor	E49	1 - 2	12 Ω

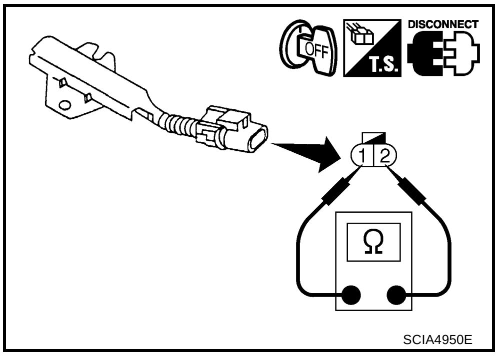

SCIA4950E

DTC P0750 SHIFT SOLENOID VALVE A

PFP:31940

Description

ACS007SQ

Shift solenoid valves A and B are turned ON or OFF by TCM in response to signals sent from PNP switch, vehicle speed and ECM (throttle opening). Gears will then be shifted to the optimum position.

Gear position	1	2	3	4
Shift solenoid valve A	ON (Closed)	OFF (Open)	OFF (Open)	ON (Closed)
Shift solenoid valve B	ON (Closed)	ON (Closed)	OFF (Open)	OFF (Open)

CONSULT-II Reference Value

ACS007Z9

Item name	Condition	Display value
SHIFT S/V A	When shift solenoid valve A operates. (When driving in “D1 ” or “D4 ”.)	ON
	When shift solenoid valve A does not operate. (When driving in “D2 ” or “D3 ”.)	OFF

On Board Diagnosis Logic

ACS007SR

- This is an OBD-II self-diagnostic item.
- Diagnostic trouble code “SHIFT SOLENOID/V A” with CONSULT-II or 4th judgement flicker without CONSULT-II is detected when TCM detects an improper voltage drop when it tries to operate the solenoid valve.

Possible Cause

ACS007SS

- Harness or connector
  (The solenoid circuit is open or shorted.)
- Shift solenoid valve A

DTC Confirmation Procedure

ACS007ST

CAUTION:

- **Always drive vehicle at a safe speed.**
- **If performing this “DTC Confirmation Procedure” again, always turn ignition switch OFF and wait at least 10 seconds before continuing.**

After the repair, perform the following procedure to confirm that the malfunction is eliminated.

WITH CONSULT-II

1. Turn ignition switch ON and select “DATA MONITOR” mode for “A/T” with CONSULT-II.
2. Start engine.
3. Drive vehicle in “D” position and allow the transaxle to shift “1” → “2” (“GEAR”).
4. If the check result is NG, go to AT-159, "Diagnostic Procedure" .

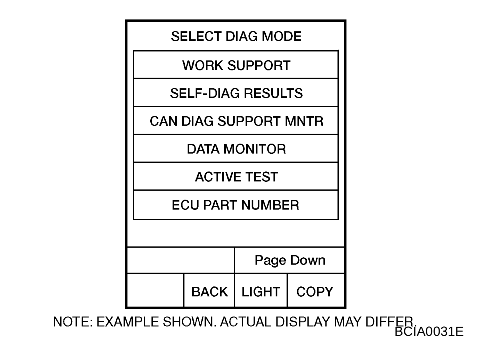

BCIA0031E

WITH GST

Follow the procedure “WITH CONSULT-II”.

WITHOUT CONSULT-II

1. Start engine.
2. Drive vehicle in “D1 ”→ “D2 ” position.
3. Perform self-diagnosis. Refer to AT-89, "Diagnostic Procedure Without CONSULT-II" .
4. If the check result is NG, go to AT-159, "Diagnostic Procedure" .

A B AT D E F G H I J K L M

Wiring Diagram — AT — SSV/A

ACS007SU

AT-SSV/A-01

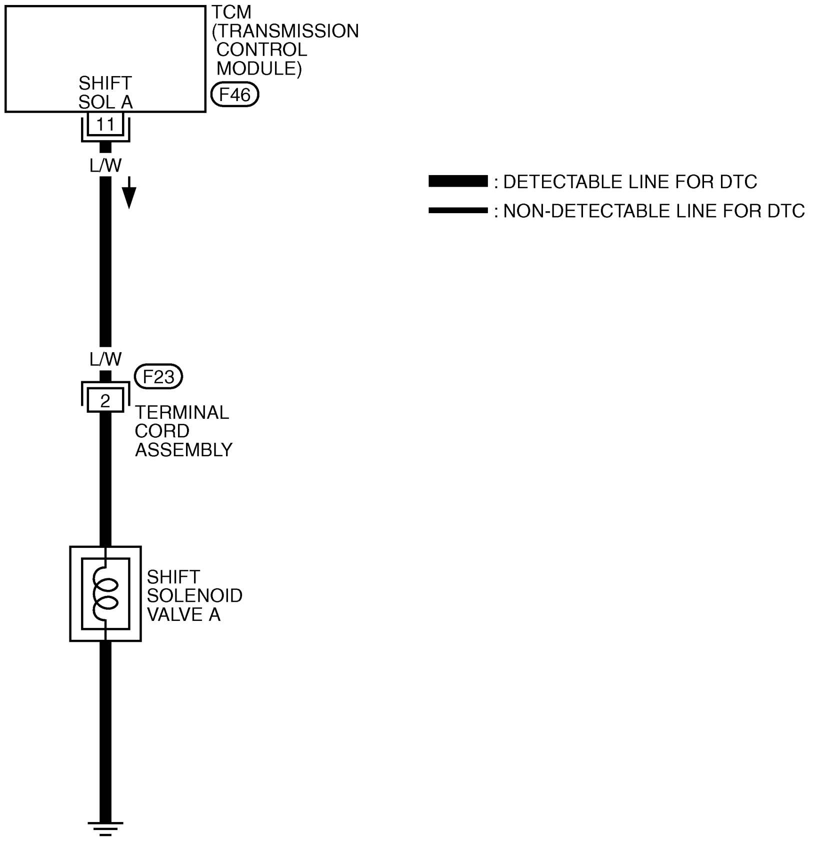

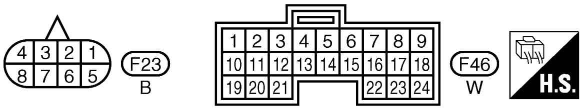

TCWA0040E

Data are reference value and are measured between each terminal and ground.

Terminal	Wire color	Item	Condition		Judgement standard (Approx.)
11	L/W	Shift solenoid valve A	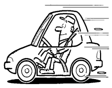	When shift solenoid valve A operates. (When driving in “D_1 ” or “D_4 ”.)	Battery voltage
				When shift solenoid valve A does not operate. (When driving in “D_2 ” or “D_3 ”.)	0 V

Diagnostic Procedure

ACS007SV

1. CHECK INPUT SIGNAL

With CONSULT-II

1. Start engine.
2. Select “MAIN SIGNALS” in “DATA MONITOR” mode for “A/T” with CONSULT-II.
3. Read out the value of “SHIFT S/V A” while driving.
   Check the value changes according to driving speed.

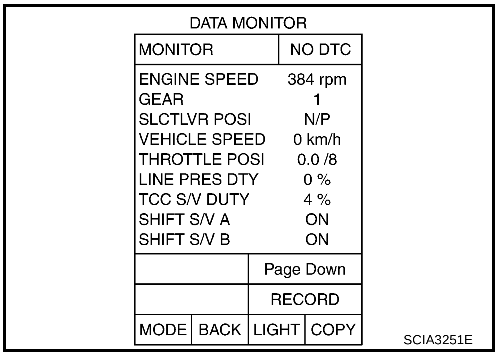

SCIA3251E

Item name	Condition	Display value
SHIFT S/V A	When shift solenoid valve A operates. (When driving in “D_1 ” or “D_4 ”.)	ON
	When shift solenoid valve A does not operate. (When driving in “D_2 ” or “D_3 ”.)	OFF

Without CONSULT-II

1. Start engine.
2. Check voltage between TCM connector terminal and ground.

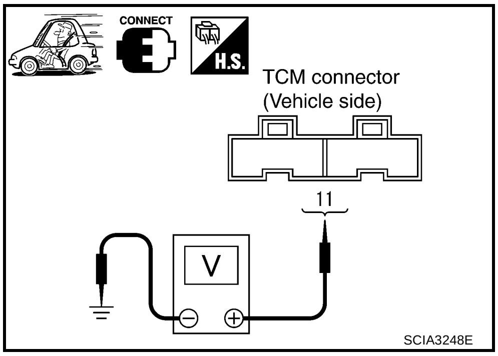

SCIA3248E

Item	Connector	Terminal	Condition	Judgement standard (Approx.)
Shift solenoid valve A	F46	11 - Ground	When shift solenoid valve A operates. (When driving in “D_1 ” or “D_4 ”.)	Battery voltage
			When shift solenoid valve A does not operate. (When driving in “D_2 ” or “D_3 ”.)	0 V

OK or NG

OK >> GO TO 5.
NG >> GO TO 2.

2. CHECK SHIFT SOLENOID VALVE A CIRCUIT

1. Turn ignition switch OFF.
2. Disconnect TCM connector.
3. Check resistance between TCM connector terminal and ground.

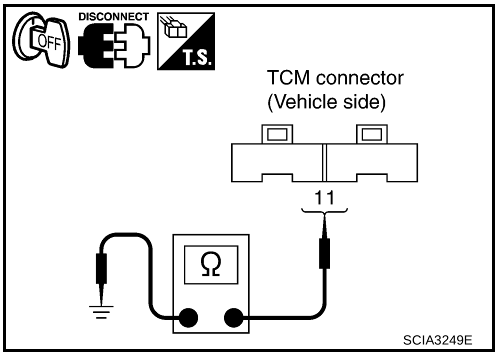

Solenoid valve	Connector	Terminal	Resistance (Approx.)
Shift solenoid valve A	F46	11 - Ground	20 - 30 Ω

OK or NG

OK >> GO TO 5.
NG >> GO TO 3.

3. CHECK HARNESS BETWEEN TCM AND TERMINAL CORD ASSEMBLY HARNESS CONNECTOR

1. Turn ignition switch OFF.
2. Disconnect terminal cord assembly harness connector and TCM connector.
3. Check continuity between terminal cord assembly harness connector terminal and TCM connector terminal.

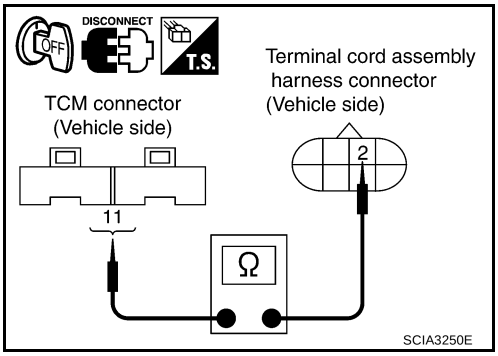

Item	Connector	Terminal	Continuity
TCM connector	F46	11	Yes
Terminal cord assembly harness connector	F23	2	

4. If OK, check harness for short to ground and short to power.
5. Reinstall any part removed.

OK or NG

OK >> GO TO 4.
NG >> Repair open circuit or short to ground or short to power in harness or connectors.

4. CHECK VALVE RESISTANCE

1. Turn ignition switch OFF.
2. Disconnect terminal cord assembly harness connector in engine room.
3. Check resistance between terminal cord assembly harness connector terminal and ground.

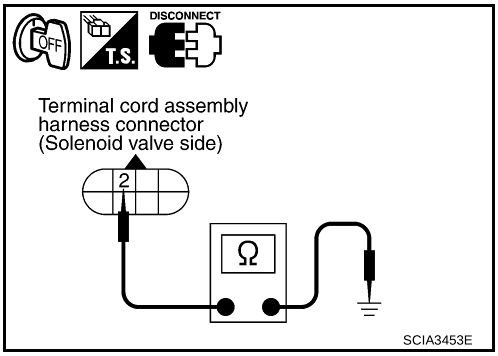

Solenoid valve	Connector	Terminal	Resistance (Approx.)
Shift solenoid valve A	F23	2 - Ground	20 - 30 Ω

4. If OK, check continuity between ground and transaxle assembly.

OK or NG

OK >> GO TO 5.
NG >> Repair or replace damaged parts.

5. CHECK DTC

Perform AT-157, "DTC Confirmation Procedure" .

OK or NG

OK >> **INSPECTION END**
NG >> GO TO 6.

6. CHECK TCM

1. Check TCM input/output signals. Refer to AT-76, "TCM Terminals and Reference Value" .
2. If NG, recheck TCM pin terminals for damage or loose connection with harness connector.

OK or NG

OK >> **INSPECTION END**
NG >> Repair or replace damaged parts.

Component Inspection

ACS007SW

SHIFT SOLENOID VALVE A

- For removal, refer to AT-251, "Control Valve Assembly and Accumulators" .

Resistance

- Check resistance between terminal and ground.

Solenoid valve	Terminal		Resistance (Approx.)
Shift solenoid valve A	2	Ground	20 - 30 Ω

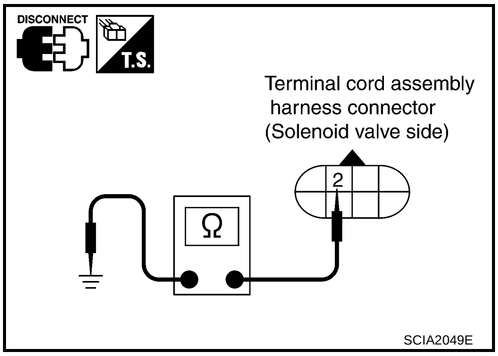

SCIA2049E

Operation

- Check solenoid valve by listening for its operating sound while applying battery voltage to the terminal and ground.

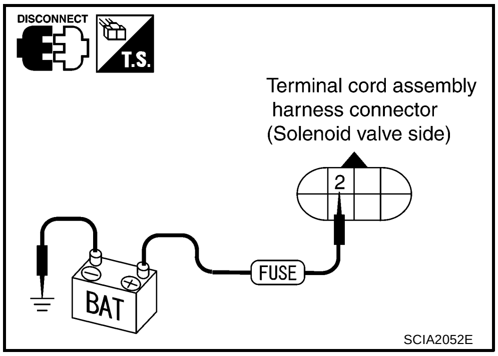

SCIA2052E

DTC P0755 SHIFT SOLENOID VALVE B

PFP:31940

Description

ACS007SX

Shift solenoid valves A and B are turned ON or OFF by TCM in response to signals sent from PNP switch, vehicle speed and ECM (throttle opening). Gears will then be shifted to the optimum position.

Gear position	1	2	3	4
Shift solenoid valve A	ON (Closed)	OFF (Open)	OFF (Open)	ON (Closed)
Shift solenoid valve B	ON (Closed)	ON (Closed)	OFF (Open)	OFF (Open)

CONSULT-II Reference Value

ACS007ZA

Item name	Condition	Display value
SHIFT S/V B	When shift solenoid valve B operates. (When driving in “D1 ” or “D2 ”.)	ON
	When shift solenoid valve B does not operate. (When driving in “D3 ” or “D4 ”.)	OFF

On Board Diagnosis Logic

ACS007SY

- This is an OBD-II self-diagnostic item.
- Diagnostic trouble code “SHIFT SOLENOID/V B” with CONSULT-II or 5th judgement flicker without CONSULT-II is detected when TCM detects an improper voltage drop when it tries to operate the solenoid valve.

Possible Cause

ACS007SZ

- Harness or connector
  (The solenoid circuit is open or shorted.)
- Shift solenoid valve B

DTC Confirmation Procedure

ACS007T0

CAUTION:

- **Always drive vehicle at a safe speed.**
- **If performing this “DTC Confirmation Procedure” again, always turn ignition switch OFF and wait at least 10 seconds before continuing.**

After the repair, perform the following procedure to confirm that the malfunction is eliminated.

WITH CONSULT-II

1. Turn ignition switch ON and select “DATA MONITOR” mode for “A/T” with CONSULT-II.
2. Start engine.
3. Drive vehicle in “D” position and allow the transaxle to shift “1” → “2” → “3” (“GEAR”).
4. If the check result is NG, go to AT-164, "Diagnostic Procedure" .

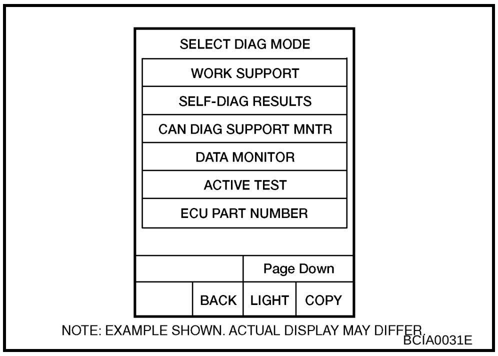

BCIA0031E

WITH GST

Follow the procedure “WITH CONSULT-II”.

WITHOUT CONSULT-II

1. Start engine.
2. Drive vehicle in “D1 ” → “D2 ” → “D3 ” position.
3. Perform self-diagnosis. Refer to AT-89, "Diagnostic Procedure Without CONSULT-II" .
4. If the check result is NG, go to AT-164, "Diagnostic Procedure" .

Wiring Diagram — AT — SSV/B

ACS007T1

AT-SSV/B-01

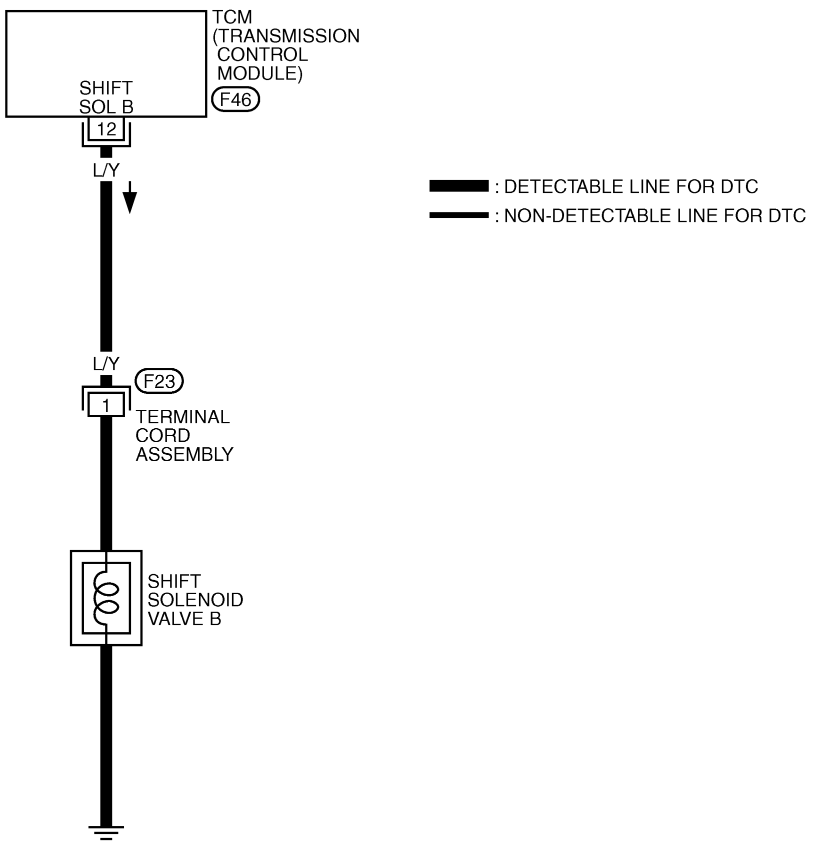

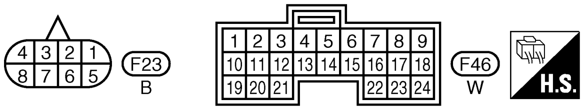

TCWA0041E

Data are reference value and are measured between each terminal and ground.

Terminal	Wire color	Item	Condition		Judgement standard (Approx.)
12	L/Y	Shift solenoid valve B	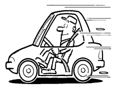	When shift solenoid valve B operates. (When driving in “D1 ” or “D2 ”.)	Battery voltage
				When shift solenoid valve B does not operate. (When driving in “D3 ” or “D4 ”.)	0 V

Diagnostic Procedure

ACS007T2

1. CHECK INPUT SIGNAL

With CONSULT-II

1. Start engine.
2. Select “MAIN SIGNALS” in “DATA MONITOR” mode for “A/T” with CONSULT-II.
3. Read out the value of “SHIFT S/V B” while driving.
   Check the value changes according to driving speed.

Item name	Condition	Display value
SHIFT S/V B	When shift solenoid valve B operates. (When driving in “D1 ” or “D2 ”.)	ON
	When shift solenoid valve B does not operate. (When driving in “D3 ” or “D4 ”.)	OFF

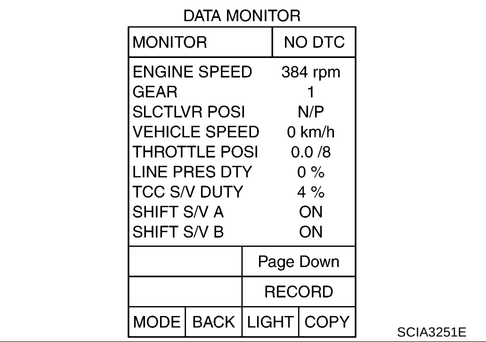

SCIA3251E

Without CONSULT-II

1. Start engine.
2. Check voltage between TCM connector terminal and ground.

Item	Connector	Terminal	Condition	Judgement standard (Approx.)
Shift solenoid valve B	F46	12 - Ground	When shift solenoid valve B operates. (When driving in “D1 ” or “D2 ”.)	Battery voltage
			When shift solenoid valve B does not operate. (When driving in “D3 ” or “D4 ”.)	0 V

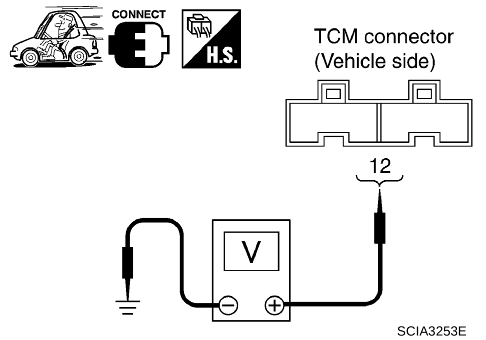

SCIA3253E

OK or NG

OK >> GO TO 5.
NG >> GO TO 2.

A
B
AT
D
E
F
G
H
I
J
K
L
M

2. CHECK SHIFT SOLENOID VALVE B CIRCUIT

1. Turn ignition switch OFF.
2. Disconnect TCM connector.
3. Check resistance between TCM connector terminal and ground.

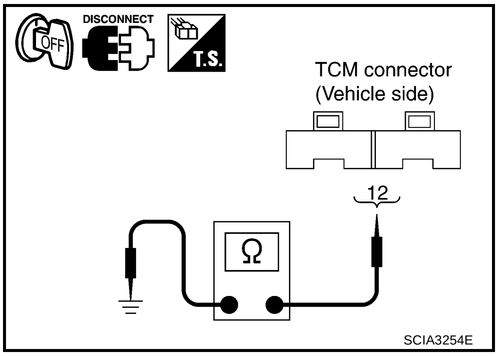

Solenoid valve	Connector	Terminal	Resistance (Approx.)
Shift solenoid valve B	F46	12 - Ground	5 - 20 Ω

OK or NG

OK >> GO TO 5.
NG >> GO TO 3.

3. CHECK HARNESS BETWEEN TCM AND TERMINAL CORD ASSEMBLY HARNESS CONNECTOR

1. Turn ignition switch OFF.
2. Disconnect terminal cord assembly harness connector and TCM connector.
3. Check continuity between terminal cord assembly harness connector terminal and TCM connector terminal.

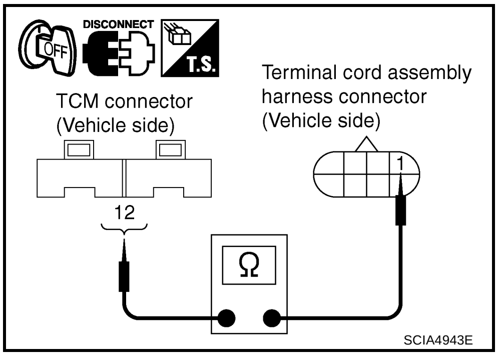

Item	Connector	Terminal	Continuity
TCM connector	F46	12	Yes
Terminal cord assembly harness connector	F23	1	

4. If OK, check harness for short to ground and short to power.
5. Reinstall any part removed.

OK or NG

OK >> GO TO 4.
NG >> Repair open circuit or short to ground or short to power in harness or connectors.

4. CHECK VALVE RESISTANCE

1. Turn ignition switch OFF.
2. Disconnect terminal cord assembly harness connector in engine room.
3. Check resistance between terminal cord assembly harness connector terminal and ground.

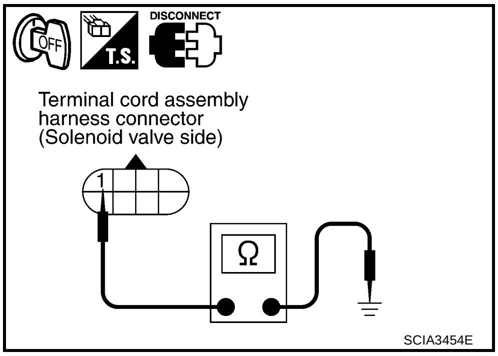

Solenoid valve	Connector	Terminal	Resistance (Approx.)
Shift solenoid valve B	F23	1 - Ground	5 - 20 Ω

4. If OK, check continuity between ground and transaxle assembly.

OK or NG

OK >> GO TO 5.
NG >> Repair or replace damaged parts.

5. CHECK DTC

Perform AT-162, "DTC Confirmation Procedure" .

OK or NG

OK >> **INSPECTION END**
NG >> GO TO 6.

6. **CHECK TCM**

1. Check TCM input/output signals. Refer to AT-76, "TCM Terminals and Reference Value" .
2. If NG, recheck TCM pin terminals for damage or loose connection with harness connector.

OK or NG

OK >> **INSPECTION END**
NG >> Repair or replace damaged parts.

Component Inspection

ACS007T3

SHIFT SOLENOID VALVE B

- For removal, refer to AT-251, "Control Valve Assembly and Accumulators" .

Resistance

- Check resistance between terminal and ground.

Solenoid valve	Terminal		Resistance (Approx.)
Shift solenoid valve B	1	Ground	5 - 20 Ω

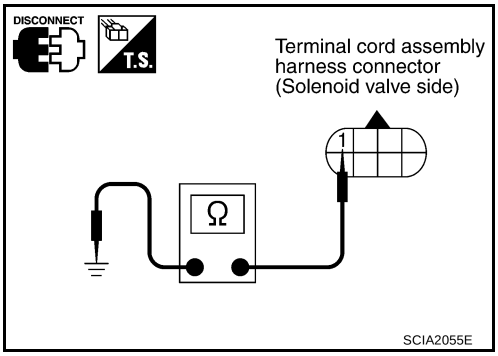

Operation

- Check solenoid valve by listening for its operating sound while applying battery voltage to the terminal and ground.

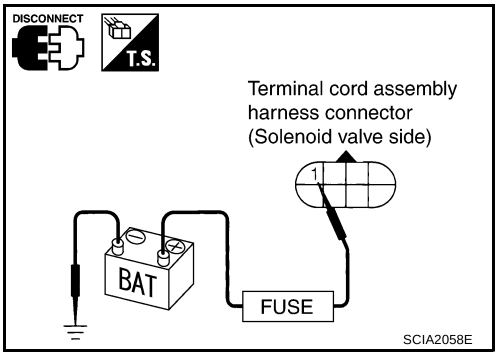

DTC P1705 ACCELERATOR PEDAL POSITION (APP) SENSOR

PFP:22620

Description

ACS007T4

Accelerator pedal position sensor is part of the system that controls throttle position. This system also uses an electric throttle control actuator, which consists of a throttle control motor and throttle position sensors. Accelerator pedal position signal is sent to the ECM.

CONSULT-II Reference Value

ACS007ZB

Item name	Condition	Display value (Approx.)
THRTL POS SEN	When depressing accelerator pedal slowly after warming up engine. (Voltage rises gradually in response to throttle position.)	Fully-closed throttle: 0.8 V
		Fully-open throttle: 4.4 V

On Board Diagnosis Logic

ACS007T5

- This is an OBD-II self-diagnostic item.
- Diagnostic trouble code “THROTTLE POSI SEN” with CONSULT-II or 3rd judgement flicker without CONSULT-II is detected when TCM receives an excessively low or high voltage from the ECM.

Possible Cause

ACS007T6

Harness or connector
(The sensor circuit is open shorted.)

DTC Confirmation Procedure

ACS007T7

CAUTION:

- **Always drive vehicle at a safe speed.**
- **If performing this “DTC Confirmation Procedure” again, always turn ignition switch OFF and wait at least 10 seconds before continuing.**

After the repair, perform the following procedure to confirm that the malfunction is eliminated.

WITH CONSULT-II

1. Turn ignition switch ON and select “DATA MONITOR” mode for “A/T” with CONSULT-II.
2. Check the following.

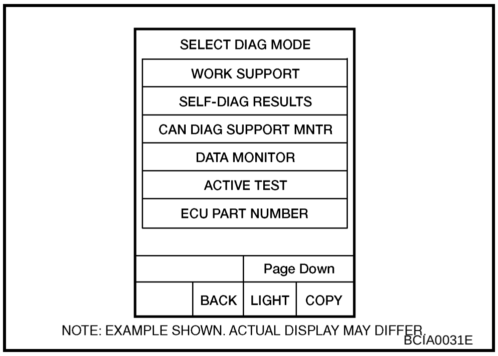

Accelerator pedal condition	THRTL POS SEN
Fully released	Approx. 0.8 V
Partially depressed	0.8 - 4.4 V
Fully depressed	Approx. 4.4 V

If the check result is NG, go to AT-170, "Diagnostic Procedure" .
If the check result is OK, go to following step.

3. Turn ignition switch ON and select “DATA MONITOR” mode for “A/T” with CONSULT-II.
4. Start engine and maintain the following conditions for at least 3 consecutive seconds. Then release accelerator pedal completely.
   VEHICLE SPEED: 10 km/h (6 MPH) or more
   THRTL POS SEN: Approximately 3 V or less
   SLCT LVR POSI: “D” position (OD ON)
   If the check result is NG, go to AT-170, "Diagnostic Procedure" .
   If the check result is OK, go to following step.
5. Maintain the following conditions for at least 3 consecutive seconds. Then release accelerator pedal completely.
   VEHICLE SPEED: 10 km/h (6 MPH) or more
   THRTL POS SEN: Wide open throttle
   SLCT LVR POSI: “D” position (OD ON)

WITH GST

Follow the procedure “WITH CONSULT-II”.

WITHOUT CONSULT-II

1. Start engine.
2. Drive vehicle under the following conditions for more than 3 seconds.
   Selector lever position: “D” position (OD ON)
   Vehicle speed: 10 km/h (6 MPH) or more
   Throttle position: greater than 4.0/8 of the full throttle position
3. Perform self-diagnosis. Refer to AT-89, "Diagnostic Procedure Without CONSULT-II" .
4. If the check result is NG, go to AT-170, "Diagnostic Procedure" .

Wiring Diagram — AT — TPS

ACS007T8

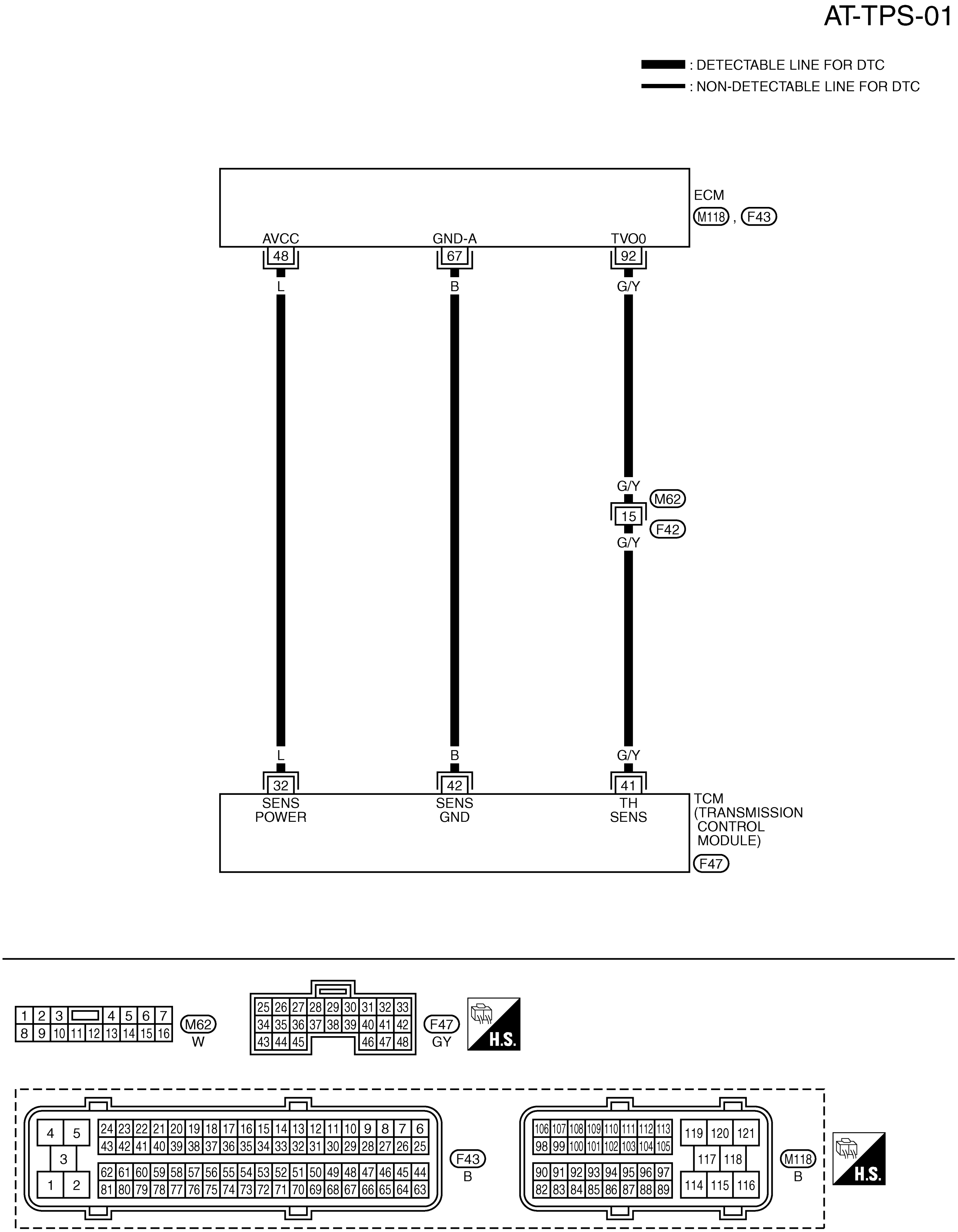

TCWB0010E

Data are reference value and are measured between each terminal and ground.

Terminal	Wire color	Item	Condition		Judgement standard (Approx.)
32	L	Sensor power	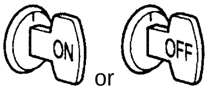	When turning ignition switch to “ON”.	4.5 - 5.5 V
				When turning ignition switch to “OFF”.	0 V
41	G/Y	Accelerator pedal position sensor	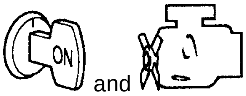	When depressing accelerator pedal slowly after warming up engine. (Voltage rises gradually in response to throttle position.)	Fully-closed throttle: 0.8 V Fully-open throttle: 4.4 V
42	B	Sensor ground	Always		0 V

Diagnostic Procedure

ACS007XB

1. CHECK DTC WITH ECM

Check DTC with CONSULT-II “ENGINE”.
Turn ignition switch ON and select “SELF DIAGNOSTIC RESULTS” mode for “ENGINE” with CONSULT-II. Refer to EC-112, "CONSULT-II Function (ENGINE)" .

OK or NG

OK >> GO TO 2.
NG >> Check accelerator pedal position sensor circuit for engine control. Refer to EC-553, "DTC P2122, P2123 APP SENSOR" , EC-560, "DTC P2127, P2128 APP SENSOR" and EC-576, "DTC P2138 APP SENSOR" . If CAN communication line is detected, Go to AT-93, "DTC U1000 CAN COMMUNICATION LINE" .

2. CHECK INPUT SIGNAL

With CONSULT-II

1. Turn ignition switch ON. (Do not start engine.)
2. Select “TCM INPUT SIGNALS” in “DATA MONITOR” mode for “A/T” with CONSULT-II.
3. Read out the value of “THRTL POS SEN”.

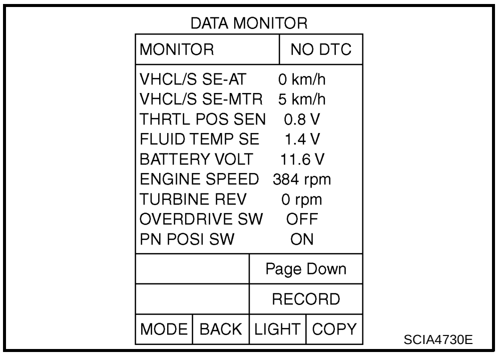

Item name	Condition	Display value (Approx.)
THRTL POS SEN	When depressing accelerator pedal slowly after warming up engine. (Voltage rises gradually in response to throttle position.)	Fully-closed throttle: 0.8 V
		Fully-open throttle: 4.4 V

Without CONSULT-II

1. Turn ignition switch ON. (Do not start engine.)
2. Check voltage between TCM connector terminals.

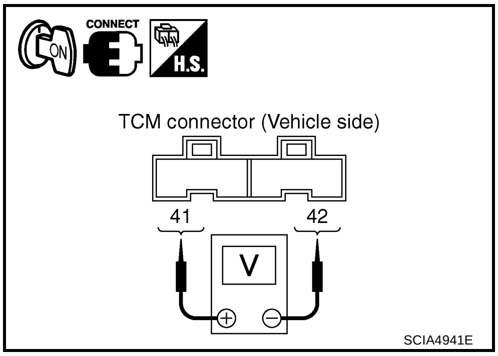

Item	Connector	Terminal	Condition	Judgement standard (Approx.)
Accelerator pedal position sensor	F47	41 - 42	When depressing accelerator pedal slowly after warming up engine. (Voltage rises gradually in response to throttle position.)	Fully-closed throttle: 0.8 V Fully-open throttle: 4.4 V

OK or NG

OK >> GO TO 3.
NG >> Check harness for short or open between ECM and TCM regarding throttle position sensor circuit.

3. CHECK DTC

Perform AT-167, "DTC Confirmation Procedure" .

OK or NG

OK >> **INSPECTION END**
NG >> GO TO 4.

4. CHECK TCM

1. Check TCM input/output signals. Refer to AT-76, "TCM Terminals and Reference Value" .
2. If NG, recheck TCM pin terminals for damage or loose connection with harness connector.

OK or NG

OK >> **INSPECTION END**
NG >> Repair or replace damaged parts.

DTC P1760 OVERRUN CLUTCH SOLENOID VALVE

PFP:31940

Description

ACS007TA

Overrun clutch solenoid valve is activated by TCM in response to signals sent from PNP switch, overdrive control switch, vehicle speed and ECM (throttle opening). Overrun clutch operation will then be controlled.

CONSULT-II Reference Value

ACS007ZC

Item name	Condition	Display value
OVERRUN/C S/V	When overrun clutch solenoid valve operates.	ON
	When overrun clutch solenoid valve does not operate.	OFF

On Board Diagnosis Logic

ACS007TB

- This is an OBD-II self-diagnostic item.
- Diagnostic trouble code “OVERRUN CLUTCH S/V” with CONSULT-II or 6th judgement flicker without CONSULT-II is detected when TCM detects an improper voltage drop when it tries to operate solenoid valve.

Possible Cause

ACS007TC

- Harness or connector
  (The solenoid circuit is open or shorted.)
- Overrun clutch solenoid valve

DTC Confirmation Procedure

ACS007TD

CAUTION:

- **Always drive vehicle at a safe speed.**
- **If performing this “DTC Confirmation Procedure” again, always turn ignition switch OFF and wait at least 10 seconds before continuing.**

TESTING CONDITION:
Always drive vehicle on a level road to improve accuracy of test.
After the repair, perform the following procedure to confirm that the malfunction is eliminated.

WITH CONSULT-II

1. Turn ignition switch ON and select “DATA MONITOR” mode for “A/T” with CONSULT-II.
2. Start engine.
3. Accelerate vehicle to a speed of more than 10 km/h (6 MPH) with “D” position (OD ON).
4. Release accelerator pedal completely with “D” position (OD OFF).
5. If the check result is NG, go to AT-174, "Diagnostic Procedure" .

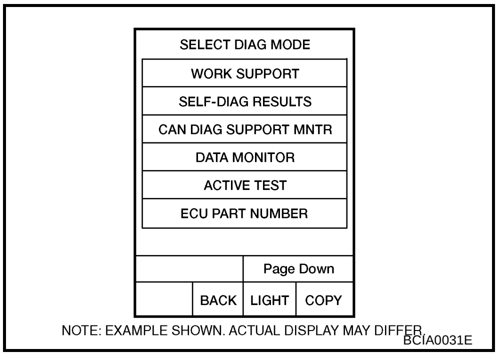

WITH GST

Follow the procedure “WITH CONSULT-II”.

WITHOUT CONSULT-II

1. Start engine.
2. Drive vehicle under the following conditions:
   Selector lever position: “D” position (OD ON)
   Vehicle speed: Higher than 10 km/h (6 MPH)
3. Perform self-diagnosis. Refer to AT-89, "Diagnostic Procedure Without CONSULT-II" .
4. If the check result is NG, go to AT-174, "Diagnostic Procedure" .

Wiring Diagram — AT — OVRCSV

ACS007TE

AT-OVRCSV-01

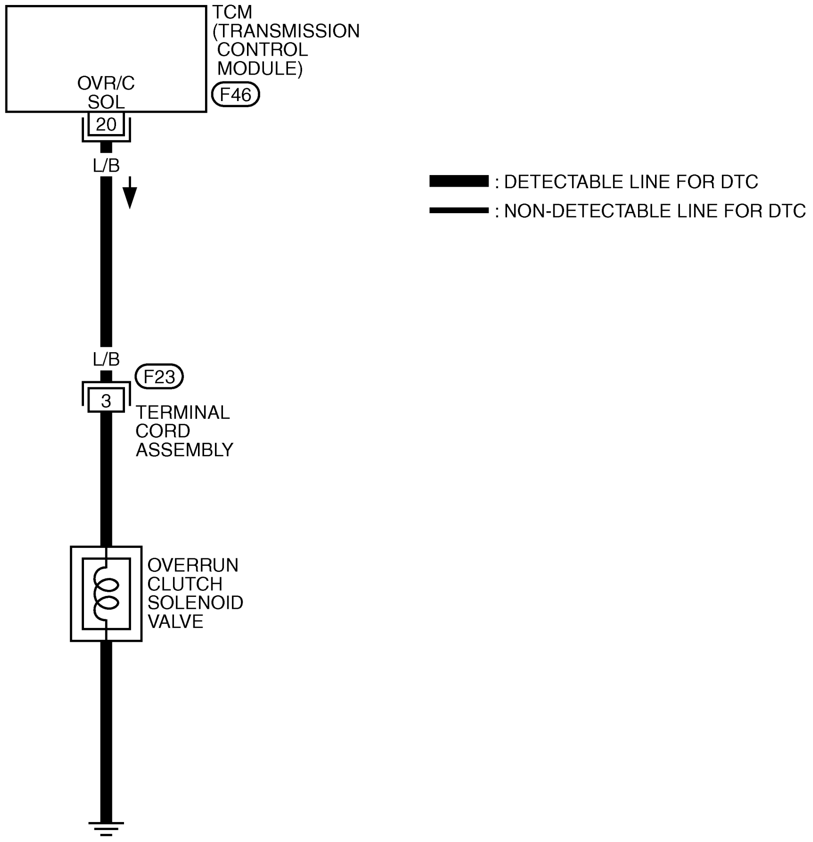

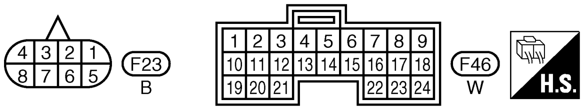

TCWA0042E

Data are reference value and are measured between each terminal and ground.

Terminal	Wire color	Item	Condition		Judgement standard (Approx.)
20	L/B	Overrun clutch solenoid valve		When overrun clutch solenoid valve operates.	Battery voltage
				When overrun clutch solenoid valve does not operate.	0 V

Diagnostic Procedure

ACS007TF

1. CHECK INPUT SIGNAL

With CONSULT-II

1. Start engine.
2. Select “MAIN SIGNALS” in “DATA MONITOR” mode for “A/T” with CONSULT-II.
3. Read out the value of “OVERRUN/C S/V” while driving.
   Check the value changes according to driving speed.

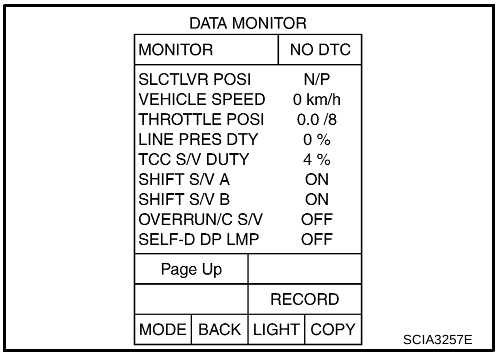

SCIA3257E

Item name	Condition	Display value
OVERRUN/C S/V	When overrun clutch solenoid valve operates.	ON
	When overrun clutch solenoid valve does not operate.	OFF

Without CONSULT-II

1. Start engine.
2. Check voltage between TCM connector terminal and ground.

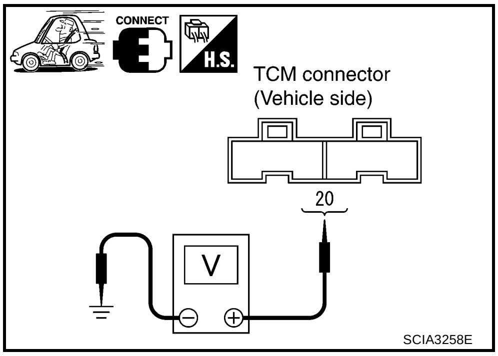

SCIA3258E

Item	Connector	Terminal	Condition	Judgement standard (Approx.)
Overrun clutch solenoid valve	F46	20 - Ground	When overrun clutch solenoid valve operates.	Battery voltage
			When overrun clutch solenoid valve does not operate.	0 V

OK or NG

OK >> GO TO 5.
NG >> GO TO 2.

2. CHECK OVERRUN CLUTCH SOLENOID VALVE CIRCUIT

1. Turn ignition switch OFF.
2. Disconnect TCM connector.
3. Check resistance between TCM connector terminal and ground.

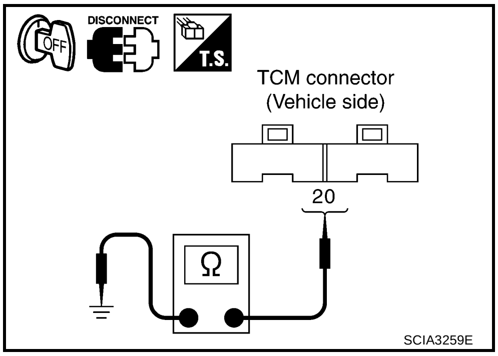

Solenoid valve	Connector	Terminal	Resistance (Approx.)
Overrun clutch solenoid valve	F46	20 - Ground	20 - 30 Ω

OK or NG

OK >> GO TO 5.
NG >> GO TO 3.

3. CHECK HARNESS BETWEEN TCM AND TERMINAL CORD ASSEMBLY HARNESS CONNECTOR

1. Turn ignition switch OFF.
2. Disconnect terminal cord assembly harness connector and TCM connector.
3. Check continuity between terminal cord assembly harness connector terminal and TCM connector terminal.

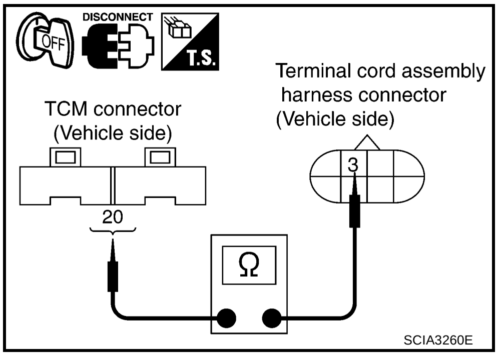

Item	Connector	Terminal	Continuity
TCM connector	F46	20	Yes
Terminal cord assembly harness connector	F23	3	

4. If OK, check harness for short to ground and short to power.
5. Reinstall any part removed.

OK or NG

OK >> GO TO 4.
NG >> Repair open circuit or short to ground or short to power in harness or connectors.

4. CHECK VALVE RESISTANCE

1. Turn ignition switch OFF.
2. Disconnect terminal cord assembly harness connector in engine room.
3. Check resistance between terminal cord assembly harness connector terminal and ground.

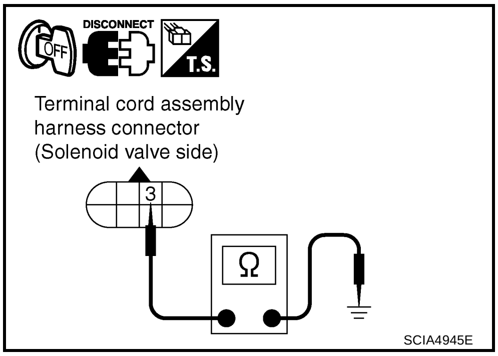

Solenoid valve	Connector	Terminal	Resistance (Approx.)
Overrun clutch solenoid valve	F23	3 - Ground	20 - 30 Ω

4. If OK, check continuity between ground and transaxle assembly.

OK or NG

OK >> GO TO 5.
NG >> Repair or replace damaged parts.

5. CHECK DTC

Perform AT-172, "DTC Confirmation Procedure" .

OK or NG

OK >> **INSPECTION END**
NG >> GO TO 6.

6. CHECK TCM

1. Check TCM input/output signals. Refer to AT-76, "TCM Terminals and Reference Value" .
2. If NG, recheck TCM pin terminals for damage or loose connection with harness connector.

OK or NG

OK >> **INSPECTION END**
NG >> Repair or replace damaged parts.

Component Inspection

ACS007TG

OVERRUN CLUTCH SOLENOID VALVE

- For removal, refer to AT-251, "Control Valve Assembly and Accumulators" .

Resistance

- Check resistance between terminal and ground.

Solenoid valve	Terminal		Resistance (Approx.)
Overrun clutch solenoid valve	3	Ground	20 - 30 Ω

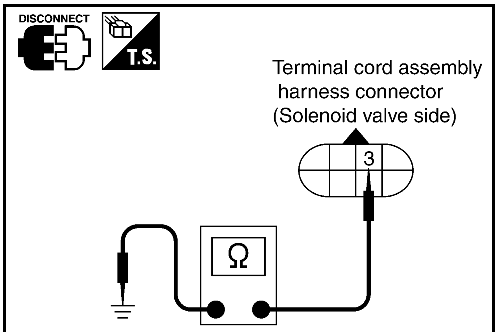

SCIA2059E

Operation

- Check solenoid valve by listening for its operating sound while applying battery voltage to the terminal and ground.

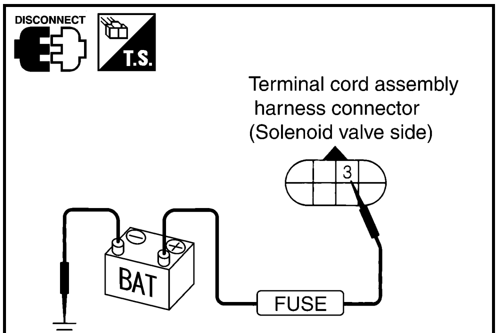

SCIA2062E

DTC VEHICLE SPEED SENSOR MTR

PFP:24814

Description

ACS007TH

Vehicle speed sensor·MTR is built into speedometer assembly. The sensor functions is an auxiliary device to the revolution sensor when it is malfunctioning. TCM will then use a signal sent from vehicle speed sensor·MTR.

CONSULT-II Reference Value

ACS007ZD

Item name	Condition	Display value
VHCL/S SE-MTR	During driving	Approximately matches the speedometer reading.

On Board Diagnosis Logic

ACS007TI

- This is not an OBD-II self-diagnostic item.
- Diagnostic trouble code “VHCL SPEED SEN-MTR” with CONSULT-II or 2nd judgement flicker without CONSULT-II is detected when TCM does not receive the proper voltage signal from the sensor.

Possible Cause

ACS007TJ

- Harness or connector
  (The sensor circuit is open or shorted.)
- Vehicle speed sensor

DTC Confirmation Procedure

ACS007TK

CAUTION:

- **Always drive vehicle at a safe speed.**
- **If performing this “DTC Confirmation Procedure” again, always turn ignition switch OFF and wait at least 10 seconds before continuing.**

After the repair, perform the following procedure to confirm that the malfunction is eliminated.

WITH CONSULT-II

1. Turn ignition switch ON and select “DATA MONITOR” mode for “A/T” with CONSULT-II.
2. Start engine and accelerate vehicle from 0 to 25 km/h (0 to 16 MPH).
3. If the check result is NG, go to AT-179, "Diagnostic Procedure" .

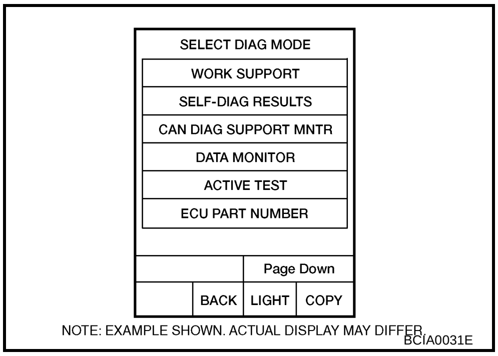

WITH GST

Follow the procedure “WITH CONSULT-II”

WITHOUT CONSULT-II

1. Start engine.
2. Drive vehicle under the following conditions:
   Selector lever position: “D” position
   Vehicle speed: Higher than 25 km/h (16 MPH).
3. Perform self-diagnosis. Refer to AT-89, "Diagnostic Procedure Without CONSULT-II" .
4. If the check result is NG, go to AT-179, "Diagnostic Procedure" .

Wiring Diagram — AT — VSSMTR

ACS007TL

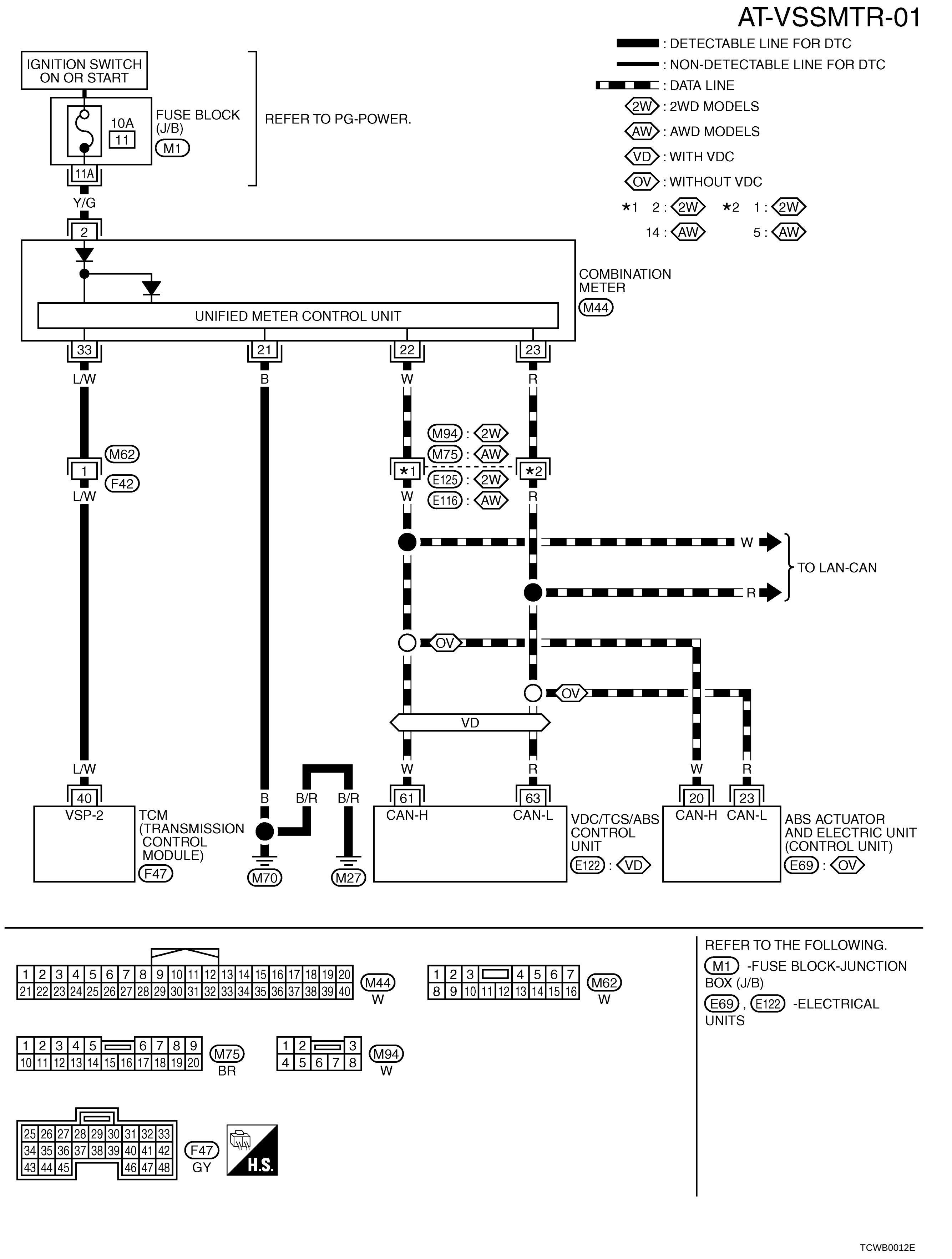

Data are reference value and are measured between each terminal and ground.

Terminal	Wire color	Item	Condition		Judgement standard (Approx.)
40	L/W	Vehicle speed sensor		When moving vehicle at 2 to 3 km/h (1 to 2 MPH) for 1 m (3 ft) or more.	Voltage varies between less than 0 V and more than 4.5 V

Diagnostic Procedure

ACS007TM

1. CHECK INPUT SIGNAL

With CONSULT-II

1. Start engine.
2. Select “TCM INPUT SIGNALS” in “DATA MONITOR” mode for “A/T” with CONSULT-II.
3. Read out the value of “VHCL/S SE-MTR” while driving.
   Check the value changes according to driving speed.

Item name	Condition	Display value
VHCL/S SE-MTR	During driving	Approximately matches the speedometer reading.

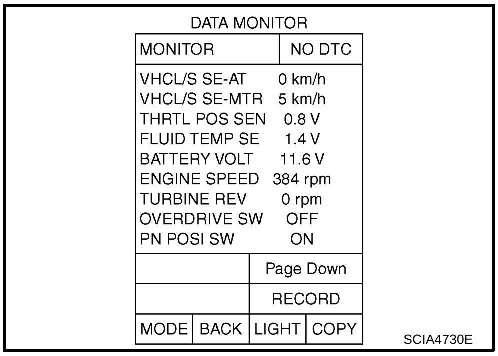

SCIA4730E

Without CONSULT-II

1. Start engine.
2. Check voltage between TCM connector terminal and ground.

Item	Connector	Terminal	Condition	Judgement standard (Approx.)
Vehicle speed sensor	F47	40 - Ground	When moving vehicle at 2 to 3 km/h (1 to 2 MPH) for 1 m (3 ft) or more.	Voltage varies between less than 0 V and more than 4.5 V

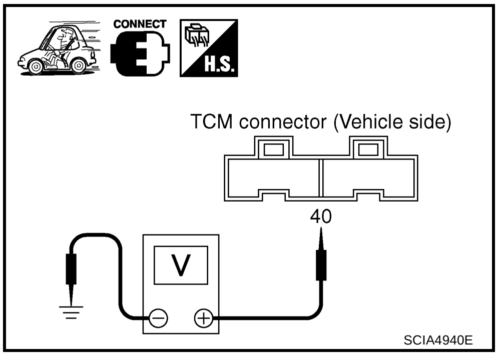

SCIA4940E

OK or NG

OK >> GO TO 3.
NG >> GO TO 2.

2. DETECT MALFUNCTIONING ITEM

Check the following.

- Combination meter. Refer to DI-4, "COMBINATION METERS" .
- Harness for short or open between TCM and combination meter.

OK or NG

OK >> GO TO 3.
NG >> Repair or replace damaged parts.

3. CHECK DTC

Perform AT-177, "DTC Confirmation Procedure" .

OK or NG

OK >> **INSPECTION END**
NG >> GO TO 4.

4. CHECK TCM

1. Check TCM input/output signals. Refer to AT-76, "TCM Terminals and Reference Value" .
2. If NG, recheck TCM pin terminals for damage or loose connection with harness connector.

OK or NG

OK >> **INSPECTION END**
NG >> Repair or replace damaged parts.

DTC BATT/FLUID TEMP SEN (A/T FLUID TEMP SENSOR CIRCUIT AND TCM POWER SOURCE)

PFP:31940

Description

ACS007TN

A/T fluid temperature sensor detects the A/T fluid temperature and sends a signal to TCM.

CONSULT-II Reference Value

ACS007ZE

Item name	Condition	Display value (Approx.)
FLUID TEMP SE	When ATF temperature is 20°C (68°F).	1.5 V
	When ATF temperature is 80°C (176°F).	0.5 V

On Board Diagnosis Logic

ACS007TO

- This is not an OBD-II self-diagnostic item.
- Diagnostic trouble code “BATT/FLUID TEMP SEN” with CONSULT-II or 8th judgement flicker without CONSULT-II is detected when TCM receives an excessively low or high voltage from the sensor.

Possible Cause

ACS008QL

- Harness or connector (Sensor circuit is open or shorted.)
- A/T fluid temperature sensor

DTC Confirmation Procedure

ACS007TP

CAUTION:

- **Always drive vehicle at a safe speed.**
- **If performing this “DTC Confirmation Procedure” again, always turn ignition switch OFF and wait at least 10 seconds before continuing.**

After the repair, perform the following procedure to confirm that the malfunction is eliminated.

WITH CONSULT-II

1. Start engine.
2. Select “DATA MONITOR” mode for “A/T” with CONSULT-II.
3. Drive vehicle under the following conditions.
   SLCT LVR POSI: “D” position (OD ON)
   VEHICLE SPEED: Higher than 20 km/h (12 MPH)
4. If the check result is NG, go to AT-183, "Diagnostic Procedure" .

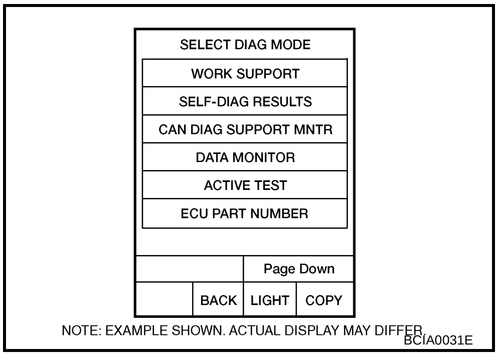

WITH GST

Follow the procedure “WITH CONSULT-II”.

WITHOUT CONSULT-II

1. Start engine.
2. Drive vehicle under the following conditions.
   Selector lever position: “D” position (OD ON)
   Vehicle speed: Higher than 20 km/h (12 MPH)
3. Perform self-diagnosis. Refer to AT-89, "Diagnostic Procedure Without CONSULT-II" .
4. If the check result is NG, go to AT-183, "Diagnostic Procedure" .

Wiring Diagram — AT — BA/FTS

ACS007TQ

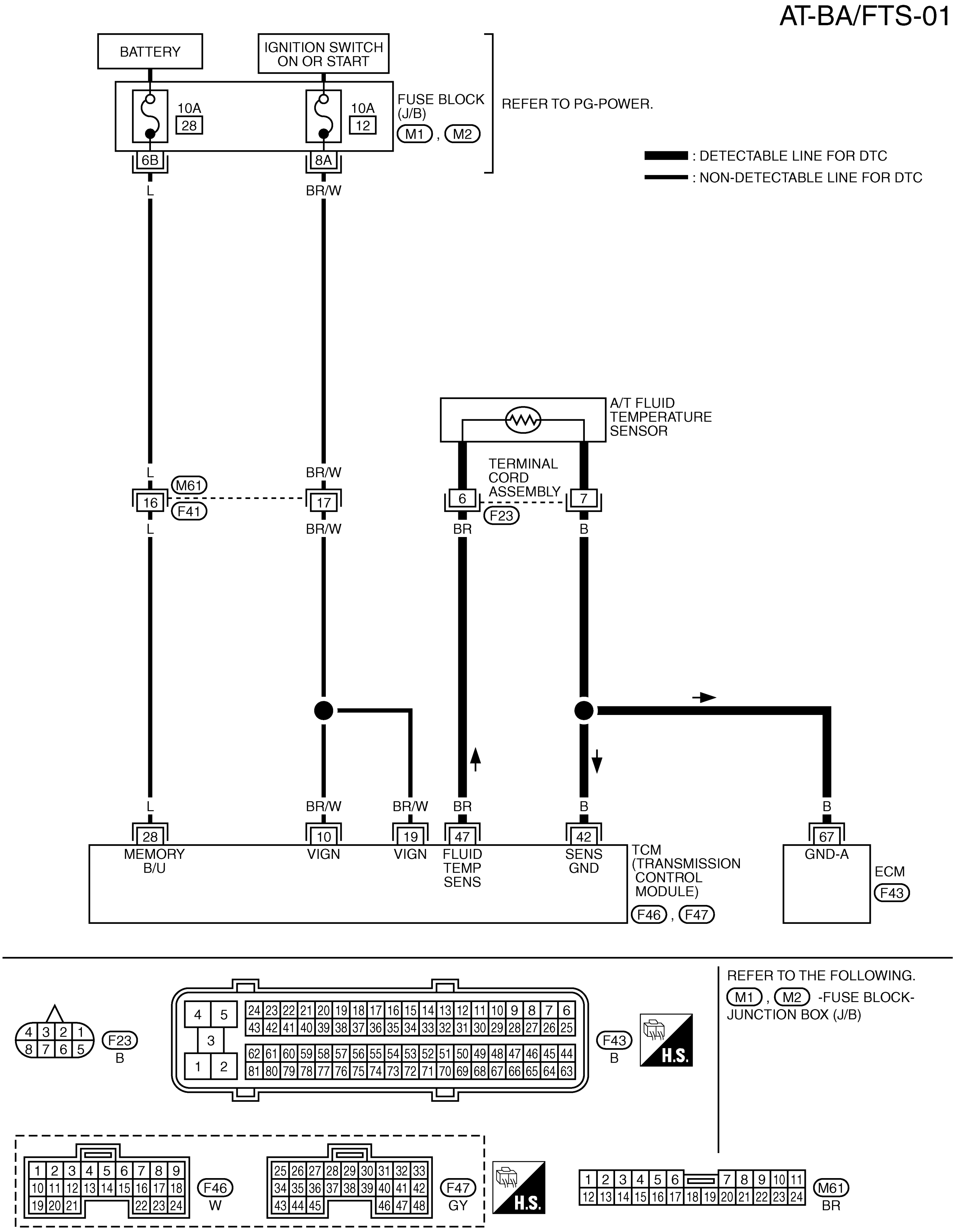

TCWB0011E

Data are reference value and are measured between each terminal and ground.

Terminal	Wire color	Item	Condition		Judgement standard (Approx.)
10	BR/W	Power source	or 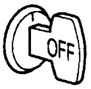	When turning ignition switch ON.	Battery voltage
				When turning ignition switch OFF.	0 V
19	BR/W	Power source		Same as No. 10	
28	L	Power source (Memory back-up)	Always		Battery voltage
42	B	Sensor ground	Always		0 V
47	BR	A/T fluid temperature sensor		When ATF temperature is 20°C (68°F).	1.5 V
				When ATF temperature is 80°C (176°F).	0.5 V

Diagnostic Procedure

ACS007TR

1. CHECK TCM POWER SOURCE

1. Turn ignition switch ON. (Do not start engine.)
2. Check voltage between TCM connector terminals and ground.

Item	Connector	Terminal	Judgement standard (Approx.)
Power source	F46	10	Battery voltage
		19	
Power source (Memory back-up)	F47	28	

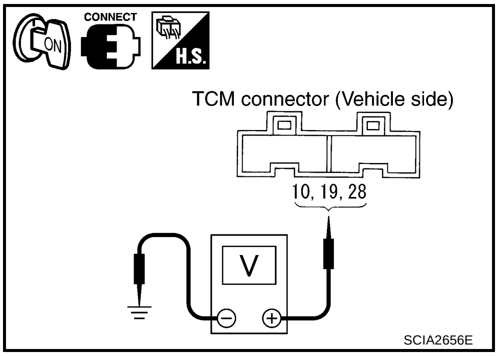

3. Turn ignition switch OFF.
4. Check voltage between TCM connector terminals and ground.

Item	Connector	Terminal	Judgement standard (Approx.)
Power source	F46	10	0 V
		19	0 V
Power source (Memory back-up)	F47	28	Battery voltage

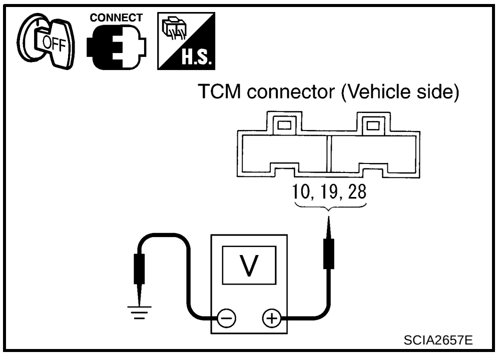

OK or NG

OK >> GO TO 3.
NG >> GO TO 2.

2. DETECT MALFUNCTIONING ITEM

Check the following.

- Harness for short or open between ignition switch and TCM connector terminals 10, 19.
- Harness for short or open between battery and TCM connector terminal 28.
- 10 A fuse (No.12, No.28, located in the fuse block)
- Ignition switch. Refer to PG-2, "POWER SUPPLY ROUTING" .

OK or NG

OK >> GO TO 9.
NG >> Repair or replace damaged parts.

3. CHECK INPUT SIGNAL OF A/T FLUID TEMPERATURE SENSOR

With CONSULT-II

1. Start engine.
2. Select “TCM INPUT SIGNALS” in “DATA MONITOR” mode for “A/T” with CONSULT-II.
3. Read out the value of “FLUID TEMP SE”.

Item name	Condition	Display value (Approx.)
FLUID TEMP SE	When ATF temperature is 20°C (68°F).	1.5 V
	When ATF temperature is 80°C (176°F).	0.5 V

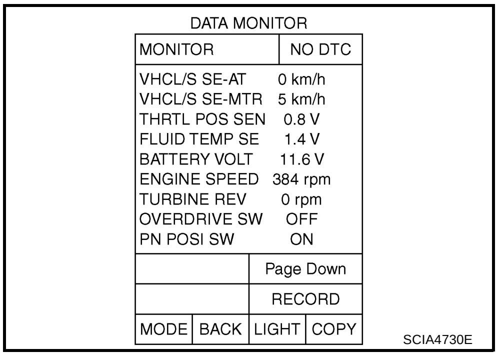

SCIA4730E

Without CONSULT-II

1. Start engine.
2. Check voltage TCM connector terminals while warming up A/T.

Item	Connector	Terminal	Condition	Judgement standard (Approx.)
A/T fluid temperature sensor	F47	47 - 42	When ATF temperature is 20°C (68°F).	1.5 V
			When ATF temperature is 80°C (176°F).	0.5 V

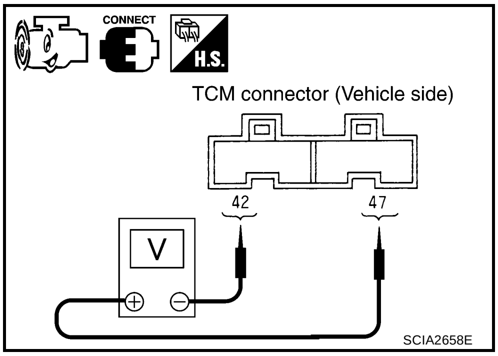

SCIA2658E

OK or NG

OK >> GO TO 9.
NG >> GO TO 4.

4. DETECT MALFUNCTIONING ITEM

Check the following.

- Harness for short or open between TCM, ECM and terminal cord assembly harness connector
- Ground circuit for ECM, Refer to PG-2, "POWER SUPPLY ROUTING" .

OK or NG

OK >> GO TO 5.
NG >> Repair or replace damaged parts.

5. CHECK FLUID TEMPERATURE SENSOR CIRCUIT

1. Turn ignition switch OFF.
2. Disconnect TCM connector.
3. Check resistance between TCM connector terminals.

Item	Connector	Terminal	Tempera-ture °C (°F)	Resistance (Approx.)
A/T fluid temperature sensor	F47	47 - 42	20 (68)	2.5 kΩ
			80 (176)	0.3 kΩ

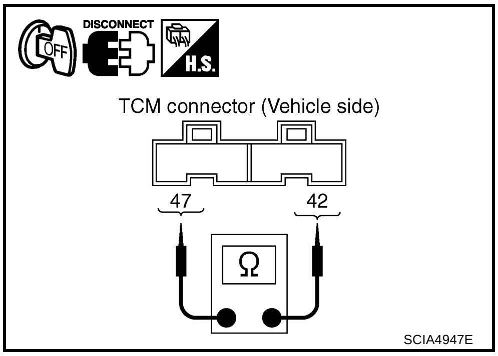

SCIA4947E

OK or NG

OK >> GO TO 9.
NG >> GO TO 6.

6. CHECK HARNESS BETWEEN TCM AND TERMINAL CORD ASSEMBLY HARNESS CONNECTOR

1. Turn ignition switch OFF.
2. Disconnect terminal cord assembly harness connector and TCM connector.
3. Check continuity between terminal cord assembly harness connector terminals and TCM connector terminals.

Item	Connector	Terminal	Continuity
TCM connector	F47	42	Yes
Terminal cord assembly harness connector	F23	7	
TCM connector	F47	47	Yes
Terminal cord assembly harness connector	F23	6	

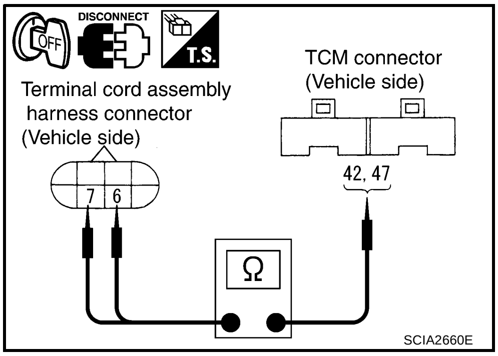

SCIA2660E

4. If OK, check harness for short to ground and short to power.
5. Reinstall any part removed.

OK or NG

OK >> GO TO 7.
NG >> Repair open circuit or short to ground or short to power in harness or connectors.

7. CHECK A/T FLUID TEMPERATURE SENSOR WITH TERMINAL CORD ASSEMBLY

1. Turn ignition switch OFF.
2. Disconnect terminal cord assembly harness connector in engine room.
3. Check resistance between terminal cord assembly harness terminals.

Temperature °C (°F)	Resistance (Approx.)
20 (68)	2.5 kΩ
80 (176)	0.3 kΩ

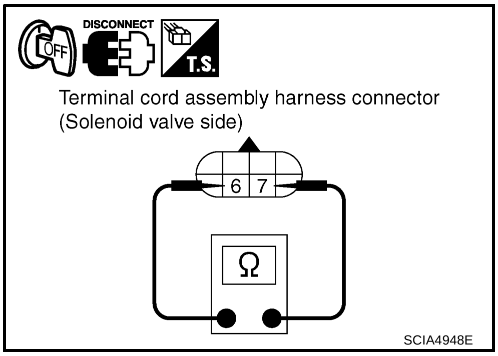

SCIA4948E

4. Reinstall any part removed.

OK or NG

OK >> GO TO 8.
NG >> Repair or replace damaged parts.

8. DETECT MALFUNCTIONING ITEM

1. Remove oil pan. Refer to AT-251, "Control Valve Assembly and Accumulators" .
2. Check the following.

– A/T fluid temperature sensor

- Check resistance between terminal cord assembly harness terminals while changing temperature as shown.

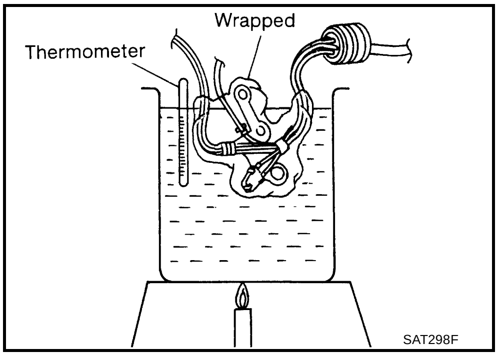

Temperature °C (°F)	Resistance (Approx.)
20 (68)	2.5 kΩ
80 (176)	0.3 kΩ

– Harness of terminal cord assembly for short or open

OK or NG

OK >> GO TO 9.
NG >> Repair or replace damaged parts.

9. CHECK DTC

Perform AT-181, "DTC Confirmation Procedure" .

OK or NG

OK >> **INSPECTION END**
NG >> GO TO 10.

10. CHECK TCM

1. Check TCM input/output signals. Refer to AT-76, "TCM Terminals and Reference Value" .
2. If NG, recheck TCM pin terminals for damage or loose connection with harness connector.

OK or NG

OK >> **INSPECTION END**
NG >> Repair or replace damaged parts.

Component Inspection

ACS007TS

A/T FLUID TEMPERATURE SENSOR

- For removal, refer to AT-251, "Control Valve Assembly and Accumulators" .
- Check resistance between two terminals while changing temperature as shown at left.

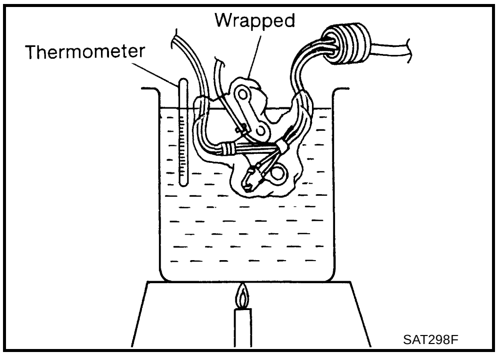

Temperature °C (°F)	Resistance (Approx.)
20 (68)	2.5 kΩ
80 (176)	0.3 kΩ

MAIN POWER SUPPLY AND GROUND CIRCUIT

PFP:00100

Description

ACS007TT

When the power supply to TCM is cut off, for example because battery is removed, and the self-diagnostics memory function stops, malfunction is detected.

On Board Diagnosis Logic

ACS007TU

- This is not an OBD-II self-diagnostic item.
- Diagnostic trouble code “INITIAL START” with CONSULT-II is detected when TCM dose not receive the voltage signal from the battery power supply.
- This is not a malfunction message. (Whenever shutting off a power supply to TCM, this message appears on the screen.)

Possible Cause

ACS007TV

Harness or connector
(Battery or ignition switch and TCM circuit is open or shorted.)

DTC Confirmation Procedure

ACS007TW

CAUTION:
If performing this “DTC Confirmation Procedure” again, always turn ignition switch OFF and wait at least 10 seconds before continuing.

WITH CONSULT-II

1. Turn ignition switch ON. (Do not start engine.)
2. Select “DATA MONITOR” mode for “A/T” with CONSULT-II.
3. Wait for at least 2 consecutive seconds.
4. If DTC is detected, go to AT-189, "Diagnostic Procedure" .

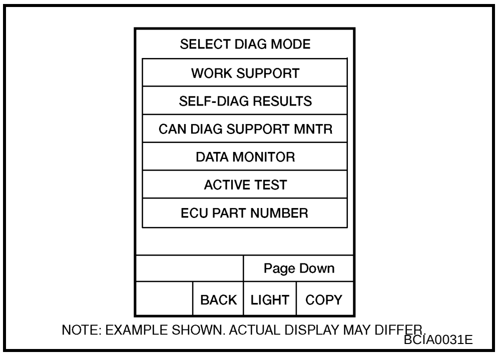

Wiring Diagram — AT — MAIN

ACS007TX

AT-MAIN-01

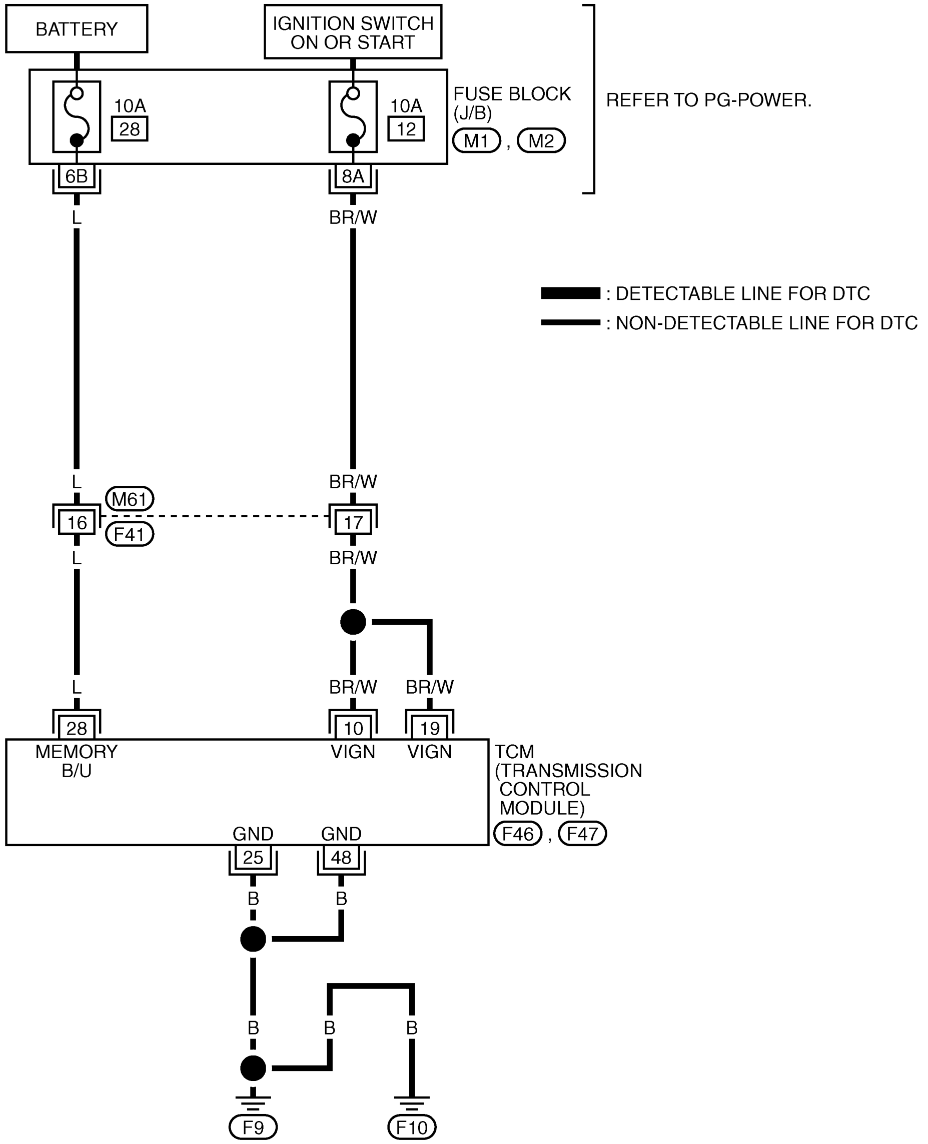

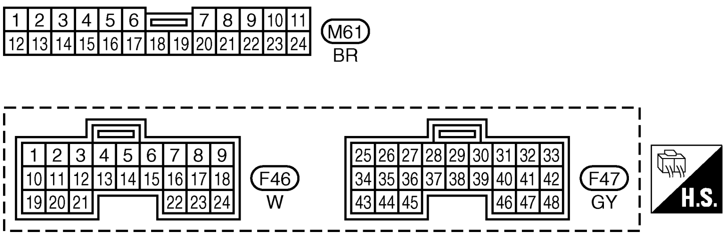

REFER TO THE FOLLOWING.
M1 , M2 -FUSE BLOCK-JUNCTION BOX (J/B)

TCWA0240E

Data are reference value and are measured between each terminal and ground.

Terminal	Wire color	Item	Condition		Judgement standard (Approx.)
10	BR/W	Power source	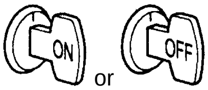	When turning ignition switch ON.	Battery voltage
				When turning ignition switch OFF.	0 V
19	BR/W	Power source		Same as No. 10	
25	B	Ground	Always		0 V
28	L	Power source (Memory back-up)	Always		Battery voltage
48	B	Ground	Always		0 V

Diagnostic Procedure

ACS007TY

1. CHECK TCM POWER SOURCE

1. Turn ignition switch ON. (Do not start engine.)
2. Check voltage between TCM connector terminals and ground.

Item	Connector	Terminal	Judgement standard (Approx.)
Power source	F46	10	Battery voltage
		19	
Power source (Memory back- up)	F47	28	

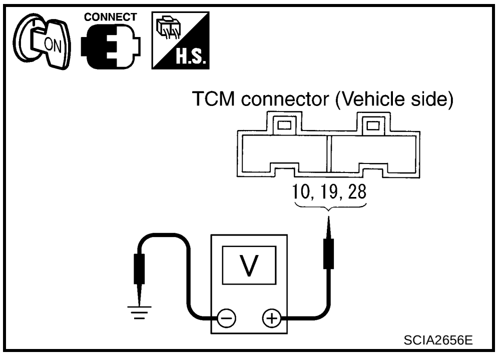

SCIA2656E

3. Turn ignition switch OFF.
4. Check voltage between TCM connector terminals and ground.

Item	Connector	Terminal	Judgement standard (Approx.)
Power source	F46	10	0 V
		19	0 V
Power source (Memory back- up)	F47	28	Battery voltage

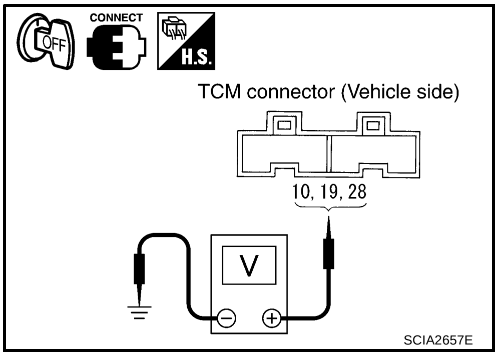

SCIA2657E

OK or NG

OK >> GO TO 3.
NG >> GO TO 2.

2. DETECT MALFUNCTIONING ITEM

Check the following.

- Harness for short or open between ignition switch and TCM connector terminals 10, 19
- Harness for short or open between battery and TCM connector terminal 28
- 10 A fuse (No.12, No.28, located in the fuse block)
- Ignition switch. Refer to PG-2, "POWER SUPPLY ROUTING" .

OK or NG

OK >> GO TO 3.
NG >> Repair or replace damaged parts.

3. CHECK TCM GROUND CIRCUIT

1. Turn ignition switch OFF.
2. Disconnect TCM connector.
3. Check continuity between TCM connector terminals and ground.

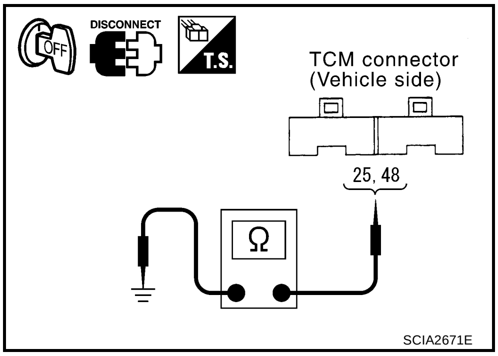

Item	Connector	Terminal	Continuity
Ground	F47	25, 48 - Ground	Yes

OK or NG

OK >> GO TO 4.
NG >> Repair open circuit or short to ground or short to power in harness or connectors.

4. CHECK DTC

Perform AT-187, "DTC Confirmation Procedure" .

OK or NG

OK >> **INSPECTION END**
NG >> GO TO 5.

5. CHECK TCM

1. Check TCM input/output signals. Refer to AT-76, "TCM Terminals and Reference Value" .
2. If NG, recheck TCM pin terminals for damage or loose connection with harness connector.

OK or NG

OK >> **INSPECTION END**
NG >> Repair or replace damaged parts.

DTC CONTROL UNIT (RAM), CONTROL UNIT (ROM)

PFP:31036

Description

ACS007TZ

TCM consists of a microcomputer and connectors for signal input and output and for power supply. The unit controls A/T.

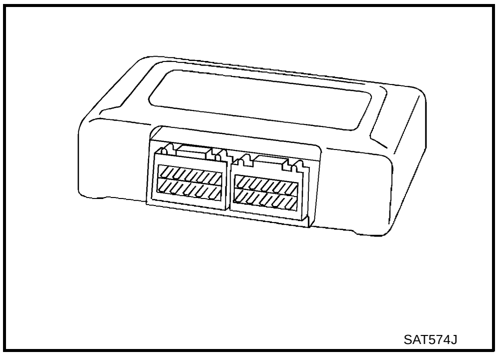

SAT574J

On Board Diagnosis Logic

ACS007U0

- This is not an OBD-II self-diagnostic item.
- Diagnostic trouble code “CONTROL UNIT(RAM)”, “CONTROL UNIT(ROM)” with CONSULT-II is detected when TCM memory (RAM) or (ROM) is malfunctioning.

Possible Cause

ACS007U1

TCM

DTC Confirmation Procedure

ACS007U2

CAUTION:

If performing this “DTC Confirmation Procedure” again, always turn ignition switch OFF and wait at least 10 seconds before continuing.

WITH CONSULT-II

1. Turn ignition switch ON and select “DATA MONITOR” mode for A/T with CONSULT-II.
2. Start engine.
3. Run engine for at least 2 seconds at idle speed.
4. If the check result is NG, go to AT-191, "Diagnostic Procedure" .

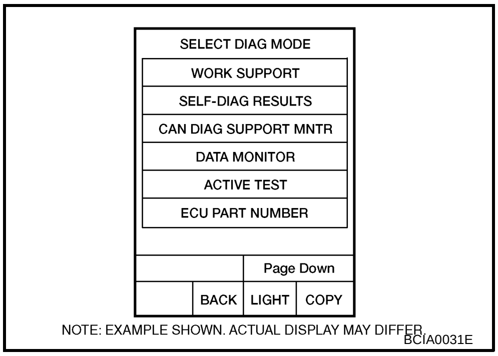

NOTE: EXAMPLE SHOWN. ACTUAL DISPLAY MAY DIFFER.

BCIA0031E

Diagnostic Procedure

ACS007U3

1. CHECK DTC

With CONSULT-II

1. Turn ignition switch ON and select “SELF-DIAG RESULTS” mode for A/T with CONSULT-II.
2. Touch “ERASE”.
3. Perform AT-191, "DTC Confirmation Procedure" .

Is the “CONTROL UNIT(RAM)” or “CONTROL UNIT(ROM)” displayed again?

YES >> Replace TCM.
NO >> **INSPECTION END**

DTC CONTROL UNIT(EEPROM)

PFP:31036

Description

ACS007U4

TCM consists of a microcomputer and connectors for signal input and output and for power supply. The unit controls A/T.

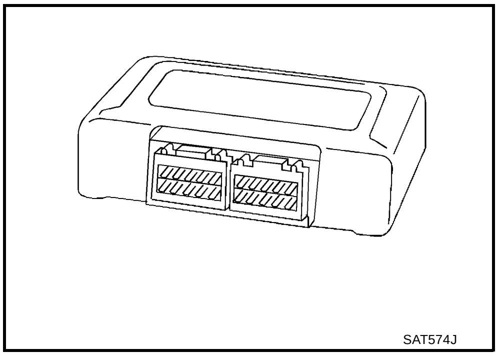

On Board Diagnosis Logic

ACS007U5

- This is not an OBD-II self-diagnostic item.
- Diagnostic trouble code “CONT UNIT(EEPROM)” with CONSULT-II is detected when TCM memory (EEP ROM) is malfunctioning.

Possible Cause

ACS007U6

TCM

DTC Confirmation Procedure

ACS007U7

CAUTION:

If performing this “DTC Confirmation Procedure” again, always turn ignition switch OFF and wait at least 10 seconds before continuing.

WITH CONSULT-II

1. Turn ignition switch ON and select “DATA MONITOR” mode for A/T with CONSULT-II.
2. Start engine.
3. Run engine for at least 2 seconds at idle speed.
4. If the check result is NG, go to AT-192, "Diagnostic Procedure" .

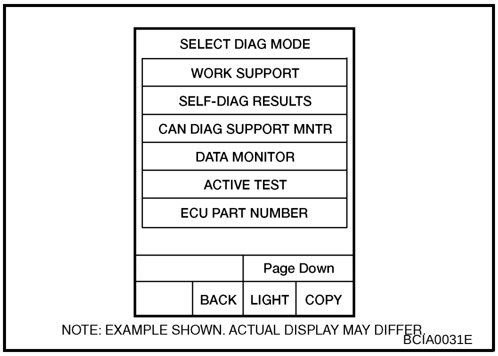

Diagnostic Procedure

ACS007U8

1. CHECK DTC

With CONSULT-II

1. Turn ignition switch ON and select “SELF-DIAG RESULTS” mode for A/T with CONSULT-II.
2. Move selector lever to “R” position.
3. Depress accelerator pedal (Full throttle position).
4. Touch “ERASE”.
5. Turn ignition switch OFF for 10 seconds.

Perform AT-192, "DTC Confirmation Procedure" .
See previous page.

Is the “CONT UNIT(EEPROM)” displayed again?

YES >> Replace TCM.
NO >> **INSPECTION END**

TROUBLE DIAGNOSES FOR SYMPTOMS

PFP:00100

Wiring Diagram — AT — NONDTC

ACS007U9

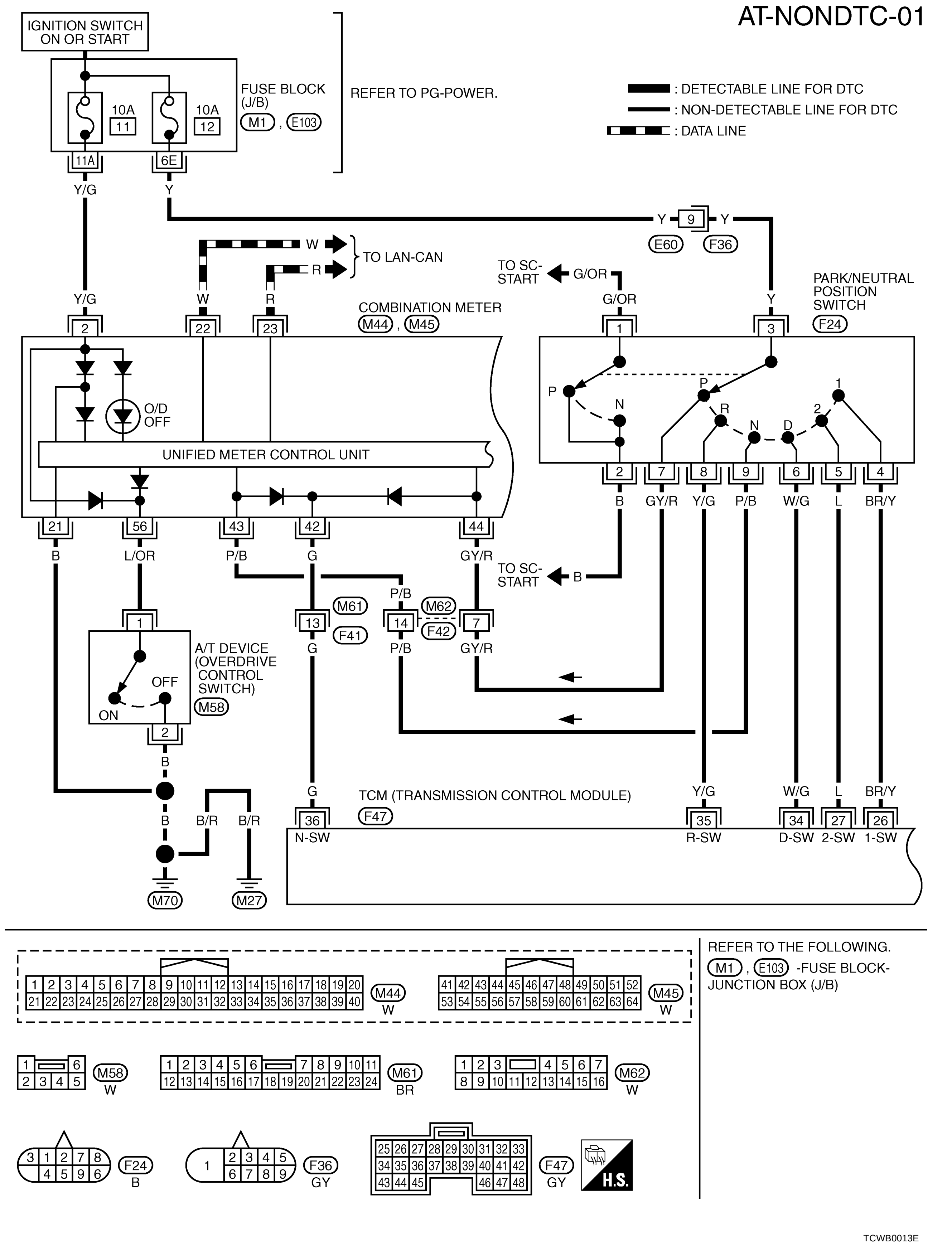

AT-NONDTC-02

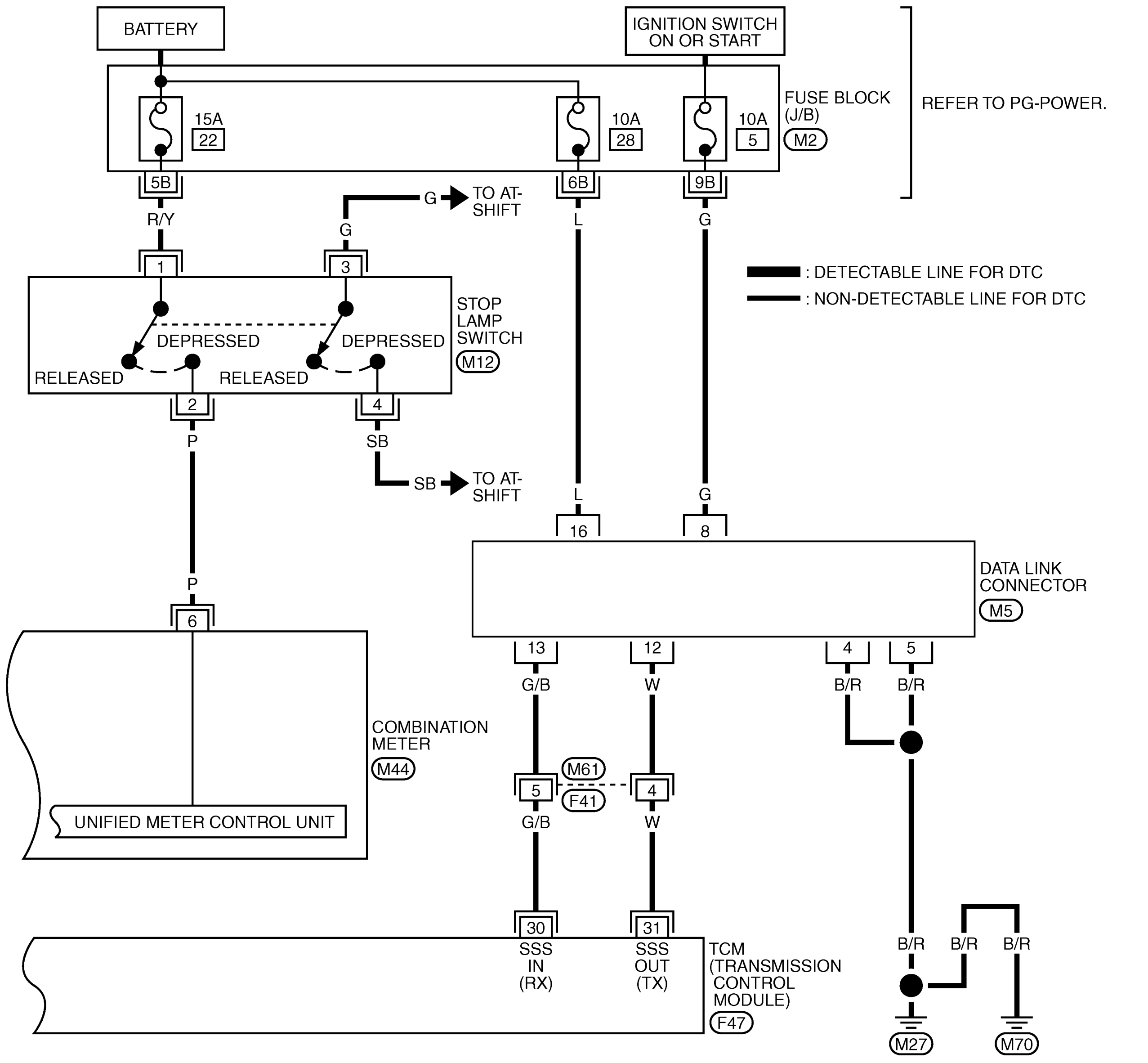

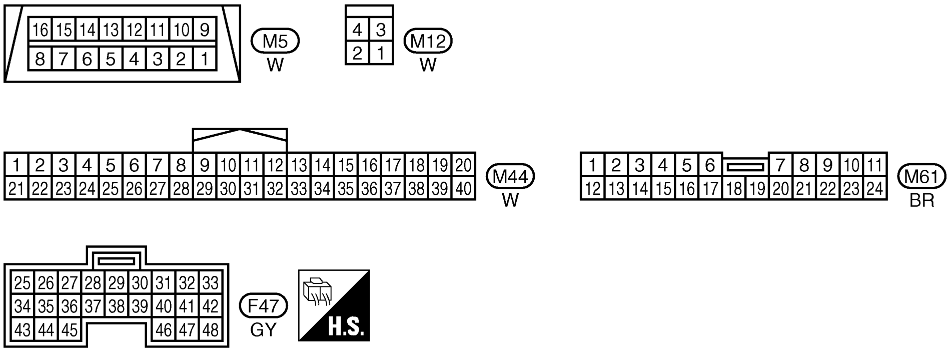

REFER TO THE FOLLOWING.
(M2) -FUSE BLOCK-JUNCTION BOX (J/B)

TCWB0014E

Data are reference value and are measured between each terminal and ground.

Terminal	Wire color	Item	Condition		Judgement standard (Approx.)
26	BR/Y	PNP switch “1” position	and 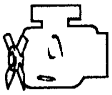	When setting selector lever to “1” position.	Battery voltage
				When setting selector lever to other positions.	0 V
27	L	PNP switch “2” position		When setting selector lever to “2” position.	Battery voltage
				When setting selector lever to other positions.	0 V
30	G/B	CONSULT- II (RX)	—		—
31	W	CONSULT- II (TX)	—		—
34	W/G	PNP switch “D” position	and 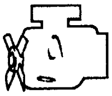	When setting selector lever to “D” position.	Battery voltage
				When setting selector lever to other positions.	0 V
35	Y/G	PNP switch “R” position		When setting selector lever to “R” position.	Battery voltage
				When setting selector lever to other positions.	0 V
36	G	PNP switch “N” or “P” position		When setting selector lever to “N” or “P” position.	Battery voltage
				When setting selector lever to other positions.	0 V

OD OFF Indicator Lamp Does Not Come On

ACS007UA

SYMPTOM:

OD OFF indicator lamp does not come on for about 2 seconds when turning ignition switch ON.

1. CHECK CAN COMMUNICATION LINE

Perform self-diagnosis. Refer to AT-81, "SELF-DIAGNOSTIC RESULT MODE" .

Is a malfunction in CAN communication indicated in the results?

YES >> Check CAN communication line. Refer to AT-93, "DTC U1000 CAN COMMUNICATION LINE" .
NO >> GO TO 2.

2. CHECK TCM POWER SOURCE

1. Turn ignition switch ON. (Do not start engine.)
2. Check voltage between TCM connector terminals and ground. Refer to AT-188, "Wiring Diagram — AT — MAIN" .

Item	Connector	Terminal	Judgement standard (Approx.)
Power source	F46	10	Battery voltage
		19	
Power source (Memory back-up)	F47	28	

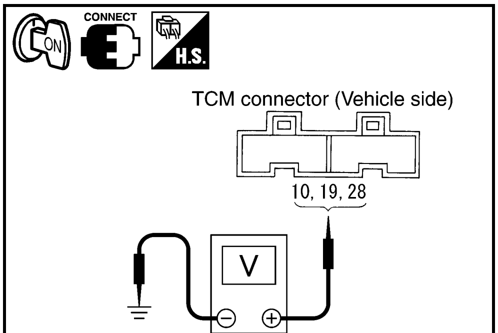

SCIA2656E

3. Turn ignition switch OFF.
4. Check voltage between TCM connector terminals and ground.

Item	Connector	Terminal	Judgement standard (Approx.)
Power source	F46	10	0 V
		19	0 V
Power source (Memory back-up)	F47	28	Battery voltage

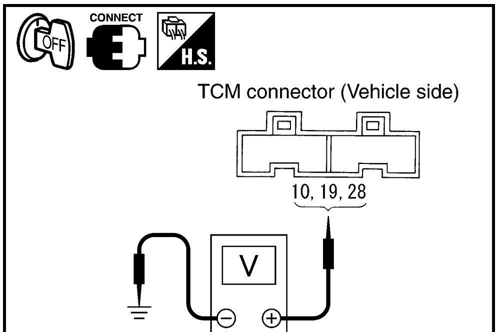

SCIA2657E

OK or NG

OK >> GO TO 4.
NG >> GO TO 3.

3. DETECT MALFUNCTIONING ITEM

Check the following.

- Harness for short or open between ignition switch and TCM connector terminals 10, 19
- Harness for short or open between battery and TCM connector terminal 28
- 10 A fuse (No.12, No. 28, located in the fuse block)
- Ignition switch. Refer to PG-2, "POWER SUPPLY ROUTING" .

OK or NG

OK >> GO TO 4.
NG >> Repair or replace damaged parts.

4. CHECK TCM GROUND CIRCUIT

1. Turn ignition switch OFF.
2. Disconnect TCM connector.
3. Check continuity between TCM connector terminals and ground. Refer to AT-188, "Wiring Diagram — AT — MAIN" .

Item	Connector	Terminal	Continuity
Ground	F47	25, 48 - Ground	Yes

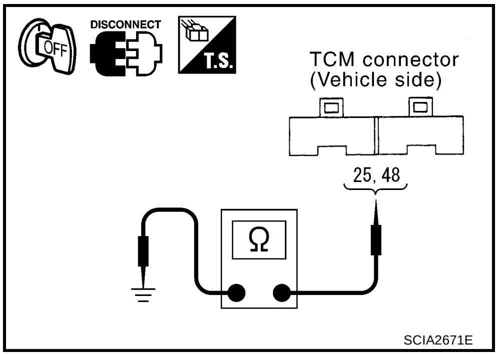

OK or NG

OK >> GO TO 5.
NG >> Repair open circuit or short to ground or short to power in harness or connectors.

5. DETECT MALFUNCTIONING ITEM

Check the following.

- Harness for short or open between ignition switch and combination meter
- Combination meter. Refer to DI-4, "COMBINATION METERS" .

OK or NG

OK >> GO TO 6.
NG >> Repair or replace damaged parts.

6. CHECK SYMPTOM

Check again. Refer to AT-56, "Check before Engine Is Started" .

OK or NG

OK >> **INSPECTION END**
NG >> GO TO 7.

7. CHECK TCM

1. Check TCM input/output signals. Refer to AT-76, "TCM Terminals and Reference Value" .
2. If NG, recheck TCM pin terminals for damage or loose connection with harness connector.

OK or NG

OK >> **INSPECTION END**
NG >> Repair or replace damaged parts.

Engine Cannot Be Started in “P” and “N” Position

ACS007ZF

SYMPTOM:

- **Engine cannot be started with selector lever in “P” or “N” position.**
- **Engine can be started with selector lever in “D”, “2”, “1” or “R” position.**

1. CHECK SELF-DIAGNOSIS RESULTS

Perform self-diagnosis. Refer to AT-81, "SELF-DIAGNOSTIC RESULT MODE" .

Do the self-diagnosis results indicate PNP switch circuit?

YES >> Check PNP switch circuit. Refer to AT-96, "DTC P0705 PARK/NEUTRAL POSITION (PNP) SWITCH" .

NO >> GO TO 2.

2. CHECK PNP SWITCH

Check continuity between PNP switch harness connector terminals. Refer to AT-193, "Wiring Diagram — AT — NONDTC" .

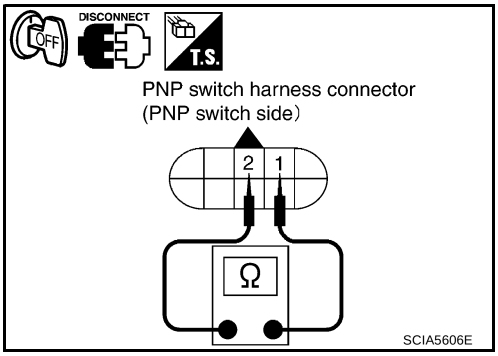

Selector lever position	Connector	terminal	Continuity
“P”, “N”	F24	1 - 2	Yes
Other positions			No

OK or NG

OK >> GO TO 4.

NG >> GO TO 3.

3. CHECK CONTROL CABLE ADJUSTMENT

Check PNP switch again with control cable disconnected from manual shaft of A/T assembly. Refer to test group 2.

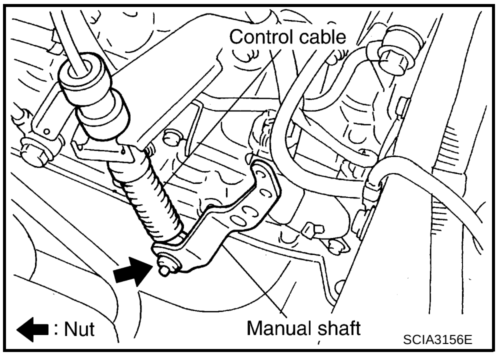

OK or NG

OK >> Adjust control cable. Refer to AT-243, "Adjustment of A/T Position" .

NG >> 1. Check PNP switch (Refer to test group 2.) again after adjusting PNP switch (AT-255).

- If OK, **INSPECTION END**
- If NG, repair or replace PNP switch. Refer to AT-254, "REMOVAL AND INSTALLATION" .

4. CHECK STARTING SYSTEM

Check starting system. Refer to SC-9, "STARTING SYSTEM" .

OK or NG

OK >> **INSPECTION END**

NG >> Repair or replace damaged parts.

In “P” Position, Vehicle Moves Forward or Backward When Pushed

ACS007ZG

SYMPTOM:
Vehicle moves when it is pushed forward or backward with selector lever in “P” position.

1. CHECK CONTROL CABLE

Check control cable. Refer to AT-244, "Checking of A/T Position" .

OK or NG

OK >> GO TO 2.
NG >> Adjust control cable. Refer to AT-243, "Adjustment of A/T Position" .

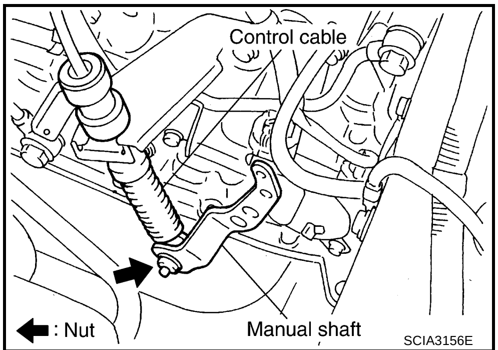

SCIA3156E

2. CHECK PARKING COMPONENTS

Check parking components. Refer to AT-263, "Components" and AT-271, "DISASSEMBLY" .

OK or NG

OK >> **INSPECTION END**
NG >> Repair or replace damaged parts.

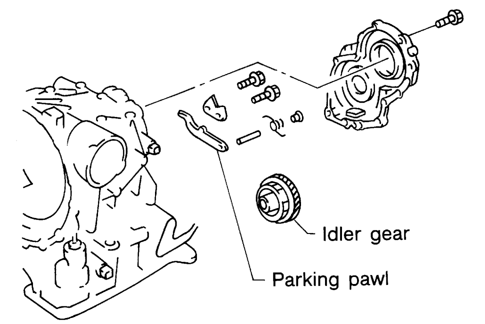

SAT282F

In “N” Position, Vehicle Moves

ACS007ZH

SYMPTOM:

Vehicle moves forward or backward when selecting “N” position.

1. CHECK CONTROL CABLE

Check control cable. Refer to AT-244, "Checking of A/T Position" .

OK or NG

OK >> GO TO 2.

NG >> Adjust control cable. Refer to AT-243, "Adjustment of A/T Position" .

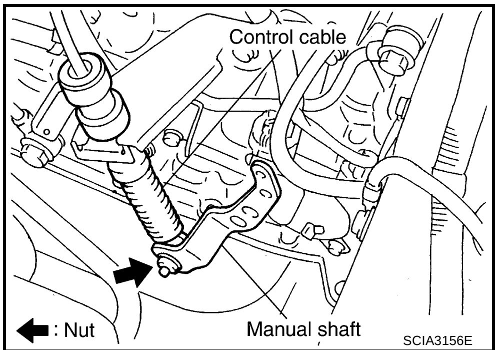

SCIA3156E

2. CHECK A/T FLUID LEVEL

Check A/T fluid level. Refer to AT-16, "Checking A/T Fluid" .

OK or NG

OK >> GO TO 3.

NG >> Refill ATF.

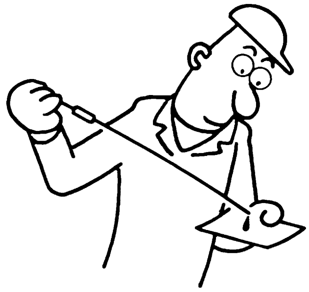

SAT638A

3. CHECK A/T FLUID CONDITION

1. Remove oil pan. Refer to AT-263, "Components" .
2. Check A/T fluid condition. Refer to AT-51, "A/T Fluid Condition Check" .

OK or NG

OK >> GO TO 5.

NG >> GO TO 4.

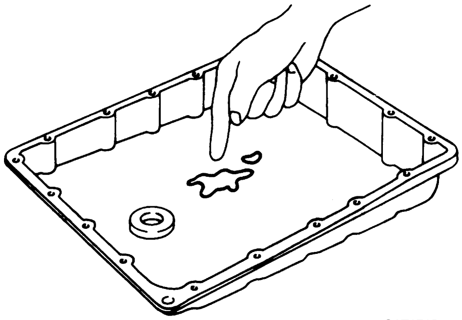

SAT171B

4. DETECT MALFUNCTIONING ITEM

1. Disassemble A/T. Refer to AT-271, "DISASSEMBLY" .
2. Check the following.

- Forward clutch assembly. Refer to AT-322, "Forward and Overrun Clutches" .
- Overrun clutch assembly. Refer to AT-322, "Forward and Overrun Clutches" .
- Reverse clutch assembly. Refer to AT-311, "Reverse Clutch" .

OK or NG

OK >> GO TO 5.

NG >> Repair or replace damaged parts.

5. CHECK SYMPTOM

Check again. Refer to AT-57, "Check at Idle" .

OK or NG

OK >> **INSPECTION END**
NG >> GO TO 6.

6. CHECK TCM

1. Check TCM input/output signals. Refer to AT-76, "TCM Terminals and Reference Value" .
2. If NG, recheck TCM pin terminals for damage or loose connection with harness connector.

OK or NG

OK >> **INSPECTION END**
NG >> Repair or replace damaged parts.

Large Shock “N” → “R” Position

ACS007ZI

SYMPTOM:
Large shock when shifting from “N” to “R” position.

1. CHECK SELF-DIAGNOSTIC RESULTS

Perform self-diagnosis. Refer to AT-81, "SELF-DIAGNOSTIC RESULT MODE" or AT-89, "Diagnostic Procedure Without CONSULT-II" .

Do the self-diagnosis results indicate A/T fluid temperature sensor, line pressure solenoid valve, accelerator pedal position sensor circuit?

YES >> Check damaged circuit. Refer to AT-101, "DTC P0710 A/T FLUID TEMPERATURE SENSOR CIRCUIT" , AT-151, "DTC P0745 LINE PRESSURE SOLENOID VALVE" or AT-167, "DTC P1705 ACCELERATOR PEDAL POSITION (APP) SENSOR" .
NO >> GO TO 2.

2. CHECK LINE PRESSURE

Check line pressure at idle with selector lever in “D” position. Refer to AT-54, "LINE PRESSURE TEST" .

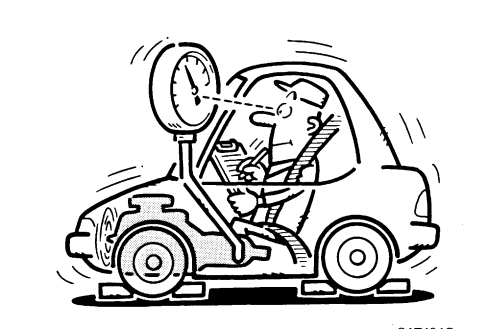
SAT494G

OK or NG

OK >> GO TO 4.
NG >> GO TO 3.

3. DETECT MALFUNCTIONING ITEM

1. Remove control valve assembly. Refer to AT-251, "Control Valve Assembly and Accumulators" .
2. Check the following.
- Valves to control line pressure (Pressure regulator valve, pressure modifier valve, pilot valve and pilot filter)
- Line pressure solenoid valve
- Oil pump assembly. Refer to AT-290, "Oil Pump" .

OK or NG

OK >> GO TO 4.
NG >> Repair or replace damaged parts.

4. CHECK SYMPTOM

Check again. Refer to AT-57, "Check at Idle" .

OK or NG

OK >> **INSPECTION END**
NG >> GO TO 5.

5. CHECK TCM

1. Check TCM input/output signals. Refer to AT-76, "TCM Terminals and Reference Value" .
2. If NG, recheck TCM pin terminals for damage or loose connection with harness connector.

OK or NG

OK >> **INSPECTION END**
NG >> Repair or replace damaged parts.

Vehicle Does Not Creep Backward in “R” Position

ACS007ZJ

SYMPTOM:
Vehicle does not creep backward when selecting “R” position.

1. CHECK A/T FLUID LEVEL

Check A/T fluid level. Refer to AT-16, "Checking A/T Fluid" .

SAT638A

OK or NG

OK >> GO TO 2.
NG >> Refill ATF.

2. CHECK LINE PRESSURE

Check line pressure at idle with selector lever in “R” position. Refer to AT-54, "LINE PRESSURE TEST" .

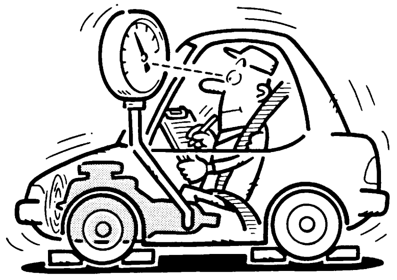
SAT494G

OK or NG

OK >> GO TO 4.
NG >> GO TO 3.

3. DETECT MALFUNCTIONING ITEM

1. Remove control valve assembly. Refer to AT-251, "Control Valve Assembly and Accumulators" .
2. Check the following.
- Valves to control line pressure (Pressure regulator valve, pressure modifier valve, pilot valve and pilot filter)
- Line pressure solenoid valve
3. Disassemble A/T. Refer to AT-271, "DISASSEMBLY" .
4. Check the following.
- Oil pump assembly. Refer to AT-290, "Oil Pump" .

OK or NG

OK >> GO TO 4.
NG >> Repair or replace damaged parts.

A
B
AT
D
E
F
G
H
I
J
K
L
M

4. CHECK STALL REVOLUTION

Check stall revolution with selector lever in “1” and “R” positions. Refer to AT-51, "STALL TEST" .

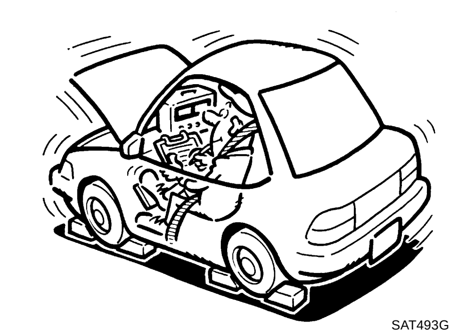
SAT493G

OK or NG

OK >> GO TO 6.
OK in “1” position, NG in “R” position>> GO TO 5.
NG in both “1” and “R” positions>> GO TO 7.

5. DETECT MALFUNCTIONING ITEM

1. Disassemble A/T. Refer to AT-271, "DISASSEMBLY" .
2. Check the following.
- Low & reverse brake assembly. Refer to AT-329, "Low & Reverse Brake" .
- Reverse clutch assembly. Refer to AT-311, "Reverse Clutch" .

OK or NG

OK >> GO TO 6.
NG >> Repair or replace damaged parts.

6. CHECK A/T FLUID CONDITION

1. Remove oil pan. Refer to AT-263, "Components" .
2. Check A/T fluid condition. Refer to AT-51, "A/T Fluid Condition Check" .

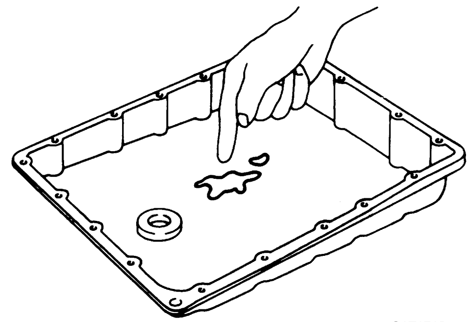
SAT171B

OK or NG

OK >> GO TO 8.
NG >> GO TO 7.

7. DETECT MALFUNCTIONING ITEM

1. Disassemble A/T. Refer to AT-271, "DISASSEMBLY" .
2. Check the following.
- Reverse clutch assembly. Refer to AT-311, "Reverse Clutch" .
- High clutch assembly. Refer to AT-316, "High Clutch" .
- Low & reverse brake assembly. Refer to AT-329, "Low & Reverse Brake" .
- Forward clutch assembly. Refer to AT-322, "Forward and Overrun Clutches" .
- Overrun clutch assembly. Refer to AT-322, "Forward and Overrun Clutches" .

OK or NG

OK >> GO TO 8.
NG >> Repair or replace damaged parts.

8. CHECK SYMPTOM

Check again. Refer to AT-57, "Check at Idle" .

OK or NG

OK >> **INSPECTION END**
NG >> GO TO 9.

9. CHECK TCM

1. Check TCM input/output signals. Refer to AT-76, "TCM Terminals and Reference Value" .
2. If NG, recheck TCM pin terminals for damage or loose connection with harness connector.

OK or NG

OK >> **INSPECTION END**
NG >> Repair or replace damaged parts.

Vehicle Does Not Creep Forward in “D”, “2” or “1” Position

ACS007ZK

SYMPTOM:
Vehicle does not creep forward when selecting “D”, “2” or “1” position.

1. CHECK A/T FLUID LEVEL

Check A/T fluid level. Refer to AT-16, "Checking A/T Fluid" .

OK or NG

OK >> GO TO 2.
NG >> Refill ATF.

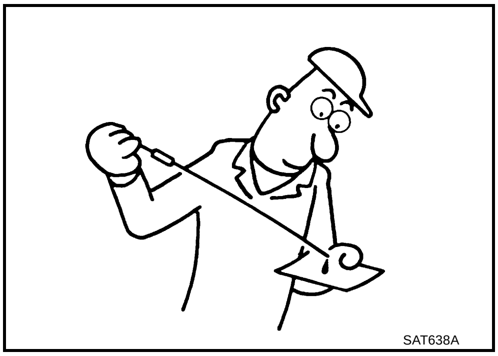

SAT638A

2. CHECK LINE PRESSURE

Check line pressure at idle with selector lever in “D” position. Refer to AT-54, "LINE PRESSURE TEST" .

OK or NG

OK >> GO TO 4.
NG >> GO TO 3.

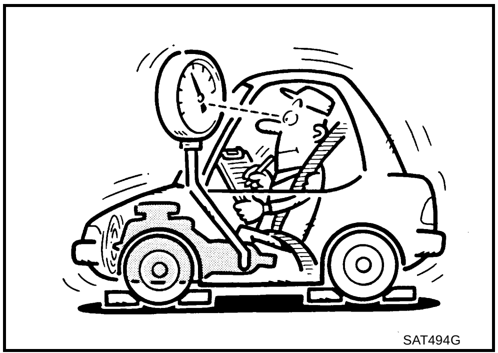

SAT494G

3. DETECT MALFUNCTIONING ITEM

1. Remove control valve assembly. Refer to AT-251, "Control Valve Assembly and Accumulators" .
2. Check the following.
- Valves to control line pressure (Pressure regulator valve, pressure modifier valve, pilot valve and pilot filter)
- Line pressure solenoid valve
3. Disassemble A/T. Refer to AT-271, "DISASSEMBLY" .
4. Check the following.
- Oil pump assembly. Refer to AT-290, "Oil Pump" .

OK or NG

OK >> GO TO 4.
NG >> Repair or replace damaged parts.

4. CHECK STALL REVOLUTION

Check stall revolution with selector lever in “D” position. Refer to AT-51, "STALL TEST" .

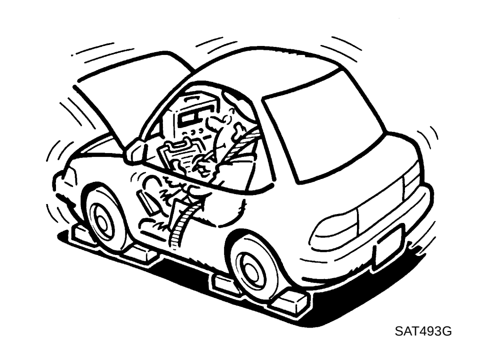
SAT493G

OK or NG

OK >> GO TO 6.
NG >> GO TO 5.

5. DETECT MALFUNCTIONING ITEM

1. Disassemble A/T. Refer to AT-271, "DISASSEMBLY" .
2. Check the following.
– Oil pump assembly. Refer to AT-290, "Oil Pump" .
– Forward clutch assembly. Refer to AT-322, "Forward and Overrun Clutches" .
– Forward one-way clutch. Refer to AT-333, "Rear Internal Gear, Forward Clutch Hub and Overrun Clutch Hub" .
– Low one-way clutch. Refer to AT-271, "DISASSEMBLY" .
– Torque converter. Refer to AT-271, "DISASSEMBLY" .

OK or NG

OK >> GO TO 7.
NG >> Repair or replace damaged parts.

6. CHECK A/T FLUID CONDITION

1. Remove oil pan. Refer to AT-263, "Components" .
2. Check A/T fluid condition. Refer to AT-51, "A/T Fluid Condition Check" .

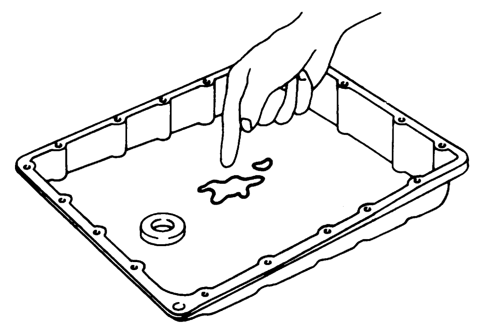
SAT171B

OK or NG

OK >> GO TO 7.
NG >> GO TO 5.

7. CHECK SYMPTOM

Check again. Refer to AT-57, "Check at Idle" .

OK or NG

OK >> **INSPECTION END**
NG >> GO TO 8.

8. CHECK TCM

1. Check TCM input/output signals. Refer to AT-76, "TCM Terminals and Reference Value" .
2. If NG, recheck TCM pin terminals for damage or loose connection with harness connector.

OK or NG

OK >> **INSPECTION END**
NG >> Repair or replace damaged parts.

Vehicle Cannot Be Started From D1

ACS007ZL

SYMPTOM:

Vehicle cannot be started from D1 on "Cruise Test — Part 1" and "Cruise Test — Part 2"

1. CHECK SYMPTOM

Check symptom. Refer to AT-57, "Check at Idle" .

Is "Vehicle Does Not Creep Backward in "R" Position" OK?

OK >> GO TO 2.
NG >> Go to AT-203, "Vehicle Does Not Creep Backward in "R" Position" .

2. CHECK SELF-DIAGNOSTIC RESULTS

Perform self-diagnosis. Refer to AT-81, "SELF-DIAGNOSTIC RESULT MODE" or AT-89, "Diagnostic Procedure Without CONSULT-II" .

Do the self-diagnosis results indicate vehicle speed sensor·A/T (revolution sensor), overrun clutch solenoid valve, torque converter clutch solenoid valve, shift solenoid valve A, B or vehicle speed sensor·MTR circuit?

YES >> Check damaged circuit. Refer to AT-106, "DTC P0720 VEHICLE SPEED SENSOR·A/T (REVOLUTION SENSOR)" , AT-172, "DTC P1760 OVERRUN CLUTCH SOLENOID VALVE" , AT-138, "DTC P0740 TORQUE CONVERTER CLUTCH SOLENOID VALVE" , AT-157, "DTC P0750 SHIFT SOLENOID VALVE A" , AT-162, "DTC P0755 SHIFT SOLENOID VALVE B" or AT-177, "DTC VEHICLE SPEED SENSOR MTR" .
NO >> GO TO 3.

3. CHECK ACCELERATOR PEDAL POSITION SENSOR

Check accelerator pedal position sensor. Refer to AT-167, "DTC P1705 ACCELERATOR PEDAL POSITION (APP) SENSOR" .

OK or NG

OK >> GO TO 4.
NG >> Repair or replace accelerator pedal position sensor.

4. CHECK LINE PRESSURE

Check line pressure at stall point with selector lever in "D" position. Refer to AT-54, "LINE PRESSURE TEST" .

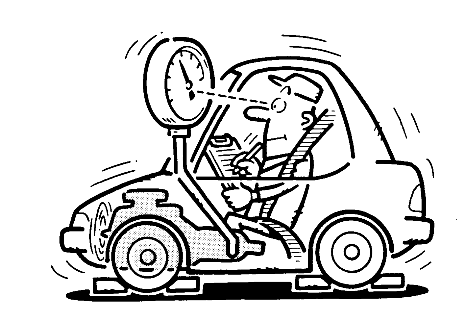

SAT494G

OK or NG

OK >> GO TO 6.
NG >> GO TO 5.

5. DETECT MALFUNCTIONING ITEM

1. Remove control valve assembly. Refer to AT-251, "Control Valve Assembly and Accumulators" .
2. Check the following.
- Shift valve A
- Shift valve B
- Shift solenoid valve A
- Shift solenoid valve B
- Pilot valve
- Pilot filter
3. Disassemble A/T. Refer to AT-271, "DISASSEMBLY" .
4. Check the following.
- Forward clutch assembly. Refer to AT-322, "Forward and Overrun Clutches" .
- Low one-way clutch. Refer to AT-271, "DISASSEMBLY" .
- Forward one-way clutch. Refer to AT-333, "Rear Internal Gear, Forward Clutch Hub and Overrun Clutch Hub" .
- High clutch assembly. Refer to AT-316, "High Clutch" .
- Torque converter. Refer to AT-271, "DISASSEMBLY" .
- Oil pump assembly. Refer to AT-290, "Oil Pump" .

OK or NG

OK >> GO TO 8.
NG >> Repair or replace damaged parts.

6. CHECK A/T FLUID CONDITION

1. Remove oil pan. Refer to AT-263, "Components" .
2. Check A/T fluid condition. Refer to AT-51, "A/T Fluid Condition Check" .

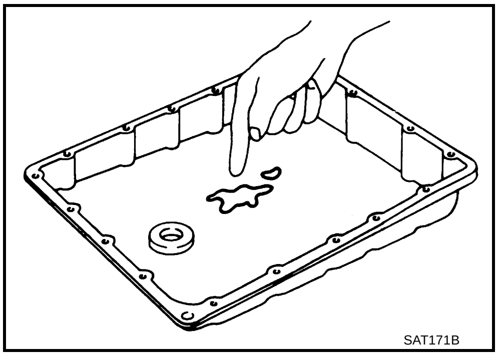

OK or NG

OK >> GO TO 7.
NG >> GO TO 5.

7. DETECT MALFUNCTIONING ITEM

1. Remove control valve assembly. Refer to AT-251, "Control Valve Assembly and Accumulators" .
2. Check the following.
- Shift valve A
- Shift valve B
- Shift solenoid valve A
- Shift solenoid valve B
- Pilot valve
- Pilot filter

OK or NG

OK >> GO TO 8.
NG >> Repair or replace damage parts.

8. CHECK SYMPTOM

Check again. Refer to AT-59, "Cruise Test — Part 1" and AT-62, "Cruise Test — Part 2" .

OK or NG

OK >> **INSPECTION END**
NG >> GO TO 9.

9. CHECK TCM

1. Check TCM input/output signals. Refer to AT-76, "TCM Terminals and Reference Value" .
2. If NG, recheck TCM pin terminals for damage or loose connection with harness connector.

OK or NG

OK >> **INSPECTION END**
NG >> Repair or replace damaged parts.

A/T Does Not Shift: D1 → D2 or Does Not Kickdown: D4 → D2

ACS007ZM

SYMPTOM:
A/T does not shift from D1 to D2 at the specified speed on “Cruise Test — Part 1”.
A/T does not shift from D4 to D2 when depressing accelerator pedal fully at the specified speed on “Cruise Test — Part 2”.

1. CHECK SYMPTOM

Check symptom. Refer to AT-57, "Check at Idle" and AT-59, "Cruise Test — Part 1" .

Are “Vehicle Dose Not Creep Forward in “D”, “2” or “1” Position and “Vehicle Cannot Be Started from D1” OK?

OK >> GO TO 2.
NG >> Go to AT-206, "Vehicle Does Not Creep Forward in “D”, “2” or “1” Position" and AT-208, "Vehicle Cannot Be Started From D1" .

2. CHECK CONTROL CABLE

Check control cable. Refer to AT-244, "Checking of A/T Position" .

OK or NG

OK >> GO TO 3.
NG >> Adjust control cable. Refer to AT-243, "Adjustment of A/T Position" .

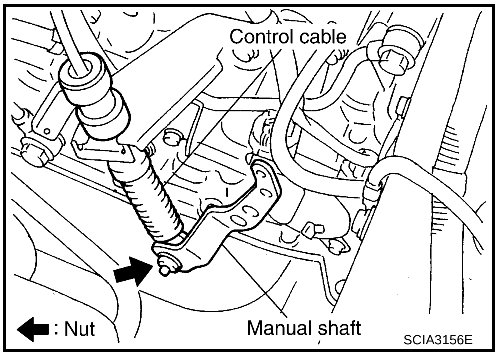

3. CHECK VEHICLE SPEED SENSOR·A/T AND VEHICLE SPEED SENSOR·MTR CIRCUIT

Check vehicle speed sensor·A/T (revolution sensor) and vehicle speed sensor·MTR circuit. Refer to AT-106, "DTC P0720 VEHICLE SPEED SENSOR·A/T (REVOLUTION SENSOR)" and AT-177, "DTC VEHICLE SPEED SENSOR MTR" .

OK or NG

OK >> GO TO 4.
NG >> Repair or replace vehicle speed sensor·A/T (revolution sensor) and vehicle speed sensor·MTR circuits.

4. CHECK ACCELERATOR PEDAL POSITION SENSOR

Check accelerator pedal position sensor. Refer to AT-167, "DTC P1705 ACCELERATOR PEDAL POSITION (APP) SENSOR" .

OK or NG

OK >> GO TO 5.
NG >> Repair or replace accelerator pedal position sensor.

5. CHECK A/T FLUID CONDITION

1. Remove oil pan. Refer to AT-263, "Components" .
2. Check A/T fluid condition. Refer to AT-51, "A/T Fluid Condition Check" .

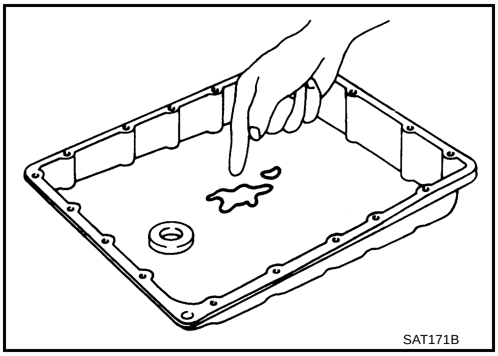

OK or NG

OK >> GO TO 7.
NG >> GO TO 6.

6. DETECT MALFUNCTIONING ITEM

1. Remove control valve. Refer to AT-251, "Control Valve Assembly and Accumulators" .
2. Check the following.
- Shift valve A
- Shift valve B
- Shift solenoid valve A
- Shift solenoid valve B
- Pilot valve
- Pilot filter
3. Disassemble A/T. Refer to AT-271, "DISASSEMBLY" .
4. Check the following.
- Servo piston assembly
- Brake band

OK or NG

OK >> GO TO 8.
NG >> Repair or replace damaged parts.

7. DETECT MALFUNCTIONING ITEM

1. Remove control valve. Refer to AT-251, "Control Valve Assembly and Accumulators" .
2. Check the following.
- Shift valve A
- Shift valve B
- Shift solenoid valve A
- Shift solenoid valve B
- Pilot valve
- Pilot filter

OK or NG

OK >> GO TO 8.
NG >> Repair or replace damaged parts.

8. CHECK SYMPTOM

Check again. Refer to AT-59, "Cruise Test — Part 1" and AT-62, "Cruise Test — Part 2" .

OK or NG

OK >> **INSPECTION END**
NG >> GO TO 9.

9. CHECK TCM

1. Check TCM input/output signals. Refer to AT-76, "TCM Terminals and Reference Value" .
2. If NG, recheck TCM pin terminals for damage or loose connection with harness connector.

OK or NG

OK >> **INSPECTION END**
NG >> Repair or replace damaged parts.

A/T Does Not Shift: D2 → D3

ACS007ZN

SYMPTOM:

A/T does not shift from D2 to D3 at the specified speed on “Cruise Test — Part 1” and “Cruise Test — Part 2”.

1. CHECK SYMPTOM

Check symptom. Refer to AT-59, "Cruise Test — Part 1" and AT-62, "Cruise Test — Part 2" .

Are “Vehicle Does Not Creep Forward in “D”, “2” or “1” Position” and “Vehicle Cannot Be Started From D1 ” OK?

OK >> GO TO 2.
NG >> Go to AT-206, "Vehicle Does Not Creep Forward in “D”, “2” or “1” Position" and AT-208, "Vehicle Cannot Be Started From D1" .

2. CHECK CONTROL CABLE

Check control cable. Refer to AT-244, "Checking of A/T Position" .

OK or NG

OK >> GO TO 3.
NG >> Adjust control cable. Refer to AT-243, "Adjustment of A/T Position" .

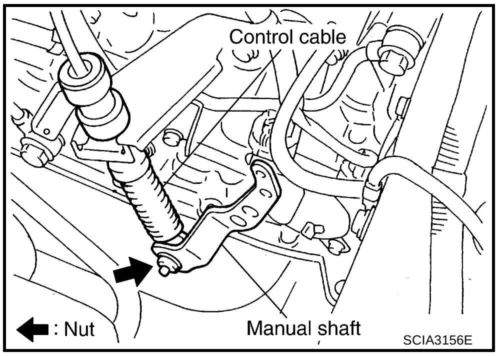

3. CHECK VEHICLE SPEED SENSOR·A/T AND VEHICLE SPEED SENSOR·MTR CIRCUIT

Check vehicle speed sensor·A/T (revolution sensor) and vehicle speed sensor·MTR circuit. Refer to AT-106, "DTC P0720 VEHICLE SPEED SENSOR·A/T (REVOLUTION SENSOR)" and AT-177, "DTC VEHICLE SPEED SENSOR MTR" .

OK or NG

OK >> GO TO 4.
NG >> Repair or replace vehicle speed sensor·A/T (revolution sensor) and vehicle speed sensor·MTR circuits.

4. CHECK ACCELERATOR PEDAL POSITION SENSOR

Check accelerator pedal position sensor. Refer to AT-167, "DTC P1705 ACCELERATOR PEDAL POSITION (APP) SENSOR" .

OK or NG

OK >> GO TO 5.
NG >> Repair or replace accelerator pedal position sensor.

5. CHECK A/T FLUID CONDITION

1. Remove oil pan. Refer to AT-263, "Components" .
2. Check A/T fluid condition. Refer to AT-51, "A/T Fluid Condition Check" .

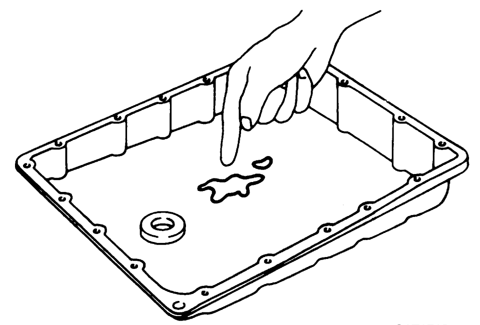

SAT171B

OK or NG

OK >> GO TO 7.
NG >> GO TO 6.

6. DETECT MALFUNCTIONING ITEM

1. Remove control valve assembly. Refer to AT-251, "Control Valve Assembly and Accumulators" .
2. Check the following.
- Shift valve B
- Shift solenoid valve B
- Pilot valve
- Pilot filter
3. Disassemble A/T. Refer to AT-271, "DISASSEMBLY" .
4. Check the following.
- Servo piston assembly
- High clutch assembly. Refer to AT-316, "High Clutch" .
- Oil pump assembly. Refer to AT-290, "Oil Pump" .

OK or NG

OK >> GO TO 8.
NG >> Repair or replace damaged parts.

7. DETECT MALFUNCTIONING ITEM

1. Remove control valve assembly. Refer to AT-251, "Control Valve Assembly and Accumulators" .
2. Check the following.
- Shift valve B
- Shift solenoid valve B
- Pilot valve
- Pilot filter

OK or NG

OK >> GO TO 8.
NG >> Repair or replace damaged parts.

8. CHECK SYMPTOM

Check again. Refer to AT-59, "Cruise Test — Part 1" and AT-62, "Cruise Test — Part 2" .

OK or NG

OK >> **INSPECTION END**
NG >> GO TO 9.

9. CHECK TCM

1. Check TCM input/output signals. Refer to AT-76, "TCM Terminals and Reference Value" .
2. If NG, recheck TCM pin terminals for damage or loose connection with harness connector.

OK or NG

OK >> **INSPECTION END**
NG >> Repair or replace damaged parts.

A/T Does Not Shift: D3 → D4

ACS007ZO

SYMPTOM:

- **A/T does not shift from D3 to D4 at the specified speed on “Cruise Test — Part 1” and “Cruise Test — Part 2”.**
- **A/T must be warm before D3 to D4 shift will occur.**

1. CHECK SYMPTOM

Check symptom. Refer to AT-59, "Cruise Test — Part 1" and AT-62, "Cruise Test — Part 2" .

Are “Vehicle Does Not Creep Forward in “D”, “2” or “1” Position” and “Vehicle Cannot Be Started From D1 ” OK?

OK >> GO TO 2.
NG >> Go to AT-206, "Vehicle Does Not Creep Forward in “D”, “2” or “1” Position" and AT-208, "Vehicle Cannot Be Started From D1" .

2. CHECK SELF-DIAGNOSTIC RESULTS

Perform self-diagnosis. Refer to AT-81, "SELF-DIAGNOSTIC RESULT MODE" or AT-89, "Diagnostic Procedure Without CONSULT-II" .

Do the self-diagnosis results indicate PNP switch, A/T fluid temperature sensor, vehicle speed sensor·A/T (revolution sensor), shift solenoid valve A or B, vehicle speed sensor·MTR circuit?

YES >> Check damaged circuit. Refer to AT-96, "DTC P0705 PARK/NEUTRAL POSITION (PNP) SWITCH" , AT-101, "DTC P0710 A/T FLUID TEMPERATURE SENSOR CIRCUIT" , AT-106, "DTC P0720 VEHICLE SPEED SENSOR·A/T (REVOLUTION SENSOR)" , AT-157, "DTC P0750 SHIFT SOLENOID VALVE A" , AT-162, "DTC P0755 SHIFT SOLENOID VALVE B" or AT-177, "DTC VEHICLE SPEED SENSOR MTR" .
NO >> GO TO 3.

3. CHECK ACCELERATOR PEDAL POSITION SENSOR

Check accelerator pedal position sensor. Refer to AT-167, "DTC P1705 ACCELERATOR PEDAL POSITION (APP) SENSOR" .

OK or NG

OK >> GO TO 4.
NG >> Repair or replace accelerator pedal position sensor.

4. CHECK A/T FLUID CONDITION

1. Remove oil pan. Refer to AT-263, "Components" .
2. Check A/T fluid condition. Refer to AT-51, "A/T Fluid Condition Check" .

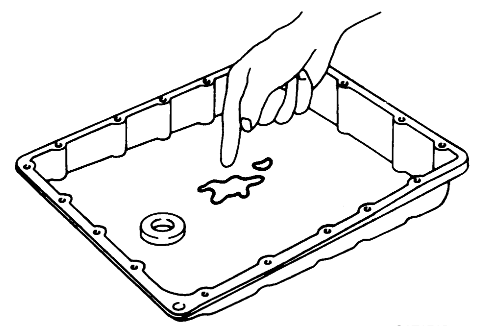

SAT171B

OK or NG

OK >> GO TO 6.
NG >> GO TO 5.

5. DETECT MALFUNCTIONING ITEM

1. Remove control valve assembly. Refer to AT-251, "Control Valve Assembly and Accumulators" .
2. Check the following.
- Shift valve A
- Overrun clutch control valve
- Shift solenoid valve A
- Overrun clutch solenoid valve
- Pilot valve
- Pilot filter
3. Disassemble A/T. Refer to AT-271, "DISASSEMBLY" .
4. Check the following.
- Servo piston assembly
- Brake band
- Torque converter. Refer to AT-271, "DISASSEMBLY" .
- Oil pump assembly. Refer to AT-290, "Oil Pump" .

OK or NG

OK >> GO TO 7.
NG >> Repair or replace damaged parts.

6. DETECT MALFUNCTIONING ITEM

1. Remove control valve assembly. Refer to AT-251, "Control Valve Assembly and Accumulators" .
2. Check the following.
- Shift valve A
- Overrun clutch control valve
- Shift solenoid valve A
- Pilot valve
- Pilot filter

OK or NG

OK >> GO TO 7.
NG >> Repair or replace damaged parts.

7. CHECK SYMPTOM

Check again. Refer to AT-59, "Cruise Test — Part 1" and AT-62, "Cruise Test — Part 2" .

OK or NG

OK >> **INSPECTION END**
NG >> GO TO 8.

8. CHECK TCM

1. Check TCM input/output signals. Refer to AT-76, "TCM Terminals and Reference Value" .
2. If NG, recheck TCM pin terminals for damage or loose connection with harness connector.

OK or NG

OK >> **INSPECTION END**
NG >> Repair or replace damaged parts.

A/T Does Not Perform Lock-up

ACS007ZP

A
B
AT
D
E
F
G
H
I
J
K
L
M

SYMPTOM:
A/T does not perform lock-up at the specified speed on "Cruise Test — Part 1".

1. CHECK SELF-DIAGNOSTIC RESULTS

Perform self-diagnosis. Refer to AT-81, "SELF-DIAGNOSTIC RESULT MODE" or AT-89, "Diagnostic Procedure Without CONSULT-II" .

Do the self-diagnosis results indicate vehicle speed sensor·A/T (revolution sensor), A/T fluid temperature sensor, vehicle speed sensor·MTR, engine speed signal, torque converter clutch solenoid valve circuit?

YES >> Check damaged circuit. Refer to AT-106, "DTC P0720 VEHICLE SPEED SENSOR·A/T (REVOLUTION SENSOR)" , AT-101, "DTC P0710 A/T FLUID TEMPERATURE SENSOR CIRCUIT" , AT-177, "DTC VEHICLE SPEED SENSOR MTR" , AT-112, "DTC P0725 ENGINE SPEED SIGNAL" or AT-138, "DTC P0740 TORQUE CONVERTER CLUTCH SOLENOID VALVE" .
NO >> GO TO 2.

2. CHECK ACCELERATOR PEDAL POSITION SENSOR

Check accelerator pedal position sensor. Refer to AT-167, "DTC P1705 ACCELERATOR PEDAL POSITION (APP) SENSOR" .

OK or NG

OK >> GO TO 3.
NG >> Repair or replace accelerator pedal position sensor.

3. DETECT MALFUNCTIONING ITEM

1. Remove control valve assembly. Refer to AT-251, "Control Valve Assembly and Accumulators" .
2. Check the following.
   - Torque converter clutch control valve
   - Torque converter clutch solenoid valve
   - Torque converter relief valve
   - Pilot valve
   - Pilot filter
3. Disassemble A/T. Refer to AT-271, "DISASSEMBLY" .
4. Check the following.
   - Torque converter. Refer to AT-271, "DISASSEMBLY" .

OK or NG

OK >> GO TO 4.
NG >> Repair or replace damaged parts.

4. CHECK SYMPTOM

Check again. Refer to AT-59, "Cruise Test — Part 1" .

OK or NG

OK >> **INSPECTION END**
NG >> GO TO 5.

5. CHECK TCM

1. Check TCM input/output signals. Refer to AT-76, "TCM Terminals and Reference Value" .
2. If NG, recheck TCM pin terminals for damage or loose connection with harness connector.

OK or NG

OK >> **INSPECTION END**
NG >> Repair or replace damaged parts.

A/T Does Not Hold Lock-up Condition

ACS007ZQ

SYMPTOM:
A/T does not hold lock-up condition for more than 30 seconds on “Cruise Test — Part 1”.

1. CHECK SELF-DIAGNOSTIC RESULTS

Perform self-diagnosis. Refer to AT-81, "SELF-DIAGNOSTIC RESULT MODE" or AT-89, "Diagnostic Procedure Without CONSULT-II" .

Do the self-diagnosis results indicate engine speed signal?

YES >> Check engine speed signal circuit. Refer to AT-112, "DTC P0725 ENGINE SPEED SIGNAL" .
NO >> GO TO 2.

2. CHECK A/T FLUID CONDITION

1. Remove oil pan. Refer to AT-263, "Components" .
2. Check A/T fluid condition. Refer to AT-51, "A/T Fluid Condition Check" .

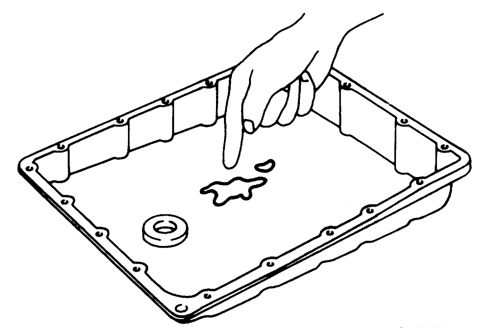

SAT171B

OK or NG

OK >> GO TO 4.
NG >> GO TO 3.

3. DETECT MALFUNCTIONING ITEM

1. Remove control valve assembly. Refer to AT-251, "Control Valve Assembly and Accumulators" .
2. Check the following.
   - Torque converter clutch control valve
   - Torque converter clutch solenoid valve
   - Pilot valve
   - Pilot filter
3. Disassemble A/T. Refer to AT-271, "DISASSEMBLY" .
4. Check the following.
   - Torque converter. Refer to AT-271, "DISASSEMBLY" .
   - Oil pump assembly. Refer to AT-290, "Oil Pump" .

OK or NG

OK >> GO TO 5.
NG >> Repair or replace damaged parts.

4. DETECT MALFUNCTIONING ITEM

1. Remove control valve assembly. Refer to AT-251, "Control Valve Assembly and Accumulators" .
2. Check the following.
   - Torque converter clutch control valve
   - Torque converter clutch solenoid valve
   - Pilot valve
   - Pilot filter

OK or NG

OK >> GO TO 5.
NG >> Repair or replace damaged parts.

5. CHECK SYMPTOM

Check again. Refer to AT-59, "Cruise Test — Part 1" .

OK or NG

OK >> **INSPECTION END**
NG >> GO TO 6.

6. CHECK TCM

1. Check TCM input/output signals. Refer to AT-76, "TCM Terminals and Reference Value" .
2. If NG, recheck TCM pin terminals for damage or loose connection with harness connector.

OK or NG

OK >> **INSPECTION END**
NG >> Repair or replace damaged parts.

A
B
AT
D
E
F
G
H
I
J
K
L
M

Lock-up Is Not Released

ACS007ZR

SYMPTOM:

Lock-up is not released when accelerator pedal is released on “Cruise Test — Part 1”.

1. CHECK ACCELERATOR PEDAL POSITION SENSOR CIRCUIT

Perform self-diagnosis. Refer to AT-81, "SELF-DIAGNOSTIC RESULT MODE" or AT-89, "Diagnostic Procedure Without CONSULT-II" .

Do the self-diagnosis results indicate accelerator pedal position sensor circuit?

YES >> Check accelerator pedal position sensor circuit. Refer to AT-167, "DTC P1705 ACCELERATOR PEDAL POSITION (APP) SENSOR" .
NO >> GO TO 2.

2. CHECK SYMPTOM

Check again. Refer to AT-59, "Cruise Test — Part 1" .

OK or NG

OK >> **INSPECTION END**
NG >> GO TO 3.

3. CHECK TCM

1. Check TCM input/output signals. Refer to AT-76, "TCM Terminals and Reference Value" .
2. If NG, recheck TCM pin terminals for damage or loose connection with harness connector.

OK or NG

OK >> **INSPECTION END**
NG >> Repair or replace damaged parts.

Engine Speed Does Not Return to Idle (Light Braking D4 → D3)

ACS007ZS

SYMPTOM:

Engine speed does not smoothly return to idle when A/T shifts from D4 to D3 on "Cruise Test — Part 1".

1. CHECK SELF-DIAGNOSTIC RESULTS

Perform self-diagnosis. Refer to AT-81, "SELF-DIAGNOSTIC RESULT MODE" or AT-89, "Diagnostic Procedure Without CONSULT-II" .

Do the self-diagnosis results indicate overrun clutch solenoid valve circuit?

YES >> Check overrun clutch solenoid valve circuit. Refer to AT-172, "DTC P1760 OVERRUN CLUTCH SOLENOID VALVE" .
NO >> GO TO 2.

2. CHECK ACCELERATOR PEDAL POSITION SENSOR

Check accelerator pedal position sensor. Refer to AT-167, "DTC P1705 ACCELERATOR PEDAL POSITION (APP) SENSOR" .

OK or NG

OK >> GO TO 3.
NG >> Repair or replace accelerator pedal position sensor.

3. CHECK A/T FLUID CONDITION

1. Remove oil pan. Refer to AT-263, "Components" .
2. Check A/T fluid condition. Refer to AT-51, "A/T Fluid Condition Check" .

OK or NG

OK >> GO TO 5.
NG >> GO TO 4.

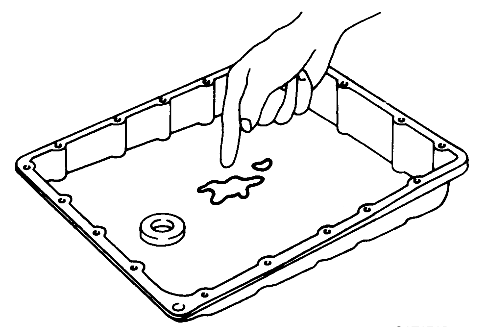

SAT171B

4. DETECT MALFUNCTIONING ITEM

1. Remove control valve assembly. Refer to AT-251, "Control Valve Assembly and Accumulators" .
2. Check the following.
– Overrun clutch control valve
– Overrun clutch reducing valve
– Overrun clutch solenoid valve
3. Disassemble A/T. Refer to AT-271, "DISASSEMBLY" .
4. Check the following.
– Overrun clutch assembly. Refer to AT-322, "Forward and Overrun Clutches" .

OK or NG

OK >> GO TO 6.
NG >> Repair or replace damaged parts.

5. DETECT MALFUNCTIONING ITEM

1. Remove control valve assembly. Refer to AT-251, "Control Valve Assembly and Accumulators" .
2. Check the following.
– Overrun clutch control valve
– Overrun clutch reducing valve
– Overrun clutch solenoid valve

OK or NG

OK >> GO TO 6.
NG >> Repair or replace damaged parts.

6. CHECK SYMPTOM

Check again. Refer to AT-59, "Cruise Test — Part 1" .

OK or NG

OK >> **INSPECTION END**
NG >> GO TO 7.

7. CHECK TCM

1. Check TCM input/output signals. Refer to AT-76, "TCM Terminals and Reference Value" .
2. If NG, recheck TCM pin terminals for damage or loose connection with harness connector.

OK or NG

OK >> **INSPECTION END**
NG >> Repair or replace damaged parts.

A/T Does Not Shift: D4 → D3 , When OD OFF

ACS007UP

SYMPTOM:
A/T does not shift from D4 to D3 when OD OFF (OD OFF indicator lamp is on.) on “Cruise Test — Part 3”.

1. CHECK CAN COMMUNICATION LINE

Perform self-diagnosis. Refer to AT-81, "SELF-DIAGNOSTIC RESULT MODE" or AT-89, "Diagnostic Procedure Without CONSULT-II" .

Is a malfunction in CAN communication indicated in the results?

YES >> Check CAN communication line. Refer to AT-93, "DTC U1000 CAN COMMUNICATION LINE" .
NO >> GO TO 2.

2. CHECK OVERDRIVE CONTROL SWITCH CIRCUIT

With CONSULT-II

1. Turn ignition switch ON. (Do not start engine)
2. Select “TCM INPUT SIGNALS” in “DATA MONITOR” mode for “A/T” with CONSULT-II.
3. Read out “OVERDRIVE SW”.
   Check the signal of the overdrive control switch is indicated properly.

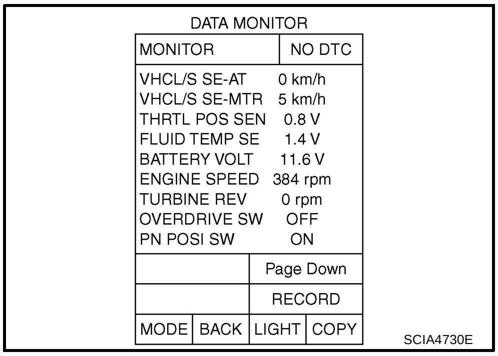

SCIA4730E

Item name	Overdrive control switch Condition	Display value
OVERDRIVE SW	Depressed	ON
	Released	OFF

Without CONSULT-II

1. Turn ignition switch ON. (Do not start engine)
2. Check voltage between A/T device harness connector terminal and ground. Refer to AT-193, "Wiring Diagram — AT — NONDTC" .

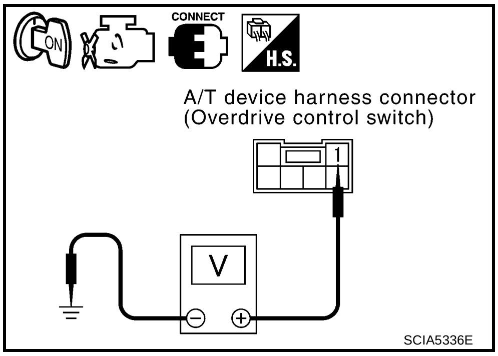

SCIA5336E

Item	Connector	Terminal	Overdrive control switch Condition	Judgement standard (Approx.)
A/T device harness connector (Overdrive control switch)	M58	1 - Ground	Released	Battery voltage
			Depressed	0 V

OK or NG

OK >> GO TO AT-214, "A/T Does Not Shift: D2 → D3" .
NG >> Check overdrive control switch circuit. Refer to AT-235, "TCM Self-Diagnosis Does Not Activate" .

A/T Does Not Shift: $D_3 \rightarrow 2_2$, When Selector Lever "D" → "2" Position

ACS007UQ

SYMPTOM:

A/T does not shift from D_3 to 2_2 when changing selector lever from "D" to "2" position on "Cruise Test — Part 3".

1. CHECK SYMPTOM

Check symptom. Refer to AT-59, "Cruise Test — Part 1" and AT-62, "Cruise Test — Part 2" .

Is "A/T Does Not Shift: $D_1 \rightarrow D_2$ or Does Not Kickdown: $D_4 \rightarrow D_2$" OK?

OK (With CONSULT-II) >>GO TO 2.
OK (Without CONSULT-II) >>GO TO 3.
NG >> Go to AT-211, "A/T Does Not Shift: $D_1 \rightarrow D_2$ or Does Not Kickdown: $D_4 \rightarrow D_2$" .

2. CHECK PNP SWITCH CIRCUIT (WITH CONSULT-II)

With CONSULT-II

1. Turn ignition switch ON. (Do not start engine.)
2. Select "TCM INPUT SIGNALS" in "DATA MONITOR" mode for "A/T" with CONSULT-II.
3. Read out "P·N", "R", "D", "2" and "1" position switches moving selector lever to each position.

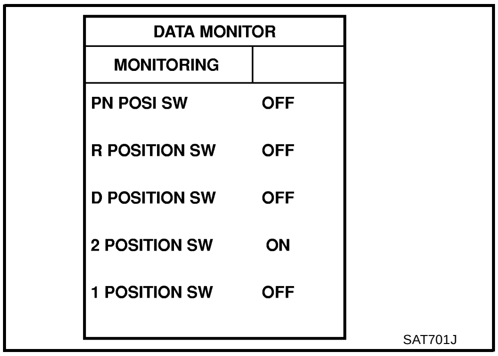

SAT701J

Item name	Condition	Display value
PN POSI SW	When setting selector lever to "N" or "P" position.	ON
	When setting selector lever to other positions.	OFF
R POSITION SW	When setting selector lever to "R" position.	ON
	When setting selector lever to other positions.	OFF
D POSITION SW	When setting selector lever to "D" position.	ON
	When setting selector lever to other positions.	OFF
2 POSITION SW	When setting selector lever to "2" position.	ON
	When setting selector lever to other positions.	OFF
1 POSITION SW	When setting selector lever to "1" position.	ON
	When setting selector lever to other positions.	OFF

OK or NG

OK >> **INSPECTION END**
NG >> Check PNP switch circuit. Refer to AT-96, "DTC P0705 PARK/NEUTRAL POSITION (PNP) SWITCH" .

3. CHECK PNP SWITCH CIRCUIT (WITHOUT CONSULT-II)

Without CONSULT-II

1. Turn ignition switch ON. (Do not start engine.)
2. Check voltage between TCM connector terminals and ground while moving selector lever through each position. Refer to AT-193, "Wiring Diagram — AT — NONDTC" .

Selector lever position	Terminal				
	36	35	34	27	26
“P”, “N”	B	0	0	0	0
“R”	0	B	0	0	0
“D”	0	0	B	0	0
“2”	0	0	0	B	0
“1”	0	0	0	0	B

B: Battery voltage
0: 0 V

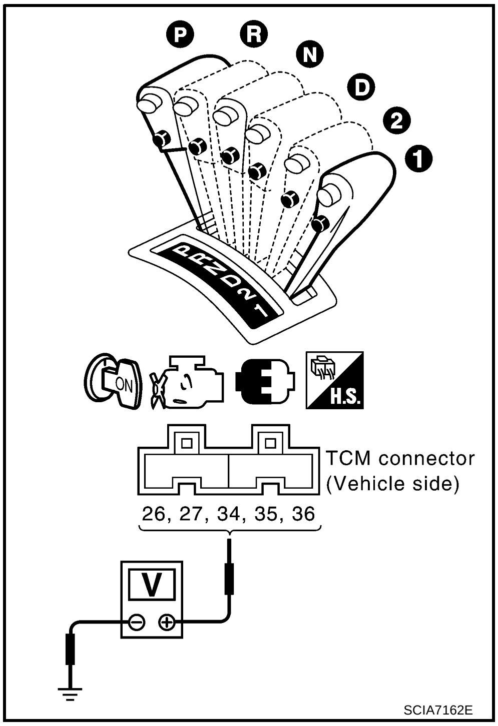

OK or NG

OK >> **INSPECTION END**
NG >> Check PNP switch circuit. Refer to AT-96, "DTC P0705 PARK/NEUTRAL POSITION (PNP) SWITCH" .

A/T Does Not Shift: $2_2 \rightarrow 1_1$, When Selector Lever “2” → “1” on Position

ACS007UR

SYMPTOM:

A/T does not shift from 2_2 to 1_1 when changing selector lever from “2” to “1” position on “Cruise Test — Part 3”.

1. CHECK PNP SWITCH CIRCUIT (WITH CONSULT-II)

With CONSULT-II

1. Turn ignition switch ON. (Do not start engine.)
2. Select “TCM INPUT SIGNALS” in “DATA MONITOR” mode for “A/T” with CONSULT-II.
3. Read out “P·N”, “R”, “D”, “2” and “1” position switches moving selector lever to each position.

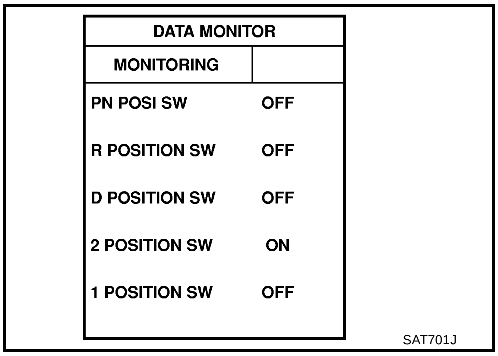

SAT701J

Item name	Condition	Display value
PN POSI SW	When setting selector lever to “N” or “P” position.	ON
	When setting selector lever to other positions.	OFF
R POSITION SW	When setting selector lever to “R” position.	ON
	When setting selector lever to other positions.	OFF
D POSITION SW	When setting selector lever to “D” position.	ON
	When setting selector lever to other positions.	OFF
2 POSITION SW	When setting selector lever to “2” position.	ON
	When setting selector lever to other positions.	OFF
1 POSITION SW	When setting selector lever to “1” position.	ON
	When setting selector lever to other positions.	OFF

OK or NG

OK >> GO TO 3.

NG >> Check PNP switch circuit. Refer to AT-96, "DTC P0705 PARK/NEUTRAL POSITION (PNP) SWITCH" .

2. CHECK PNP SWITCH CIRCUIT (WITHOUT CONSULT-II)

Without CONSULT-II

1. Turn ignition switch ON. (Do not start engine.)
2. Check voltage between TCM connector terminals and ground while moving selector lever through each position. Refer to AT-193, "Wiring Diagram — AT — NONDTC" .

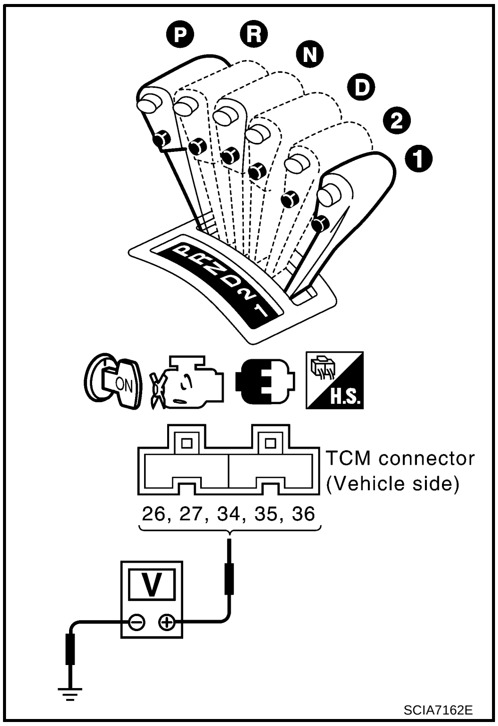

Selector lever position	Terminal				
	36	35	34	27	26
“P”, “N”	B	0	0	0	0
“R”	0	B	0	0	0
“D”	0	0	B	0	0
“2”	0	0	0	B	0
“1”	0	0	0	0	B

B: Battery voltage
0: 0 V

OK or NG

OK >> GO TO 3.
NG >> Check PNP switch circuit. Refer to AT-96, "DTC P0705 PARK/NEUTRAL POSITION (PNP) SWITCH" .

3. CHECK CONTROL CABLE

Check control cable. Refer to AT-244, "Checking of A/T Position" .

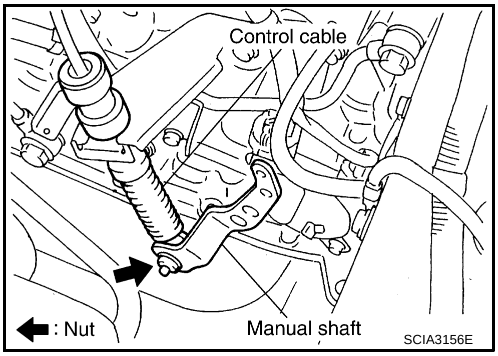

OK or NG

OK >> GO TO 4.
NG >> Adjust control cable. Refer to AT-243, "Adjustment of A/T Position" .

4. CHECK VEHICLE SPEED SENSOR·A/T AND VEHICLE SPEED SENSOR·MTR CIRCUIT

Check vehicle speed sensor·A/T (revolution sensor) and vehicle speed sensor·MTR circuit. Refer to AT-106, "DTC P0720 VEHICLE SPEED SENSOR·A/T (REVOLUTION SENSOR)" and AT-177, "DTC VEHICLE SPEED SENSOR MTR" .

OK or NG

OK >> GO TO 5.
NG >> Repair or replace vehicle speed sensor·A/T (revolution sensor) and vehicle speed sensor·MTR circuits.

5. CHECK A/T FLUID CONDITION

1. Remove oil pan. Refer to AT-263, "Components" .
2. Check A/T fluid condition. Refer to AT-51, "A/T Fluid Condition Check" .

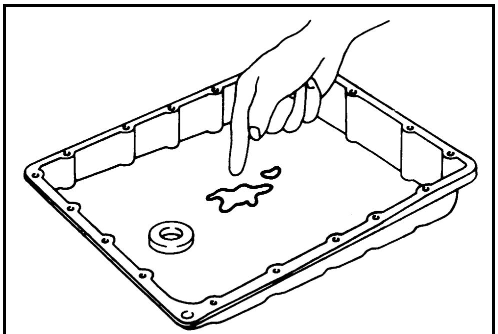

SAT171B

OK or NG

OK >> GO TO 7.
NG >> GO TO 6.

6. DETECT MALFUNCTIONING ITEM

1. Remove control valve assembly. Refer to AT-251, "Control Valve Assembly and Accumulators" .
2. Check the following.
   - Shift valve A
   - Shift solenoid valve A
   - Overrun clutch control valve
   - Overrun clutch solenoid valve
3. Disassemble A/T. Refer to AT-271, "DISASSEMBLY" .
4. Check the following.
   - Servo piston assembly
   - Brake band

OK or NG

OK >> GO TO 7.
NG >> Repair or replace damaged parts.

7. CHECK SYMPTOM

Check again. Refer to AT-63, "Cruise Test — Part 3" .

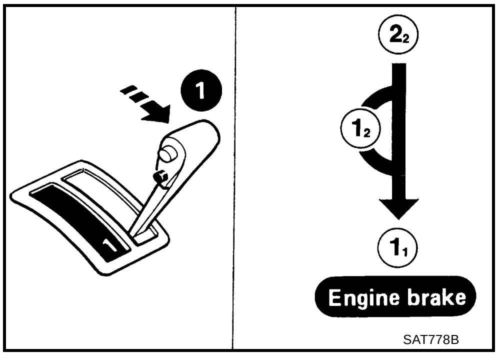

SAT778B

OK or NG

OK >> **INSPECTION END**
NG >> GO TO 8.

8. CHECK TCM

1. Check TCM input/output signals. Refer to AT-76, "TCM Terminals and Reference Value" .
2. If NG, recheck TCM pin terminals for damage or loose connection with harness connector.

OK or NG

OK >> **INSPECTION END**
NG >> Repair or replace damaged parts.

Vehicle Does Not Decelerate by Engine Brake

ACS007US

SYMPTOM:

- **Vehicle does not decelerate by engine brake when shifting from 2_2 (1_2) to 1_1 “Cruise Test — Part 3”.**
- **Vehicle does not decelerate by engine brake when OD OFF (OD OFF indicator lamp is on.) on “Cruise Test — Part 3”.**
- **Vehicle does not decelerate by engine brake when shifting A/T from “D” to “2” position on “Cruise Test — Part 3”.**

1. CHECK CAN COMMUNICATION LINE

Perform self-diagnosis. Refer to AT-81, "SELF-DIAGNOSTIC RESULT MODE" or AT-89, "Diagnostic Procedure Without CONSULT-II" .

Is a malfunction in CAN communication indicated in the results?

YES >> Check CAN communication line. Refer to AT-93, "DTC U1000 CAN COMMUNICATION LINE" .
NO >> GO TO 2.

2. CHECK OVERDRIVE CONTROL SWITCH CIRCUIT

With CONSULT-II

1. Turn ignition switch ON. (Do not start engine)
2. Select “TCM INPUT SIGNALS” in “DATA MONITOR” mode for “A/T” with CONSULT-II.
3. Read out “OVERDRIVE SW”.
   Check the signal of the overdrive control switch is indicated properly.

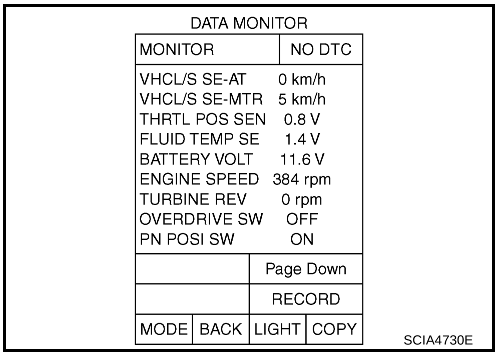

SCIA4730E

Item name	Overdrive control switch Condition	Display value
OVERDRIVE SW	Depressed	ON
	Released	OFF

Without CONSULT-II

1. Turn ignition switch ON. (Do not start engine)
2. Check voltage between A/T device harness connector terminal and ground. Refer to AT-193, "Wiring Diagram — AT — NONDTC" .

Item	Connector	Terminal	Overdrive control switch Condition	Judgement standard (Approx.)
A/T device harness connector (Overdrive control switch)	M58	1 - Ground	Released	Battery voltage
			Depressed	0 V

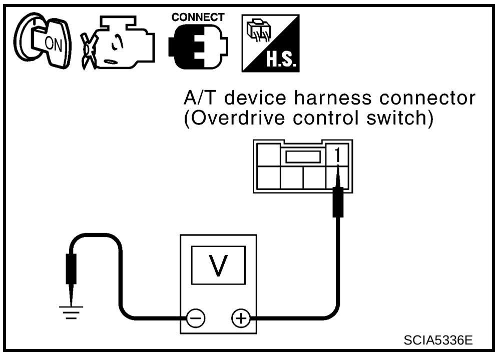

SCIA5336E

OK or NG

OK (With CONSULT-II)>>GO TO 3.
OK (Without CONSULT-II)>>GO TO 4.
NG >> Check overdrive control switch circuit. Refer to AT-235, "TCM Self-Diagnosis Does Not Activate" .

3. CHECK PNP SWITCH CIRCUIT (WITH CONSULT-II)

With CONSULT-II

1. Turn ignition switch ON. (Do not start engine.)
2. Select “TCM INPUT SIGNALS” in “DATA MONITOR” mode for “A/T” with CONSULT-II.
3. Read out “P·N”, “R”, “D”, “2” and “1” position switches moving selector lever to each position.

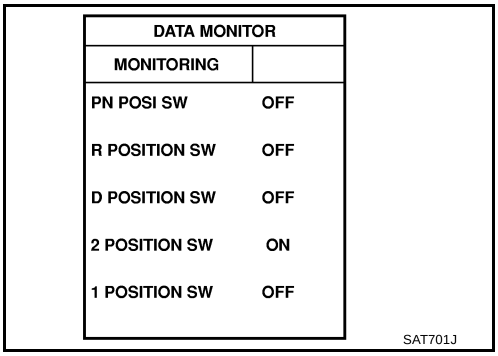

Item name	Condition	Display value
PN POSI SW	When setting selector lever to “N” or “P” position.	ON
	When setting selector lever to other positions.	OFF
R POSITION SW	When setting selector lever to “R” position.	ON
	When setting selector lever to other positions.	OFF
D POSITION SW	When setting selector lever to “D” position.	ON
	When setting selector lever to other positions.	OFF
2 POSITION SW	When setting selector lever to “2” position.	ON
	When setting selector lever to other positions.	OFF
1 POSITION SW	When setting selector lever to “1” position.	ON
	When setting selector lever to other positions.	OFF

OK or NG

OK >> GO TO 5.
NG >> Check PNP switch circuit. Refer to AT-96, "DTC P0705 PARK/NEUTRAL POSITION (PNP) SWITCH" .

4. CHECK PNP SWITCH CIRCUIT (WITHOUT CONSULT-II)

Without CONSULT-II

1. Turn ignition switch ON. (Do not start engine.)
2. Check voltage between TCM connector terminals and ground while moving selector lever through each position. Refer to AT-193, "Wiring Diagram — AT — NONDTC" .

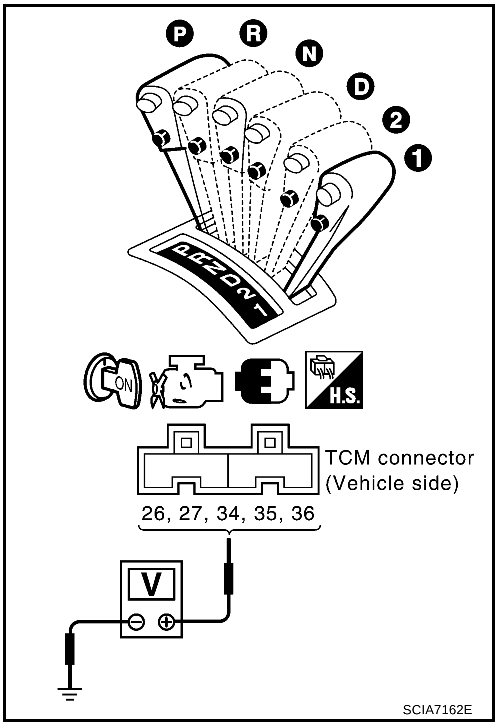

Selector lever position	Terminal				
	36	35	34	27	26
“P”, “N”	B	0	0	0	0
“R”	0	B	0	0	0
“D”	0	0	B	0	0
“2”	0	0	0	B	0
“1”	0	0	0	0	B

B: Battery voltage
0: 0 V

OK or NG

OK >> GO TO 5.
NG >> Check PNP switch circuit. Refer to AT-96, "DTC P0705 PARK/NEUTRAL POSITION (PNP) SWITCH" .

5. CHECK CONTROL CABLE

Check control cable. Refer to AT-244, "Checking of A/T Position" .

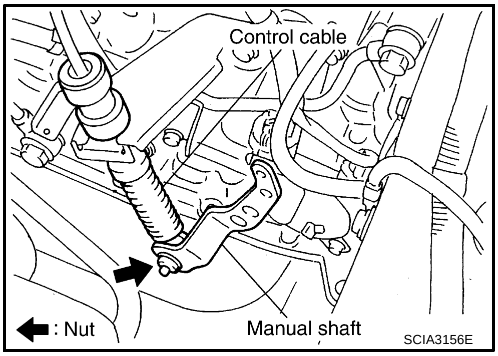

OK or NG

OK >> GO TO 6.
NG >> Adjust control cable. Refer to AT-243, "Adjustment of A/T Position" .

6. CHECK VEHICLE SPEED SENSOR·A/T AND VEHICLE SPEED SENSOR·MTR CIRCUIT

Check vehicle speed sensor·A/T (revolution sensor) and vehicle speed sensor·MTR circuit. Refer to AT-106, "DTC P0720 VEHICLE SPEED SENSOR·A/T (REVOLUTION SENSOR)" and AT-177, "DTC VEHICLE SPEED SENSOR MTR" .

OK or NG

OK >> GO TO 7.
NG >> Repair or replace vehicle speed sensor·A/T (revolution sensor) and vehicle speed sensor·MTR circuits.

7. CHECK ACCELERATOR PEDAL POSITION SENSOR

Check accelerator pedal position sensor. Refer to AT-167, "DTC P1705 ACCELERATOR PEDAL POSITION (APP) SENSOR" .

OK or NG

OK >> GO TO 8.
NG >> Repair or replace accelerator pedal position sensor.

8. CHECK A/T FLUID CONDITION

1. Remove oil pan. Refer to AT-263, "Components" .
2. Check A/T fluid condition. Refer to AT-51, "A/T Fluid Condition Check" .

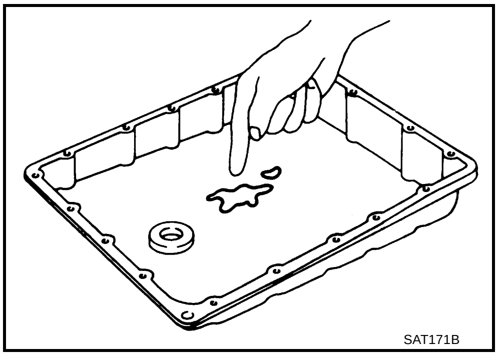

OK or NG

OK >> GO TO 10.
NG >> GO TO 9.

9. DETECT MALFUNCTIONING ITEM

1. Remove control valve assembly. Refer to AT-251, "Control Valve Assembly and Accumulators" .
2. Check the following.
- Shift valve A
- Overrun clutch solenoid valve
3. Disassemble A/T. Refer to AT-271, "DISASSEMBLY" .
4. Check the following.
- Overrun clutch assembly. Refer to AT-322, "Forward and Overrun Clutches" .
- Low & reverse brake assembly. Refer to AT-329, "Low & Reverse Brake" .

OK or NG

OK >> GO TO 10.
NG >> Repair or replace damaged parts.

10. CHECK SYMPTOM

Check again. Refer to AT-63, "Cruise Test — Part 3" .

OK or NG

OK >> **INSPECTION END**
NG >> GO TO 11.

11. CHECK TCM

1. Check TCM input/output signals. Refer to AT-76, "TCM Terminals and Reference Value" .
2. If NG, recheck TCM pin terminals for damage or loose connection with harness connector.

OK or NG

OK >> **INSPECTION END**
NG >> Repair or replace damaged parts.

TCM Self-Diagnosis Does Not Activate

ACS007UT

SYMPTOM:
OD OFF indicator lamp does not come on in TCM self-diagnostic procedure even if the lamp circuit is good.

DESCRIPTION

- PNP switch
  PNP switch assembly includes a transaxle position switch. The transaxle position switch detects the selector lever position and sends a signal to the TCM.

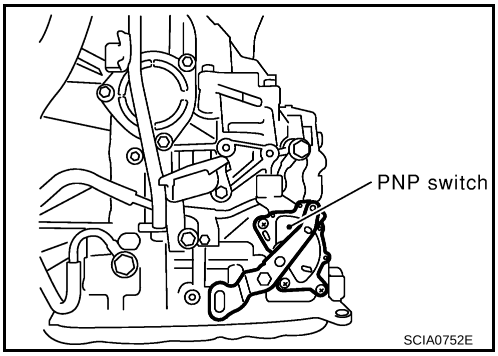

SCIA0752E

- Overdrive control switch
  Overdrive control switch detects the switch position (ON or OFF) and sends a signal to the TCM.

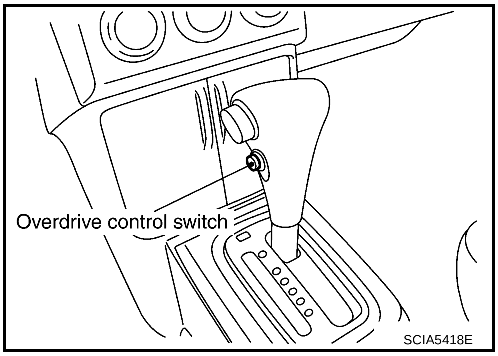

SCIA5418E

- Closed throttle position signal and wide open throttle position signal
  ECM judges throttle opening based on a signal from accelerator pedal position sensor, and sends the signal via CAN communication to TCM.

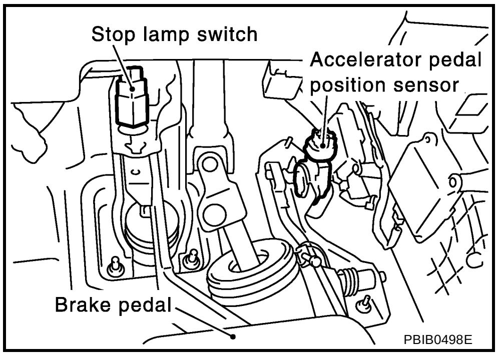

PBIB0498E

DIAGNOSTIC PROCEDURE

1. CHECK CAN COMMUNICATION LINE

Perform self-diagnosis. Refer to AT-81, "SELF-DIAGNOSTIC RESULT MODE" .

Is a malfunction in the CAN communication indicated in the results?

YES >> Check CAN communication line. Refer to AT-93, "DTC U1000 CAN COMMUNICATION LINE" .
NO (With CONSULT-II) >>GO TO 2.
NO (Without CONSULT-II) >>GO TO 3.

2. CHECK PNP SWITCH CIRCUIT (WITH CONSULT-II)

With CONSULT-II

1. Turn ignition switch ON. (Do not start engine.)
2. Select “TCM INPUT SIGNALS” in “DATA MONITOR” mode for “A/T” with CONSULT-II.
3. Read out “P·N”, “R”, “D”, “2” and “1” position switches moving selector lever to each position.

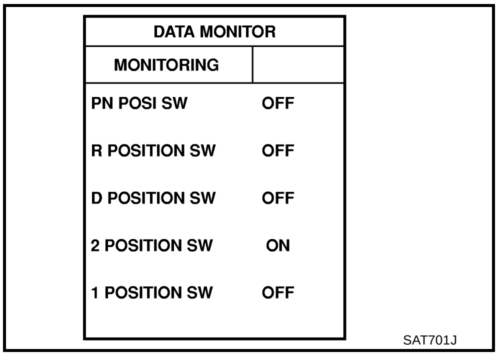

Item name	Condition	Display value
PN POSI SW	When setting selector lever to “N” or “P” position.	ON
	When setting selector lever to other positions.	OFF
R POSITION SW	When setting selector lever to “R” position.	ON
	When setting selector lever to other positions.	OFF
D POSITION SW	When setting selector lever to “D” position.	ON
	When setting selector lever to other positions.	OFF
2 POSITION SW	When setting selector lever to “2” position.	ON
	When setting selector lever to other positions.	OFF
1 POSITION SW	When setting selector lever to “1” position.	ON
	When setting selector lever to other positions.	OFF

OK or NG

OK >> GO TO 4.
NG >> Check PNP switch circuit. Refer to AT-96, "DTC P0705 PARK/NEUTRAL POSITION (PNP) SWITCH" .

3. CHECK PNP SWITCH CIRCUIT (WITHOUT CONSULT-II)

Without CONSULT-II

1. Turn ignition switch ON. (Do not start engine.)
2. Check voltage between TCM connector terminals and ground while moving selector lever through each position. Refer to AT-193, "Wiring Diagram — AT — NONDTC" .

Selector lever position	Terminal				
	36	35	34	27	26
"P", "N"	B	0	0	0	0
"R"	0	B	0	0	0
"D"	0	0	B	0	0
"2"	0	0	0	B	0
"1"	0	0	0	0	B

B: Battery voltage
0: 0 V

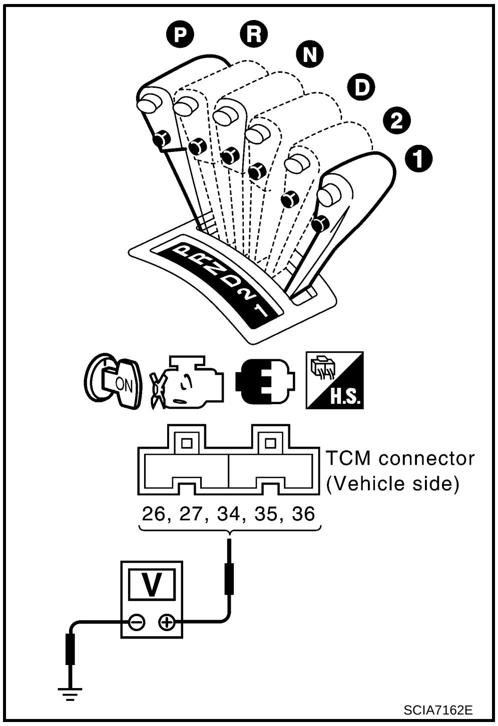

OK or NG

OK >> GO TO 4.
NG >> Check PNP switch circuit. Refer to AT-96, "DTC P0705 PARK/NEUTRAL POSITION (PNP) SWITCH" .

4. CHECK PNP SWITCH

1. Turn ignition switch OFF.
2. Disconnect PNP switch harness connector.
3. Check continuity between PNP switch harness connector terminals.

Selector lever position	Connector	Terminal	Continuity
"P"	F24	1 - 2, 3 - 7	Yes *Continuity should not exist in positions other than the specified positions.
"R"		3 - 8	
"N"		1 - 2, 3 - 9	
"D"		3 - 6	
"2"		3 - 5	
"1"		3 - 4	

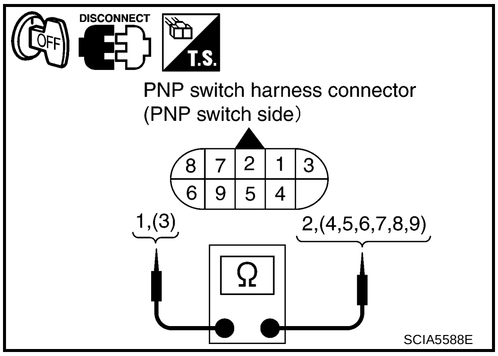

OK or NG

OK >> GO TO 6.
NG >> GO TO 5.

5. CHECK CONTROL CABLE ADJUSTMENT

Check PNP switch again with control cable disconnected from manual shaft of A/T assembly. Refer to test group 4.

OK or NG

OK >> Adjust control cable. Refer to AT-243, "Adjustment of A/T Position" .
NG >> Repair or replace PNP switch.

6. DETECT MALFUNCTIONING ITEM

Check the following.

- Harness for short or open between ignition switch and PNP switch
- Harness for short or open between PNP switch and TCM
- Harness for short or open between PNP switch and combination meter
- Harness for short or open between combination meter and TCM
- 10 A fuse (No.12, located in the fuse block)
- Combination meter. Refer to DI-4, "COMBINATION METERS" .
- Ignition switch. Refer to PG-2, "POWER SUPPLY ROUTING" .

OK or NG

OK >> GO TO 7.
NG >> Repair or replace damaged parts.

7. CHECK OVERDRIVE CONTROL SWITCH CIRCUIT

With CONSULT-II

1. Turn ignition switch ON. (Do not start engine.)
2. Select “TCM INPUT SIGNALS” in “DATA MONITOR” mode for “A/T” with CONSULT-II.
3. Read out “OVERDRIVE SW”.
   Check the signal of overdrive control switch is indicated properly.

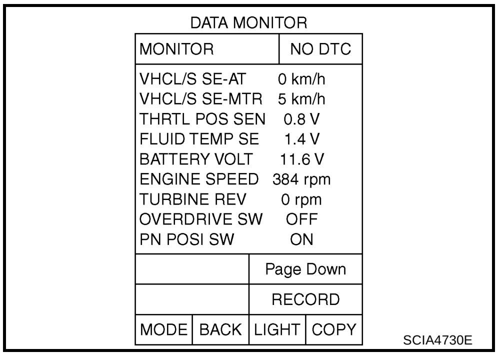

Item name	Overdrive control switch condition	Display value
OVERDRIVE SW	Depressed	ON
	Released	OFF

Without CONSULT-II

1. Turn ignition switch ON. (Do not start engine.)
2. Check voltage between A/T device harness connector terminal and ground. Refer to AT-193, "Wiring Diagram — AT — NON-DTC" .

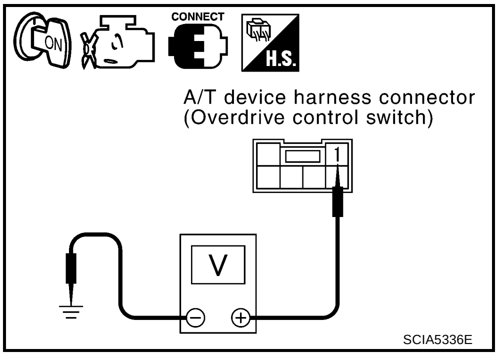

Item	Connector	Terminal	Overdrive control switch condition	Judgement standard (Approx.)
A/T device harness connector (Overdrive control switch)	M58	1 - Ground	Released	Battery voltage
			Depressed	0 V

OK or NG

OK >> GO TO 10.
NG >> GO TO 8.

8. CHECK OVERDRIVE CONTROL SWITCH

1. Turn ignition switch OFF.
2. Disconnect A/T device harness connector.
3. Check continuity between A/T device harness connector terminals. Refer to AT-193, "Wiring Diagram — AT — NONDTC" .

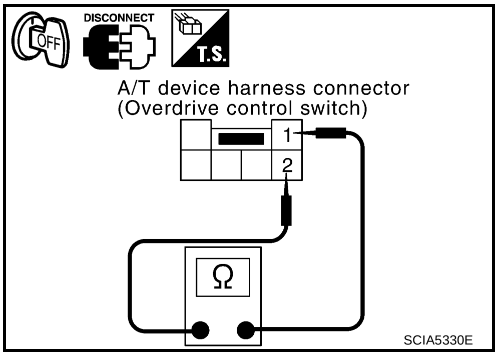

Item	Connector	Terminal	Overdrive control switch condition	Continuity
A/T device harness connector (Overdrive control switch)	M58	1 - 2	Released	No
			Depressed	Yes

OK or NG

OK >> GO TO 9.
NG >> Repair or replace damaged parts.

9. DETECT MALFUNCTIONING ITEM

Check the following.

- Harness for short or open between combination meter and A/T device harness connector
- Harness for short or open between A/T device harness connector and ground
- Combination meter. Refer to DI-4, "COMBINATION METERS" .

OK or NG

OK >> GO TO 10.
NG >> Repair or replace damaged parts.

10. CHECK CLOSED THROTTLE POSITION AND WIDE OPEN THROTTLE POSITION SIGNAL CIRCUIT

With CONSULT-II

1. Turn ignition switch ON. (Do not start engine.)
2. Select “TCM INPUT SIGNALS” in “DATA MONITOR” mode for A/T with CONSULT-II.
3. Read out “CLOSED THL/SW” and “W/O THRL/P-SW” depressing and releasing accelerator pedal. Check the signal of throttle position signal is indicated properly.

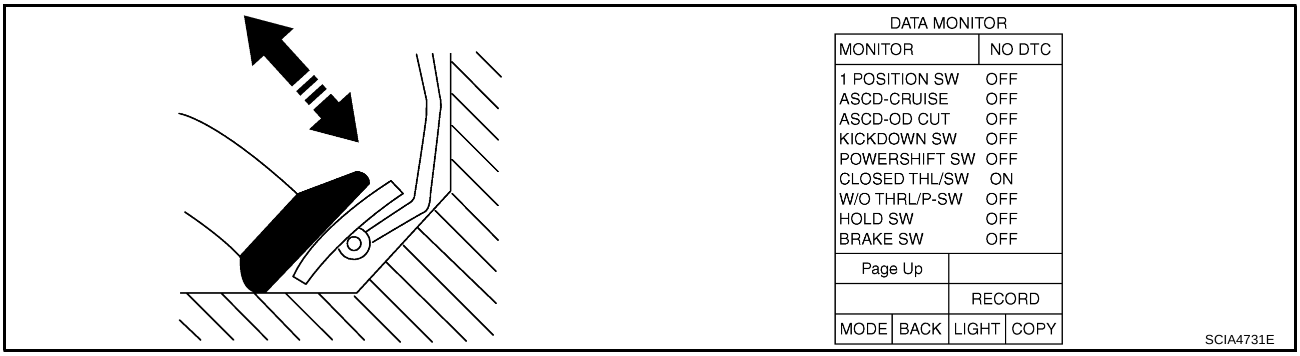

Accelerator pedal condition	Data monitor	
	CLOSED THL/SW	W/O THRL/P-SW
Released	ON	OFF
Fully depressed	OFF	ON

OK or NG

OK >> GO TO 11.
NG >> Check the following. If any items are damaged, repair or replace damaged parts.
- Accelerator pedal position sensor. Refer to AT-167, "DTC P1705 ACCELERATOR PEDAL POSITION (APP) SENSOR" .

11. PERFORM SELF-DIAGNOSIS

Without CONSULT-II
Perform self-diagnosis. Refer to AT-89, "Diagnostic Procedure Without CONSULT-II" .

OK or NG

OK >> **INSPECTION END**
NG - 1 >> Self-diagnosis does not activate: GO TO 12.
NG - 2 >> DTC is displayed: Check the malfunctioning system. Refer to AT-89, "Diagnostic Procedure Without CONSULT-II" .

12. CHECK TCM

1. Check TCM input/output signals. Refer to AT-76, "TCM Terminals and Reference Value" .
2. If NG, recheck TCM pin terminals for damage or loose connection with harness connector.

OK or NG

OK >> **INSPECTION END**
NG >> Repair or replace damaged parts.

COMPONENT INSPECTION

Overdrive Control Switch

- Check continuity between A/T device harness connector terminals.

Item	Connector	Terminal	Overdrive control switch condition	Continuity
A/T device harness connector (Overdrive control switch)	M58	1 - 2	Released	No
			Depressed	Yes

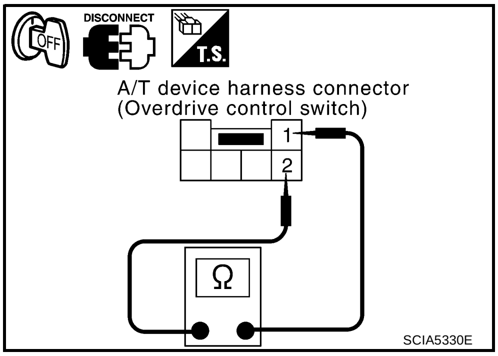

PNP Switch

1. Check continuity between PNP switch harness connector terminals.

Selector lever position	Connector	Terminal	Continuity
“P”	F24	1 - 2, 3 - 7	Yes *Continuity should not exist in positions other than the specified positions.
“R”		3 - 8	
“N”		1 - 2, 3 - 9	
“D”		3 - 6	
“2”		3 - 5	
“1”		3 - 4	

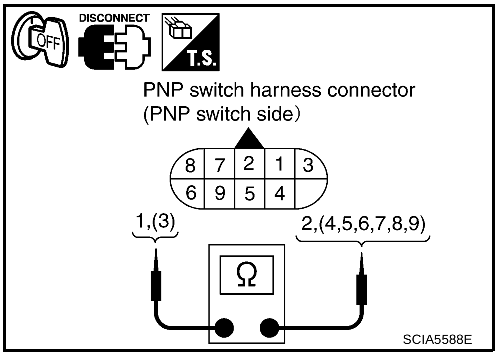

2. If NG, check again with control cable disconnected from manual shaft of A/T assembly. Refer to step 1.
3. If OK on step 2, adjust control cable. Refer to AT-243, "Adjustment of A/T Position" .
4. If NG on step 2, remove PNP switch from A/T and check continuity of PNP switch terminals. Refer to step 1.
5. If OK on step 4, adjust PNP switch. Refer to AT-254, "Park/Neutral Position (PNP) Switch" .
6. If NG on step 4, replace PNP switch.

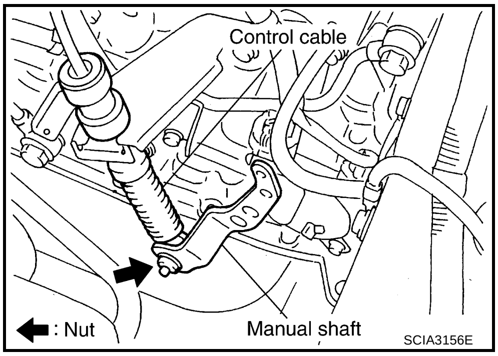

SHIFT CONTROL SYSTEM

PFP:34901

Control Device Removal and Installation

ACS007OQ

CONTROL DEVICE COMPONENTS

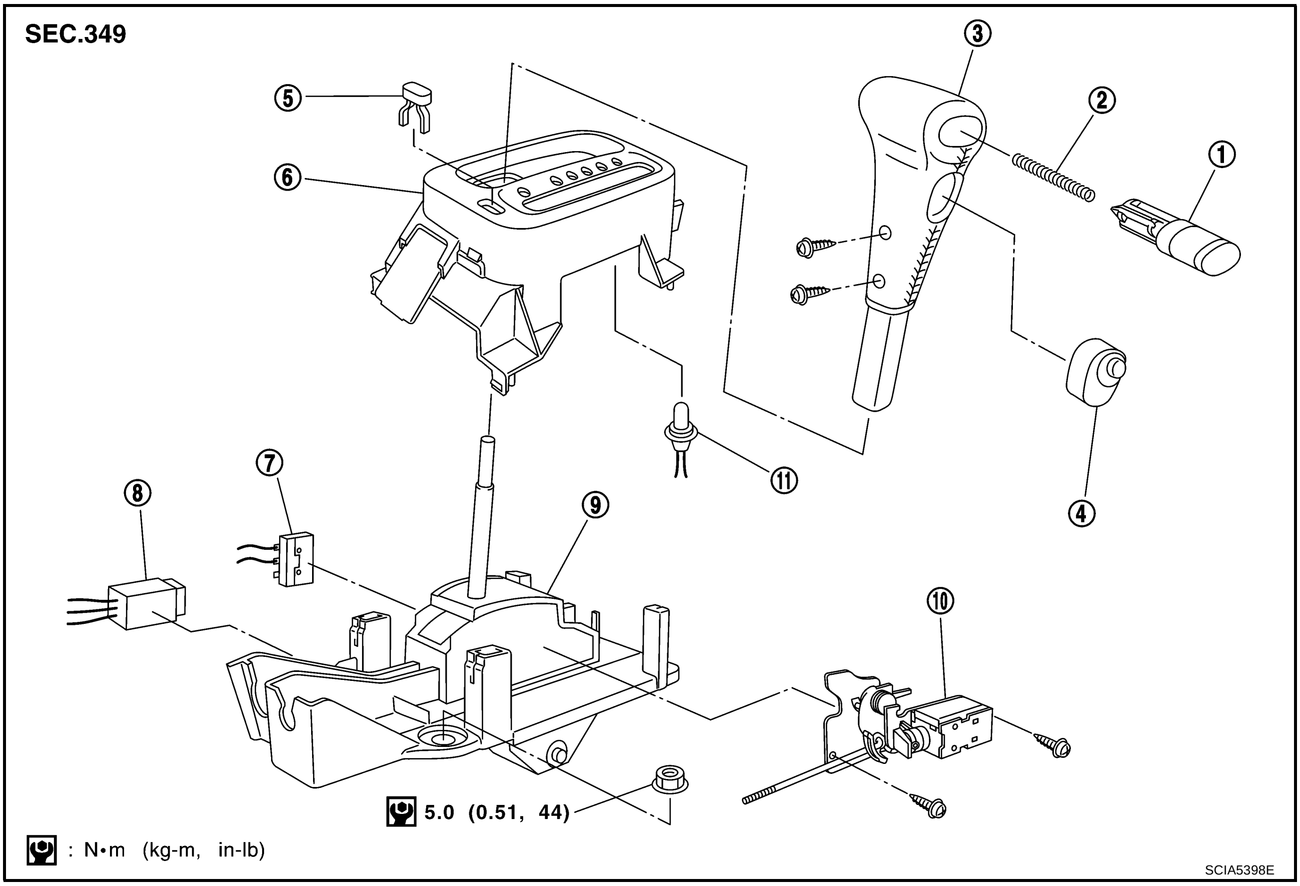

1.	Selector button	2.	Return spring	3.	Selector lever knob
4.	Overdrive control switch	5.	Shift lock release button cap	6.	Position indicator plate
7.	Park position switch	8.	A/T device harness connector	9.	Control device assembly
10.	Shift lock solenoid assembly	11.	Position lamp		

CONTROL CABLE COMPONENTS

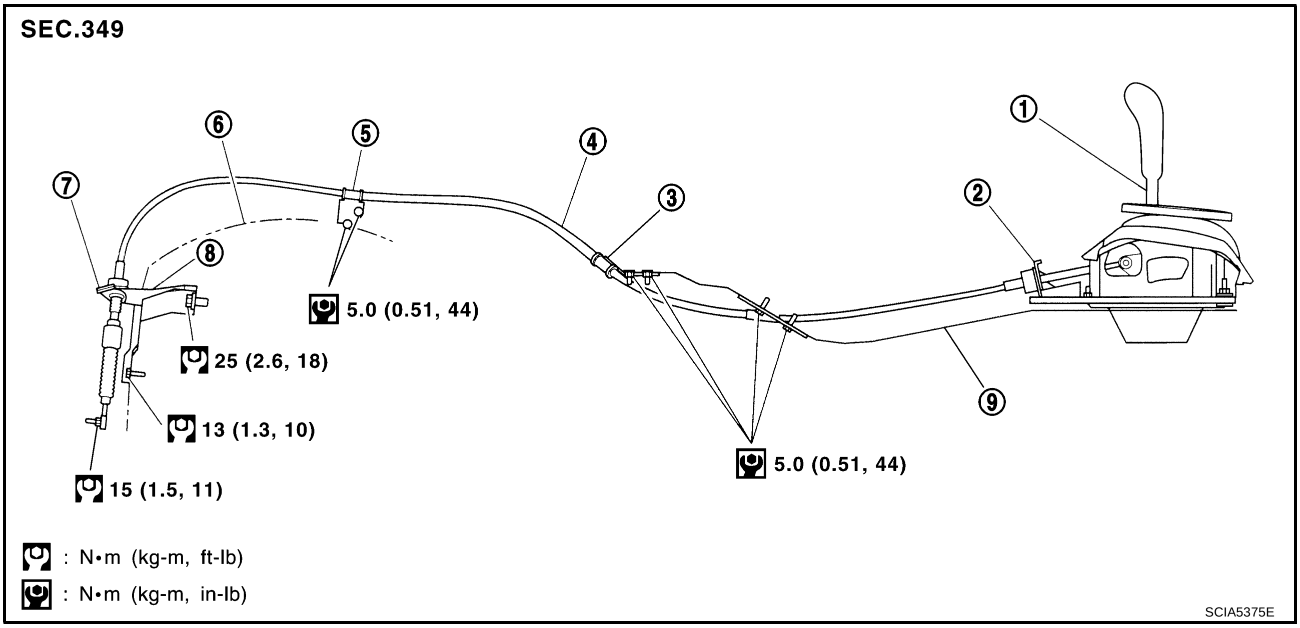

1. Control device assembly	2. Lock plate	3. Bracket
4. Control cable	5. Bracket	6. A/T assembly
7. Lock plate	8. Bracket	9. Floor panel

REMOVAL

1. Remove A/T control finisher. Refer to IP-10, "INSTRUMENT PANEL ASSEMBLY" .
2. Remove center console. Refer to IP-10, "INSTRUMENT PANEL ASSEMBLY" .
3. Remove cluster lid finisher. Refer to IP-10, "INSTRUMENT PANEL ASSEMBLY" .
4. Disconnect control cable of control device assembly.
5. Disconnect key interlock cable of control device assembly. Refer to AT-249, "KEY INTERLOCK CABLE" .
6. Disconnect A/T device harness connector.
7. Remove control device assembly from vehicle.

INSTALLATION

Note the following, and install in the reverse order of removal.

- After installation is completed, adjust and check A/T position. Refer to AT-243, "Adjustment of A/T Position" and AT-244, "Checking of A/T Position" .

Adjustment of A/T Position

ACS007OR

Move selector lever from “P” position to “1” position. You should be able to feel the detents in each position. If the detents cannot be felt or if the pointer indicating the position is improperly aligned, the control cable needs adjustment.

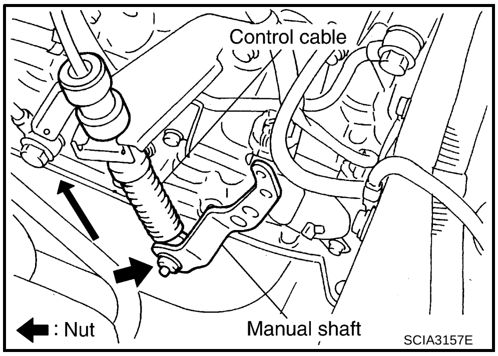

1. Place selector lever in “P” position.
2. Loosen control cable lock nut and place manual shaft in “P” position.

   CAUTION:
   Turn wheels more than 1/4 rotations and apply the park lock.
3. After pushing the control cable with the specified force, move your hands off the control cable.

   Specified force: 9.8 N (1.0 kg, 2.2 lb)
4. Connect control cable on manual shaft.

   CAUTION:
   No application of a force to the manual shaft.

5. Tighten control cable lock nut.
6. Move selector lever from “P” to “1” position again. Make sure that selector lever moves smoothly.
7. Apply grease to contacting areas of selector lever and control cable. Install any part removed.

Checking of A/T Position

ACS007OS

1. Place selector lever in “P” position, and turn ignition switch ON (engine stop).
2. Make sure selector lever can be shifted to other than “P” position when brake pedal is depressed. Also make sure selector lever can be shifted from “P” position only when brake pedal is depressed.
3. Move selector lever and check for excessive effort, sticking, noise or rattle.
4. Confirm selector lever stops at each position with the feel of engagement when it is moved through all the positions. Check whether or not the actual position selector lever is in matches the position shown by the shift position indicator and transaxle body.
5. The method of operating selector lever to individual positions correctly should be as shown in the figure.
6. Confirm back-up lamps illuminate only when lever is placed in “R” position. Confirm back-up lamps do not illuminate when selector lever is in “P” or “N” position with selector lever pushed against “R” position.
7. Confirm engine can only be started with selector lever in “P” and “N” positions.
8. Make sure A/T is locked completely in “P” position.

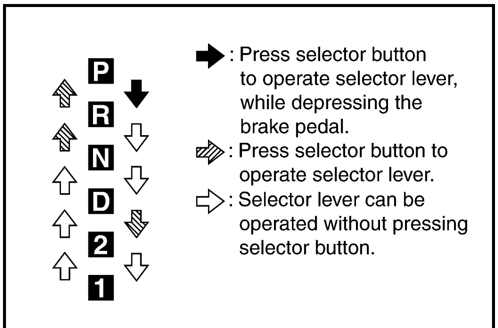

SCIA5443E

A/T SHIFT LOCK SYSTEM

PFP:34950

Description

ACS007UU

- The mechanical key interlock mechanism also operates as a shift lock:
  With the key switch turned to ON, the selector lever cannot be shifted from “P” (parking) to any other position unless the brake pedal is depressed.
  With the key removed, the selector lever cannot be shifted from “P” to any other position.
  The key cannot be removed unless the selector lever is placed in “P”.
- The shift lock and key interlock mechanisms are controlled by the ON-OFF operation of the shift lock solenoid and by the operation of the rotator and slider located inside the key cylinder.

Shift Lock System Electrical Parts Location

ACS007UV

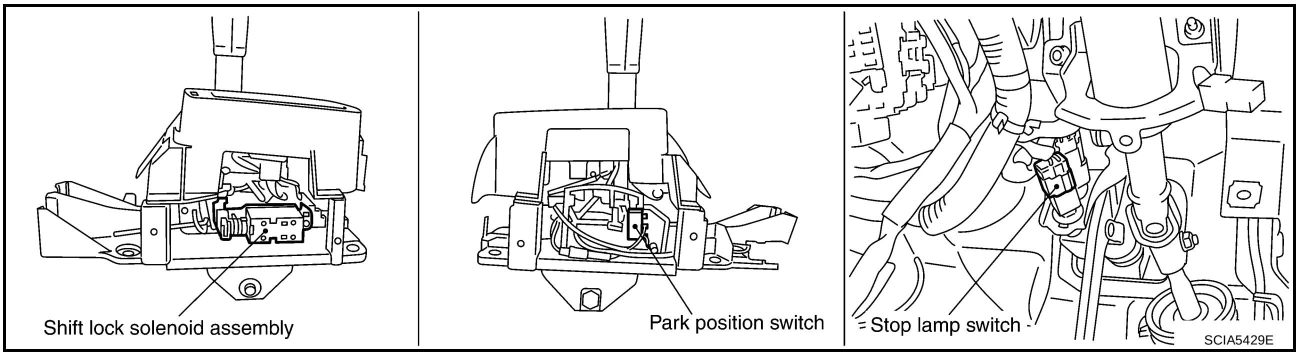

A
B
AT
D
E
F
G
H
I
J
K
L
M

Wiring Diagram — AT — SHIFT

ACS007UW

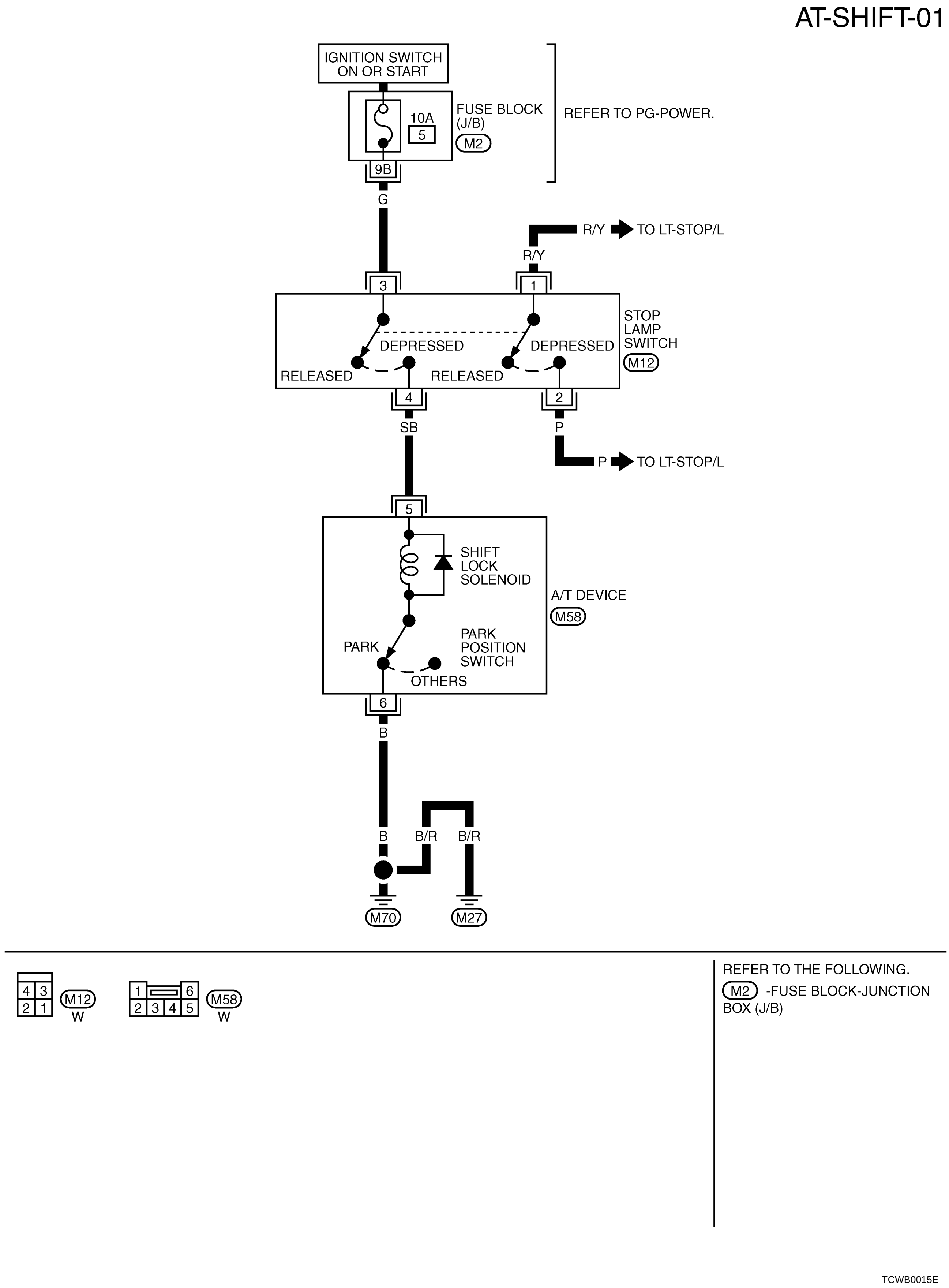

Diagnostic Procedure

ACS007UX

SYMPTOM 1:

- **Selector lever cannot be moved from “P” position with key in ON position and brake pedal applied.**
- **Selector lever can be moved from “P” position with key in ON position and brake pedal released.**
- **Selector lever can be moved from “P” position when key is removed from key cylinder.**

SYMPTOM 2:

- **Ignition key cannot be removed when selector lever is set to “P” position.**
- **Ignition key can be removed when selector lever is set to any position except “P”.**

1. CHECK KEY INTERLOCK CABLE

Check key interlock cable for damage.

OK or NG

OK >> GO TO 2.
NG >> Repair key interlock cable. Refer to AT-249, "KEY INTERLOCK CABLE" .

2. CHECK A/T POSITION

Check A/T position. Refer to AT-244, "Checking of A/T Position" .

OK or NG

OK >> GO TO 3.
NG >> Adjust control cable. Refer to AT-243, "Adjustment of A/T Position" .

3. CHECK SHIFT LOCK SOLENOID AND PARK POSITION SWITCH

1. Turn ignition switch ON. (Do not start engine.)
2. Selector lever is set in “P” position.
3. Check operation sound.

Condition	Brake pedal	Operation sound
When ignition switch is turned ON position and selector lever is set in “P” position.	Depressed	Yes
	Released	No

OK or NG

OK >> **INSPECTION END**
NG >> GO TO 4.

4. CHECK POWER SOURCE

1. Turn ignition switch ON. (Do not start engine.)
2. Check voltage between A/T device harness connector terminal and ground.

Voltage:

Brake pedal depressed: Battery voltage
Brake pedal released: 0 V

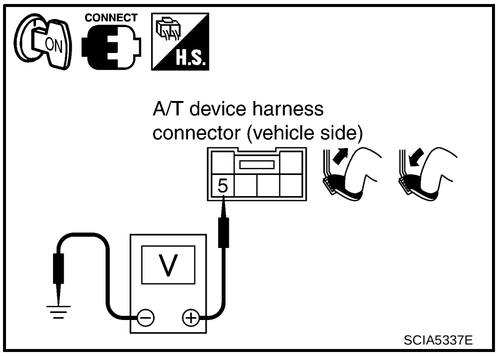

OK or NG

OK >> GO TO 7.
NG >> GO TO 5.

5. CHECK STOP LAMP SWITCH

1. Turn ignition switch OFF.
2. Disconnect stop lamp switch harness connector.
3. Check continuity between stop lamp switch harness connector terminals.

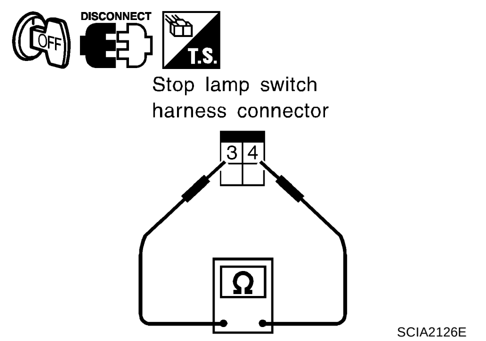

SCIA2126E

Condition	Continuity
When brake pedal is depressed	Yes
When brake pedal is released	No

Check stop lamp switch after adjusting brake pedal — refer to BR-6, "BRAKE PEDAL" .

OK or NG

OK >> GO TO 6.
NG >> Repair or replace damaged parts.

6. DETECT MALFUNCTIONING ITEM

Check the following. If any items are damaged, repair or replace damaged parts.

1. Harness for short or open between ignition switch and stop lamp switch harness connector
2. Harness for short or open between stop lamp switch harness connector and A/T device harness connector
3. 10 A fuse [No.5, located in the fuse block (J/B)]
4. Ignition switch. Refer to PG-2, "POWER SUPPLY ROUTING" .

OK or NG

OK >> **INSPECTION END**
NG >> Repair or replace damaged parts.

7. CHECK GROUND CIRCUIT

1. Turn ignition switch OFF.
2. Disconnect A/T device harness connector.
3. Check continuity between A/T device harness connector terminal and ground.

Continuity should exist.

4. Connect A/T device harness connector.

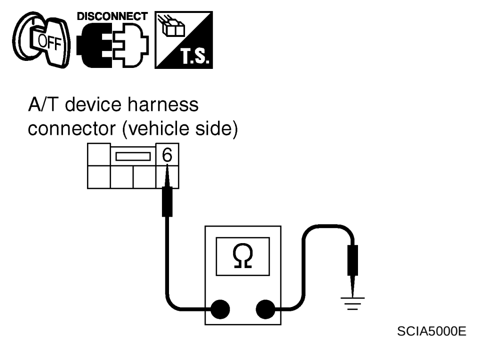

SCIA5000E

OK or NG

OK >> Replace shift lock solenoid or park position switch.
NG >> Repair open circuit or short to ground or short to power in harness or connectors.

KEY INTERLOCK CABLE

PFP:34908

Components

ACS007UY

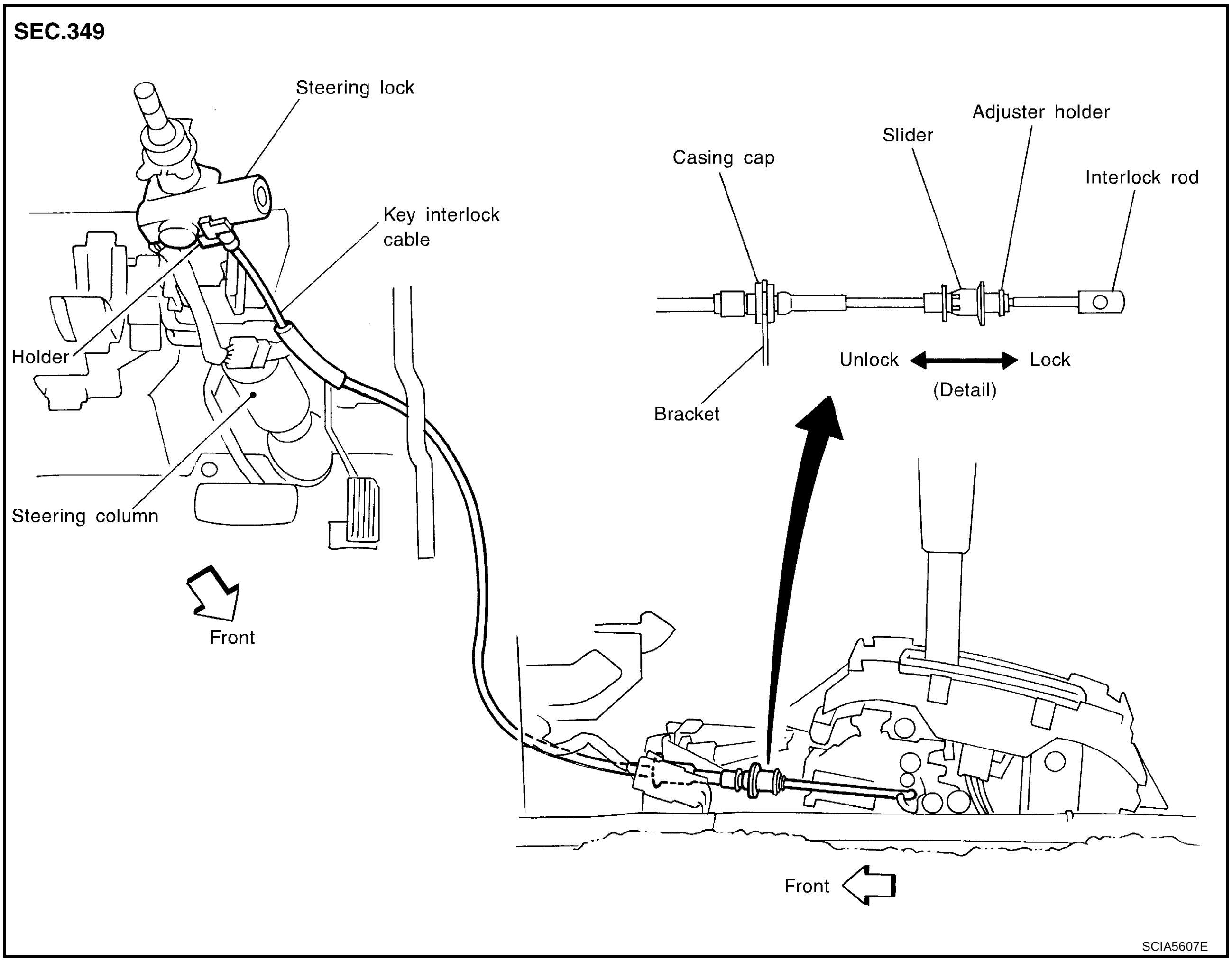

CAUTION:

- **Install key interlock cable in such a way that it will not be damaged by sharp bends, twists or interference with adjacent parts.**
- **After installing key interlock cable to control device, make sure that casing cap and bracket are firmly secured in their positions.**

Removal

ACS007UZ

1. Unlock slider by squeezing lock tabs on slider from adjuster holder and remove interlock rod from key interlock cable.

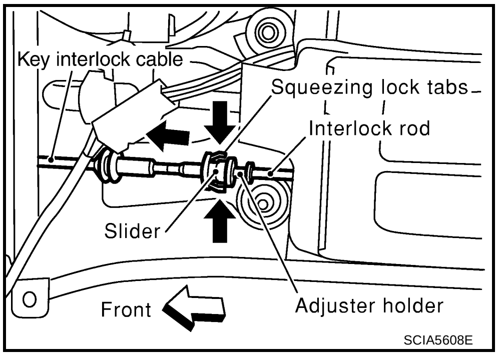

2. Remove lock plate from steering lock assembly and remove key interlock cable.

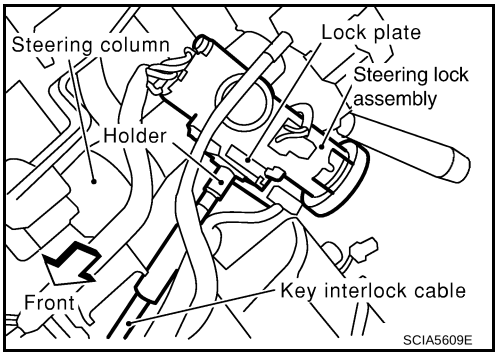

Installation

ACS007V0

1. Turn ignition switch to lock position.
2. Set selector lever to “P” position.
3. Set key interlock cable to steering lock assembly and install lock plate.
4. Clamp key interlock cable to steering column and fix to key interlock cable with band.

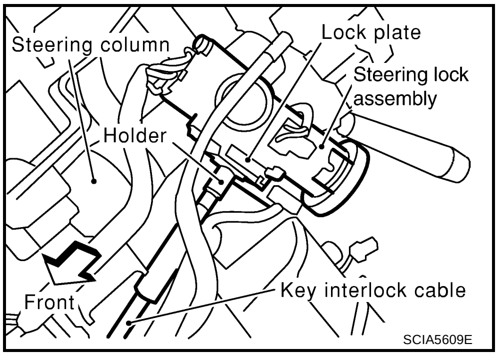

5. Insert interlock rod into adjuster holder.

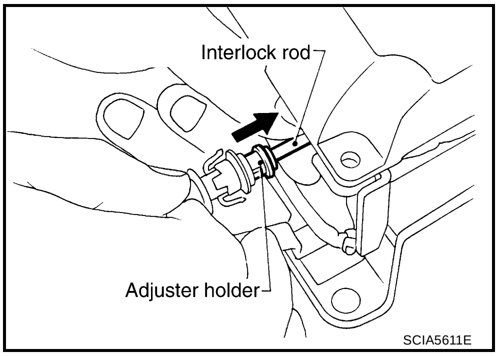

6. Install casing cap to bracket.
7. Move slider in order to fix adjuster holder to interlock rod.

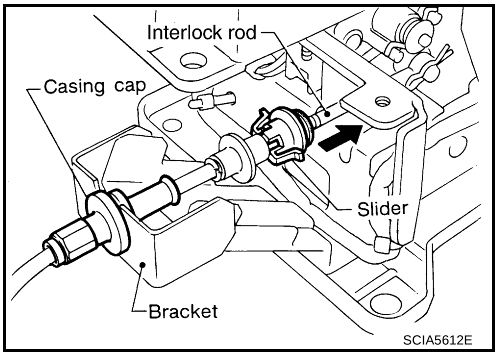

ON-VEHICLE SERVICE

PFP:00000

Control Valve Assembly and Accumulators

ACS007V1

COMPONENTS

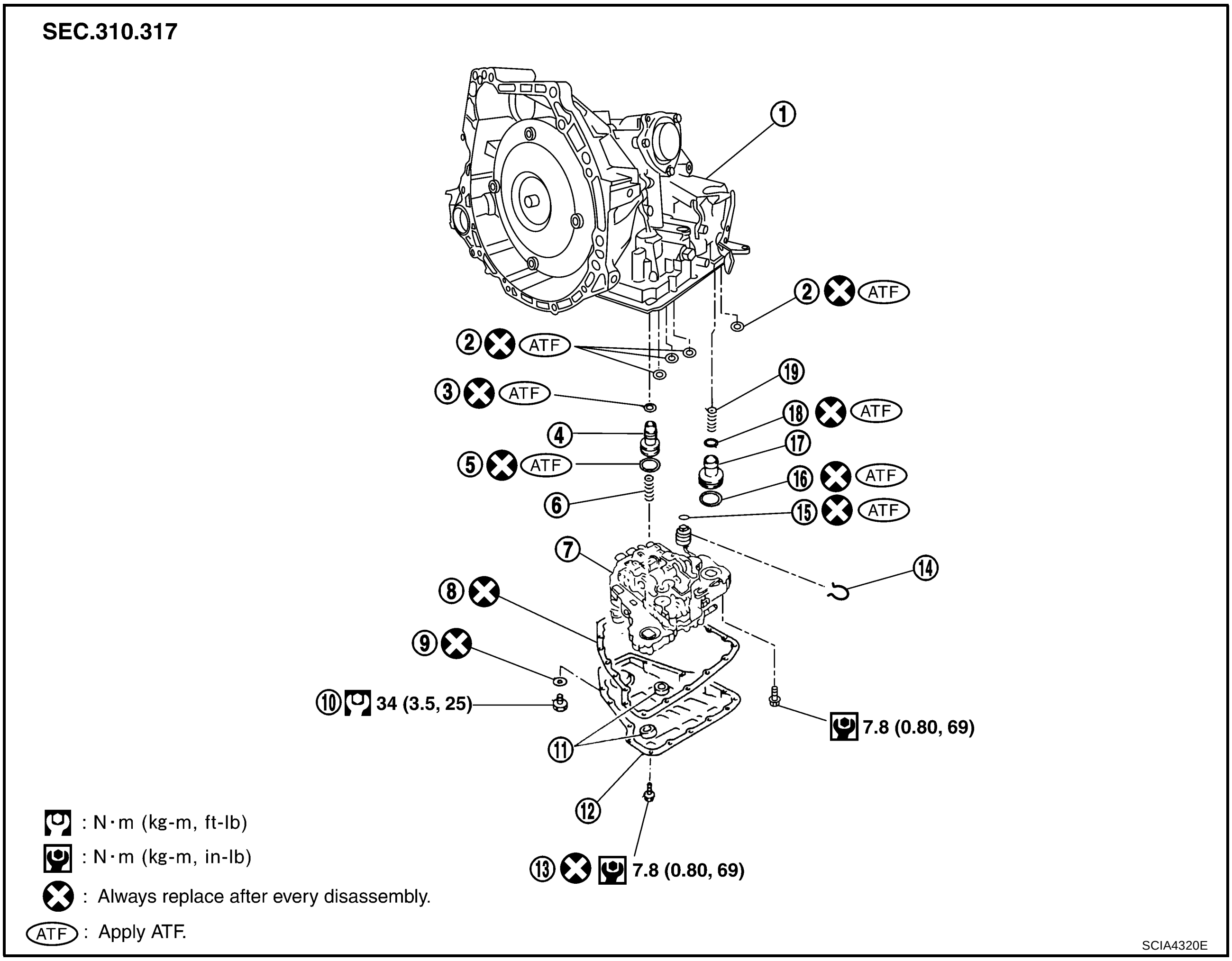

1. A/T	2. Lip seal	3. O-ring
4. Servo release accumulator piston	5. O-ring	6. Return spring
7. Control valve assembly	8. Oil pan gasket	9. Drain plug gasket
10. Drain plug	11. Magnet	12. Oil pan
13. Oil pan fitting bolt	14. Snap ring	15. O-ring
16. O-ring	17. N-D accumulator piston	18. O-ring
19. Return spring		

REMOVAL AND INSTALLATION

Removal

1. Disconnect the battery cable from the negative terminal.
2. Drain ATF from drain hole. Refer to AT-17, "Changing A/T Fluid" .
3. Remove oil pan and oil pan gasket.

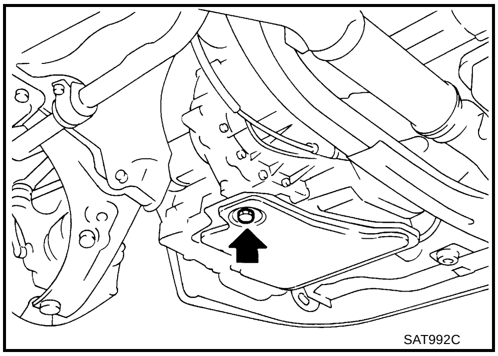

4. Disconnect terminal cord assembly harness connector.
5. Remove snap ring from terminal body.
   CAUTION:
   Do not expand snap ring excessively.

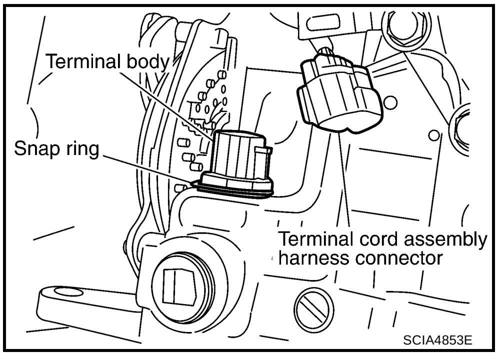

SCIA4853E

6. Remove terminal cord assembly by pushing terminal body into transaxle case.

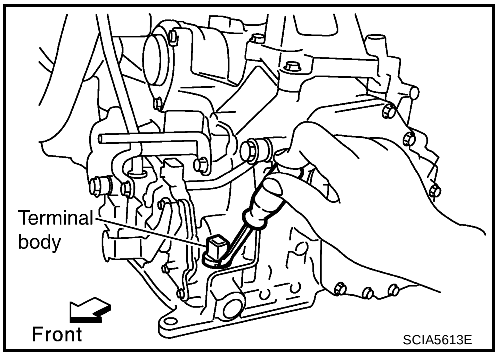

SCIA5613E

7. Remove control valve assembly fixing bolts **A, B** and **C** .
   Bolt length, number and location:

Bolt symbol	A	B	C
Bolt length " ℓ " mm (in)	40.0 (1.575)	33.0 (1.299)	43.5 (1.713)
Number of bolts	5	6	2

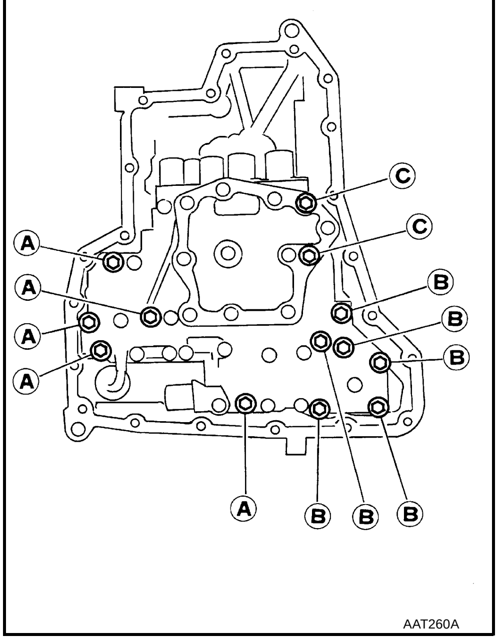

AAT260A

8. Remove control valve assembly from transaxle case.
   CAUTION:
   Be careful not to drop manual valve and servo release accumulator return spring.

A B AT D E F G H I J K L M

9. Remove manual valve from control valve assembly.

   CAUTION:
   Be careful not to drop manual valve.
10. Remove O-ring from terminal body.
11. Disassemble and inspect control valve assembly if necessary. Refer to AT-295, "Control Valve Assembly" , AT-304, "Control Valve Upper Body" and AT-308, "Control Valve Lower Body" .

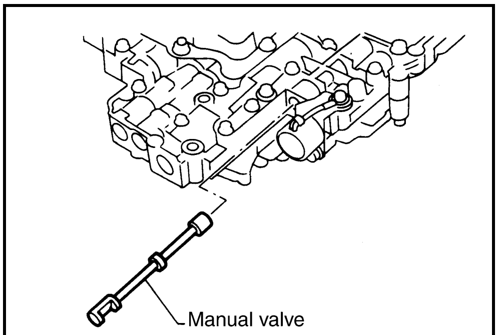

SCIA3150E

12. Remove servo release accumulator piston and N-D accumulator piston by applying compressed air if necessary.

    CAUTION:
    Hold each piston with a lint-free paper.

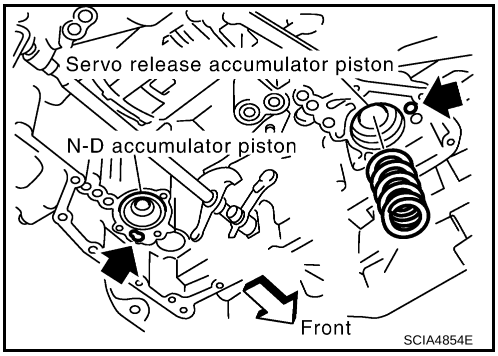

SCIA4854E

a. Blow air into the oil hole as shown in the figure, and remove servo release accumulator piston from transaxle case.

   CAUTION:
   - **Strong flow of air will push the accumulator piston out along with a splash of oil. Cover the area with lint-free papers and blow air little by little to avoid this.**
   - **Wrap the removed accumulator piston in a lint-free paper.**

b. Remove O-rings from servo release accumulator piston.

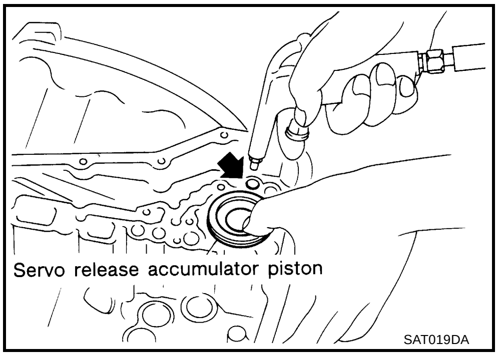

SAT019DA

c. Blow air into the oil hole shown in the figure, and remove N-D accumulator piston and return spring from transaxle case.

   CAUTION:
   - **Strong flow of air will push the accumulator piston out along with a splash of oil. Cover the area with lint-free papers and blow air little by little to avoid this.**
   - **Wrap the removed accumulator piston in a lint-free paper.**

d. Remove O-rings from N-D accumulator piston.

13. Remove lip seals from oil groove for band servo.
14. Remove magnets from oil pan.

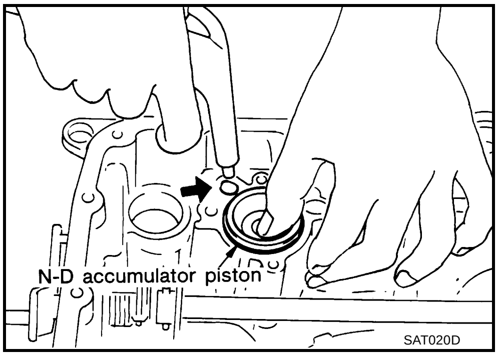

SAT020D

Installation

- **Note the following, and install in the reverse order of removal.**
- **Set manual shaft in “N” position, then align manual plate with groove in manual valve.**
- **After installing control valve assembly to transaxle case, make sure that selector lever can be moved to all positions.**
- **After completing installation, check for A/T fluid leakage, and fluid level. Refer to** **AT-16, "Checking A/T Fluid"**.

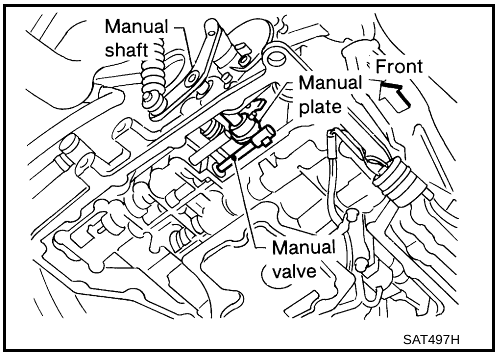

CAUTION:

- **Do not reuse O-rings and lip seals.**
- **Do not reuse oil pan gasket and oil pan fitting bolts.**
- **Do not reuse drain plug gasket.**
- **Apply ATF to manual valve, O-rings, lip seals and sliding surfaces transaxle case.**
- **Completely remove all moisture, oil and old gasket, etc. from oil pan gasket mounting surface.**

Park/Neutral Position (PNP) Switch

ACS007V2

COMPONENTS

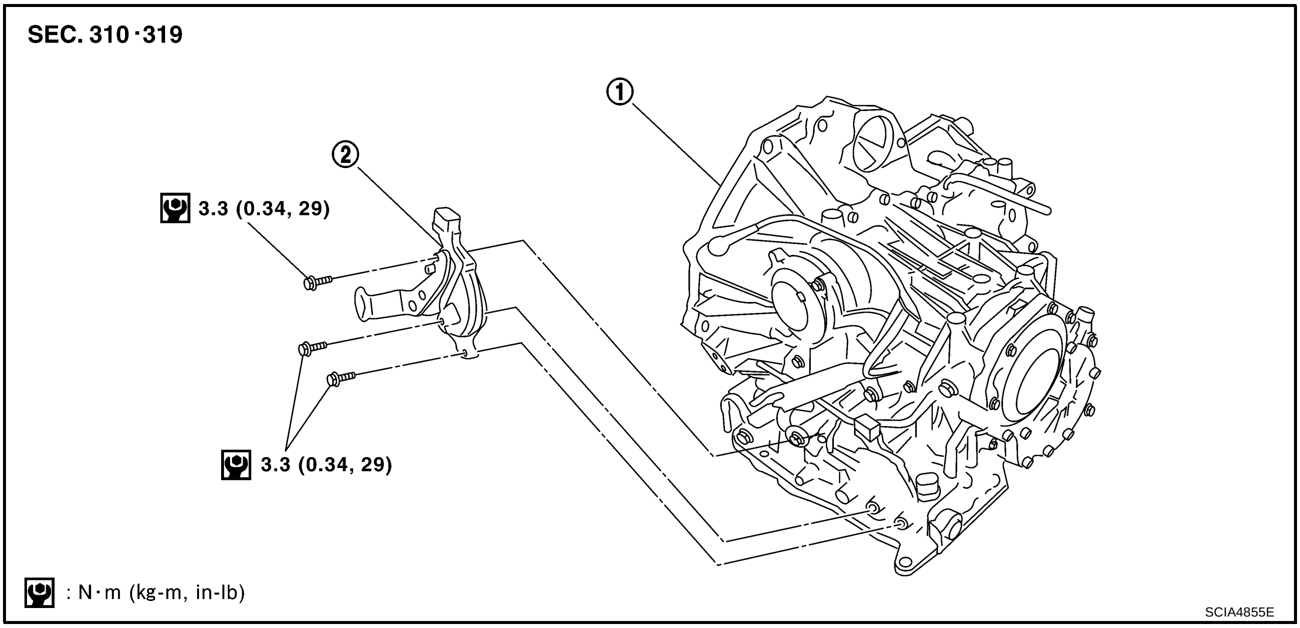

1. A/T assembly
2. PNP switch

REMOVAL AND INSTALLATION

Removal

1. Disconnect the battery cable from the negative terminal.
2. Set selector lever in “N” position.
3. Remove engine under cover.
4. Remove control cable end from manual shaft.
5. Disconnect PNP switch harness connector.

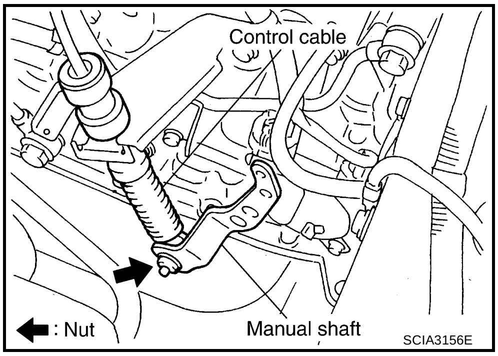

6. Remove PNP switch fitting bolts.
7. Remove PNP switch from A/T assembly.

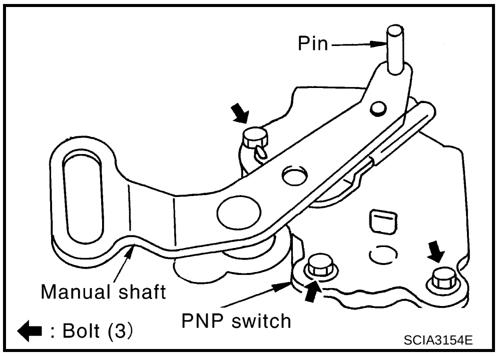

Installation

Note the following, and install in the reverse order of removal.

- Align PNP switch position when installing.
- After installation is completed, adjust and check A/T position. Refer to AT-243, "Adjustment of A/T Position" , AT-244, "Checking of A/T Position" .
- After installation is completed, check continuity of PNP switch. Refer to AT-240, "PNP Switch" .

PARK/NEUTRAL POSITION (PNP) SWITCH ADJUSTMENT

1. Set selector lever and manual shaft in “N” position.
2. Remove control cable end from manual shaft.

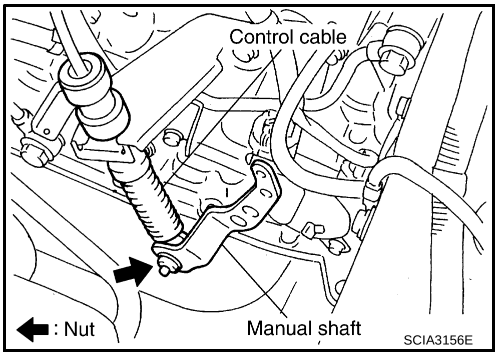

3. Loosen PNP switch fitting bolts.
4. Use a 3 mm (0.12 in) pin for this adjustment.
a. Insert the pin straight into the manual shaft adjustment hole.
b. Rotate PNP switch until the pin can also be inserted straight into the hole in PNP switch.
5. Tighten PNP switch fixing bolts.
6. Remove pin from adjustment hole after adjusting PNP switch.
7. Reinstall any part removed.
8. Adjust control cable. Refer to AT-243, "Adjustment of A/T Position" .
9. Check continuity of PNP switch. Refer to AT-240, "PNP Switch" .

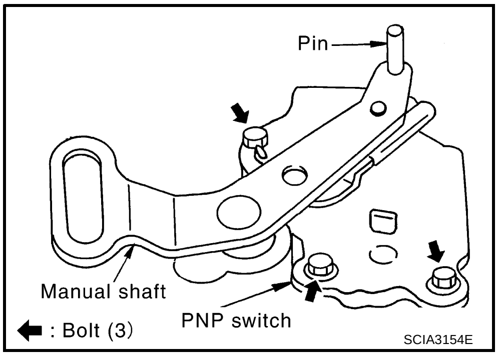

Differential Side Oil Seal Replacement

ACS007V3

COMPONENTS

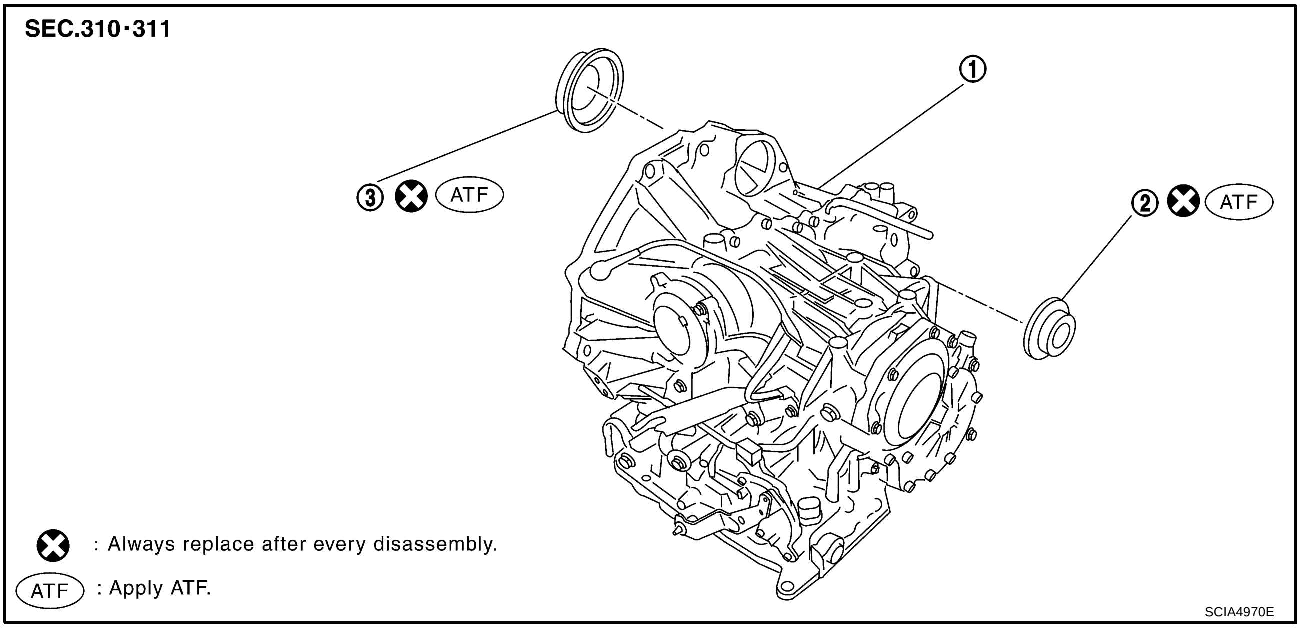

1. A/T assembly
2. LH differential side oil seal
3. RH differential side oil seal

REMOVAL AND INSTALLATION

Removal

1. Remove exhaust front tube. Refer to EX-3, "Removal and Installation" .
2. Remove front drive shaft. Refer to FAX-13, "FRONT DRIVE SHAFT" .
3. Remove transfer assembly from right side of transaxle (For AWD models). Refer to TF-48, "Removal and Installation" .
4. Remove differential side oil seal using a flat-bladed screwdriver.

   CAUTION:

   Be careful not to scratch transaxle case or converter housing.

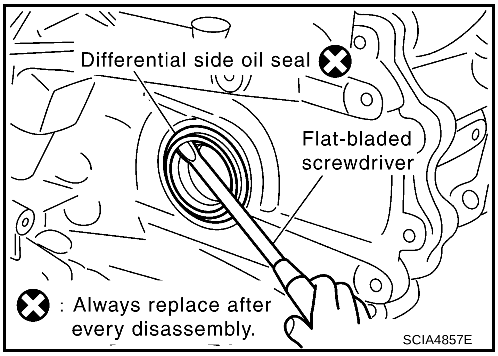

Installation

1. Drive the differential side oil seals into the case until it become flush using the drift below. Refer to dimensions A and B.

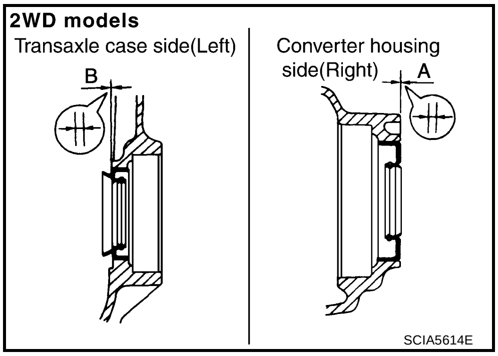

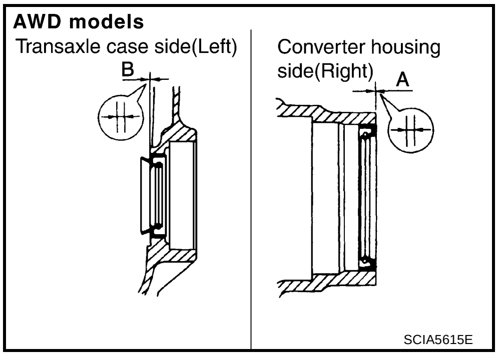

Unit: mm (in)

Dimensions A, B	0 ± 0.5 (0 ± 0.020)

NOTE:
The differential side oil seal pulling direction is used as the reference.

Drift to be used:

Location	2WD models	AWD models
Transaxle case side (Left) Tool number (Kent-Moore No.)	ST33400001 (J-26082)	ST33400001 (J-26082)
Converter housing side (Right) Tool number (Kent-Moore No.)	ST33400001 (J-26082)	KV40100621 (J-25273)

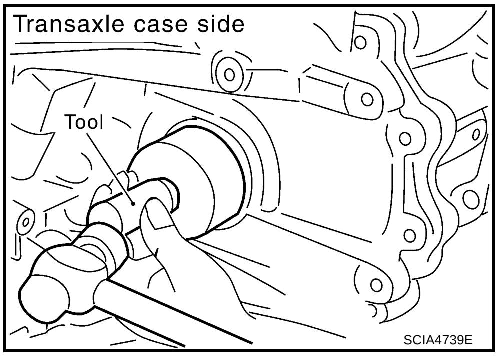

CAUTION:
- **Apply ATF to differential side oil seals.**
- **Do not reuse differential side oil seals.**

2. Reinstall any part removed.

CAUTION:
If lubricant leak has occurred, after finishing work, check A/T fluid level and fluid leakage. Refer to AT-16, "Checking A/T Fluid" .

Revolution Sensor Replacement

ACS007V4

COMPONENTS

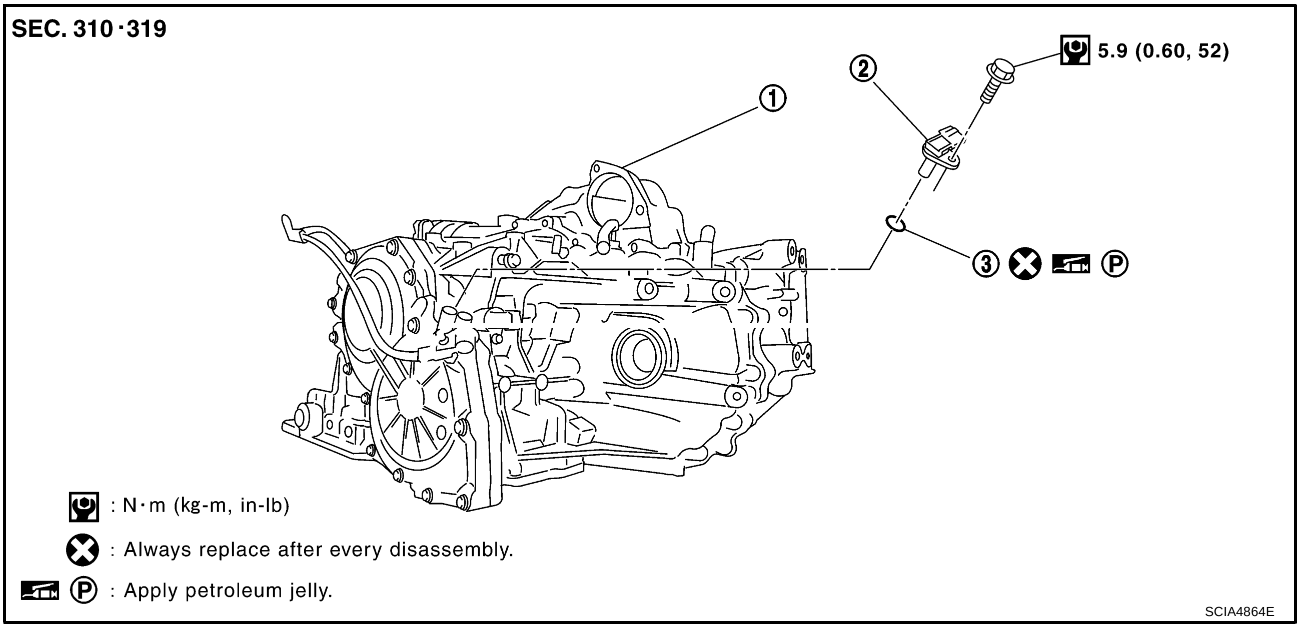

1.	A/T assembly	2.	Revolution sensor	3.	O-ring

REMOVAL AND INSTALLATION

Removal

1. Disconnect the battery cable from the negative terminal.
2. Remove front tire LH from vehicle with power tool.
3. Disconnect revolution sensor harness connector.
4. Remove revolution sensor from A/T assembly.
5. Remove O-ring from revolution sensor.

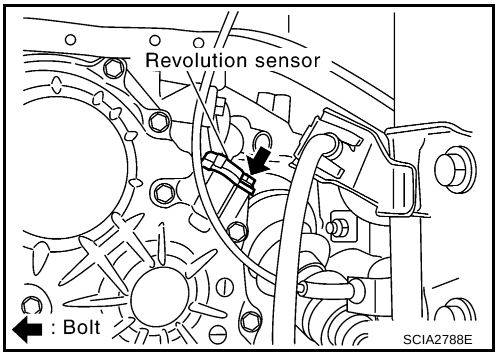

Installation

Note the following, and install in the reverse order of removal.

CAUTION:

- **Do not reuse O-ring.**
- **Apply petroleum jelly to O-ring.**

AIR BREATHER HOSE

PFP:31098

Removal and Installation

ACS007ZW

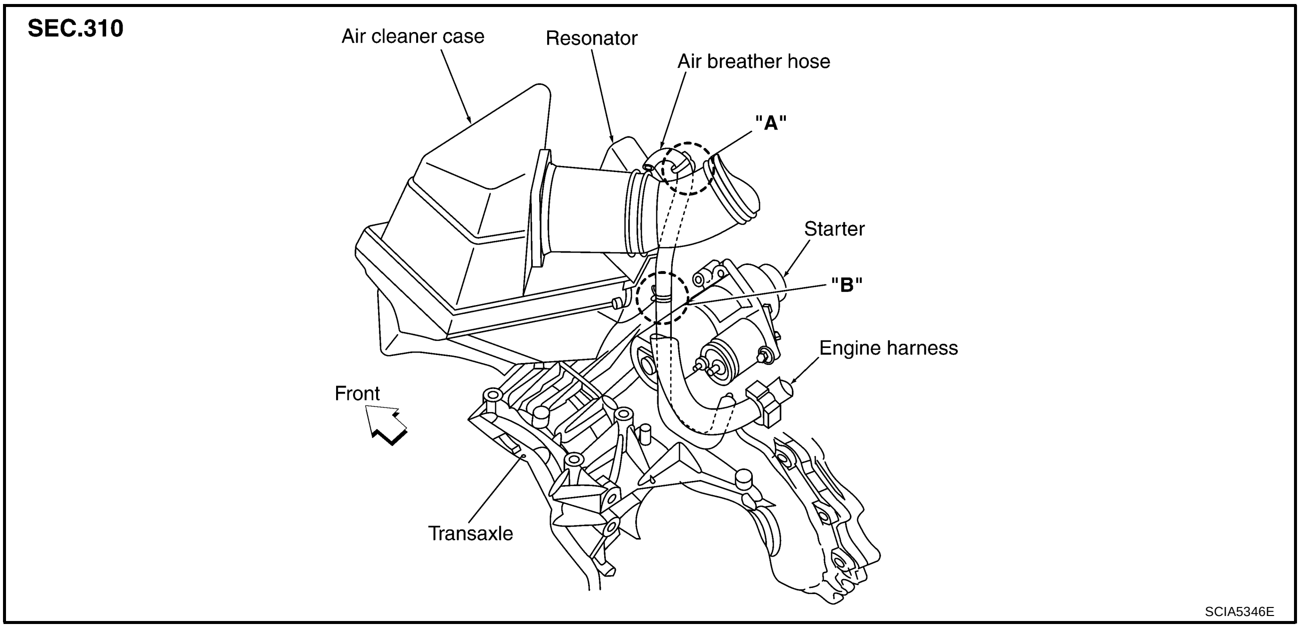

During removal and installation of air breather hose be careful of the following.

- Secure a mark “A” when installing air breather hose to resonator.

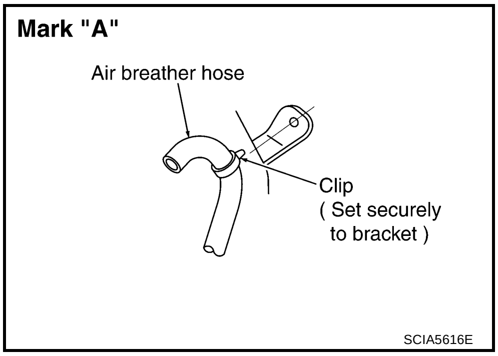

- Secure a mark “B” when installing air breather hose to air cleaner case.

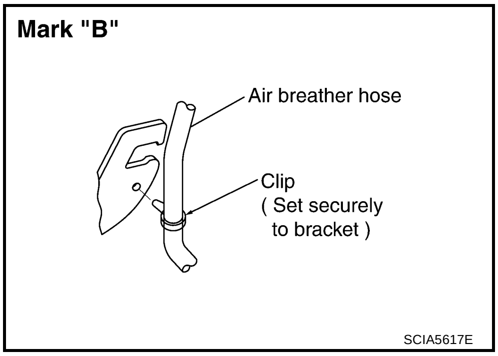

CAUTION:

- **When installing an air breather hose, be careful not to be crushed or blocked by folding or bending the hose.**
- **When inserting a hose to the transaxle tube, be sure to insert it fully until its end reaches the tube bend R portion.**
- **When inserting a hose to the air breather tube, be sure to insert it fully until its end reaches the tube spool portion.**

TRANSAXLE ASSEMBLY

PFP:32020

Removal and Installation

ACS007V5

COMPONENTS

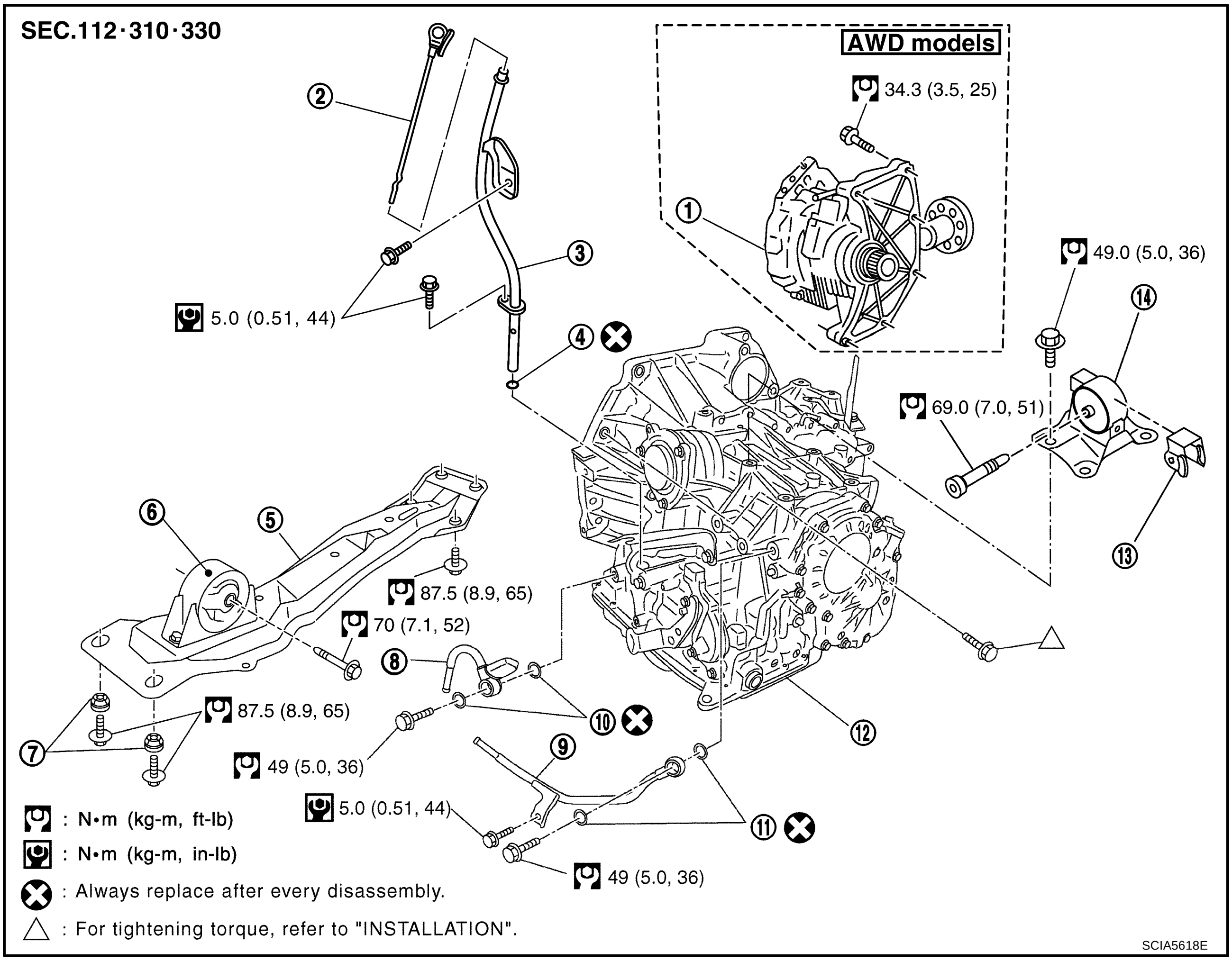

1. Transfer assembly	2. A/T fluid level gauge	3. A/T fluid charging pipe
4. O-ring	5. Center member	6. Front engine mounting insulator
7. Grommet	8. Fluid cooler tube	9. Fluid cooler tube
10. Copper washer	11. Copper washer	12. A/T assembly
13. Stopper	14. LH engine mounting insulator	

REMOVAL

CAUTION:

Before separating transaxle from engine, remove the crankshaft position sensor (POS) from cylinder block. Be careful not to damage sensor.

1. Remove battery and bracket, air cleaner and air duct.
2. Remove air breather hose. Refer to AT-259, "Removal and Installation" .
3. Disconnect terminal cord assembly harness connector, PNP switch harness connector and revolution sensor harness connector.
4. Remove crankshaft position sensor (POS) from cylinder block. Refer to EM-82, "Disassembly and Assembly" .

   CAUTION:

   - **Do not subject it to impact by dropping or hitting it.**
   - **Do not disassemble.**
   - **Do not allow metal filings, etc., to get on the sensor's front edge magnetic area.**
   - **Do not place in an area affected by magnetism.**

5. Disconnect control cable from A/T assembly. Refer to AT-243, "CONTROL CABLE COMPONENTS" .
6. Remove exhaust front tube. Refer to EX-3, "Removal and Installation" .
7. Disconnect A/T fluid cooler hoses.
8. Remove front drive shaft. Refer to FAX-13, "FRONT DRIVE SHAFT" .
9. Remove transfer assembly. (For AWD models) Refer to TF-48, "Removal and Installation" .
10. Remove starter motor with power tool. Refer to SC-16, "Removal and Installation" .
11. Support A/T assembly with a transmission jack.
12. Remove center member, front engine mounting insulator and LH engine mounting insulator with power tool.
13. Remove suspension member. Refer to FSU-17, "Removal and Installation" .

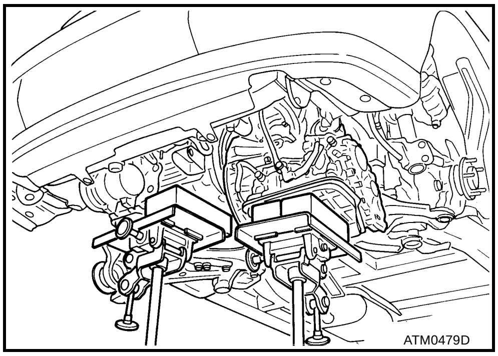

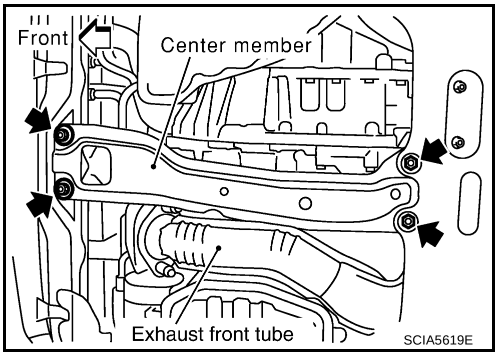

14. Remove rear plate cover. Refer to EM-22, "OIL PAN AND OIL STRAINER" .
    Rotate crankshaft to gain access to securing bolts.
15. Remove securing bolts between drive plate and torque converter. When turning crankshaft, turn it clockwise as viewed from the front of engine.
16. Support engine assembly with a transmission jack.
17. Remove bolts fixing A/T assembly to engine assembly.
18. Lower A/T assembly while supporting it with a transmission jack.
19. Remove A/T fluid level gauge from A/T fluid charging pipe.
20. Remove A/T fluid charging pipe from A/T assembly.
21. Remove O-ring from A/T fluid charging pipe.

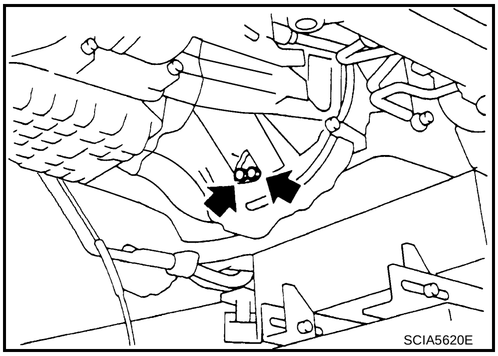

INSPECTION

Installation and Inspection of Torque Converter

- After inserting a torque converter to a A/T, be sure to check distance “A” to ensure it is within the reference value limit.

  Distance “A”: 14 mm (0.55 in) or more

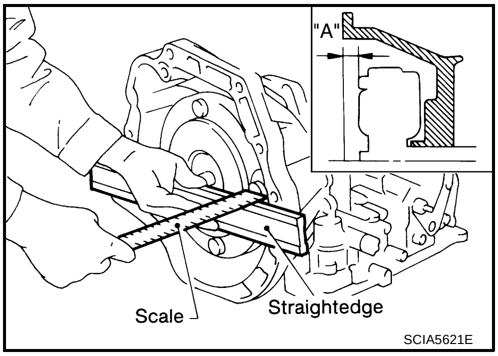

INSTALLATION

Install the removed parts in the reverse order of the removal, while paying attention to the following work.

- When installing A/T assembly to engine assembly, attach the fixing bolts in accordance with the following table.

2WD models

Bolt No.	1	2	3	4	5
Number of bolts	4	2	2	1	1
Bolt length "ℓ"mm (in)	49 (1.93)	40 (1.57)	30 (1.18)	40 (1.57)	45 (1.77)
Tightening torque N·m (kg-m, ft-lb)	75 (7.7,55)	42.7(4.4,31)		35(3.6,26)	

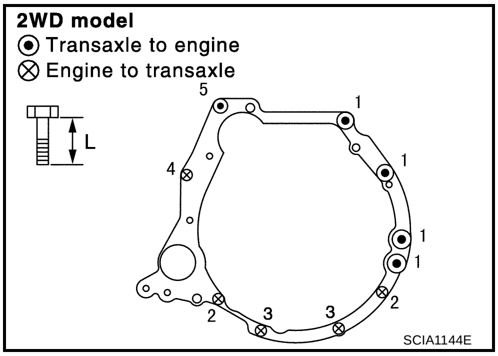

AWD models

Bolt No.	1	2	3	4	5	6
Number of bolts	4	1	2	2	1	1
Bolt length "ℓ"mm (in)	49 (1.93)	45 (1.77)	40 (1.57)	30 (1.18)	40 (1.57)	45 (1.77)
Tightening torque N·m (kg-m, ft-lb)	75 (7.7,55)		42.7(4.4,31)		35(3.6,26)	

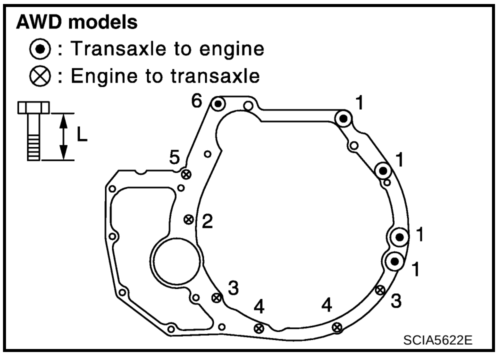

- Align the positions of tightening bolts for drive plate with those of torque converter, and temporarily tighten bolts. Then, tighten the bolts to the specified torque.

  : 52 N·m (5.3 kg-m, 38 ft-lb)

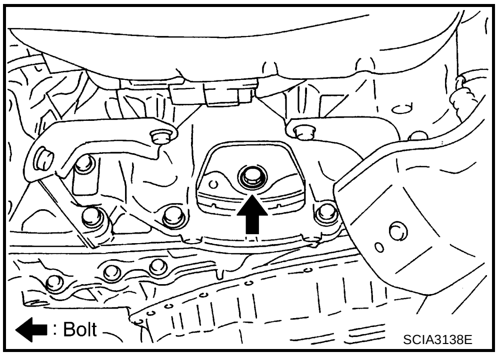

CAUTION:

- **When turning crankshaft, turn it clockwise as viewed from the front of engine.**
- **When tightening the tightening bolts for torque converter after fixing crankshaft pulley bolts, be sure to confirm the tightening torque of crankshaft pulley mounting bolts.**
- **After converter is installed to drive plate, rotate crankshaft several turns and make sure that transaxle rotates freely without binding.**

- After completing installation, check for A/T fluid leakage, A/T fluid level, and the positions of A/T. Refer to AT-16, "Checking A/T Fluid" , AT-243, "Adjustment of A/T Position" .

OVERHAUL

PFP:00000

Components

ACS007V7

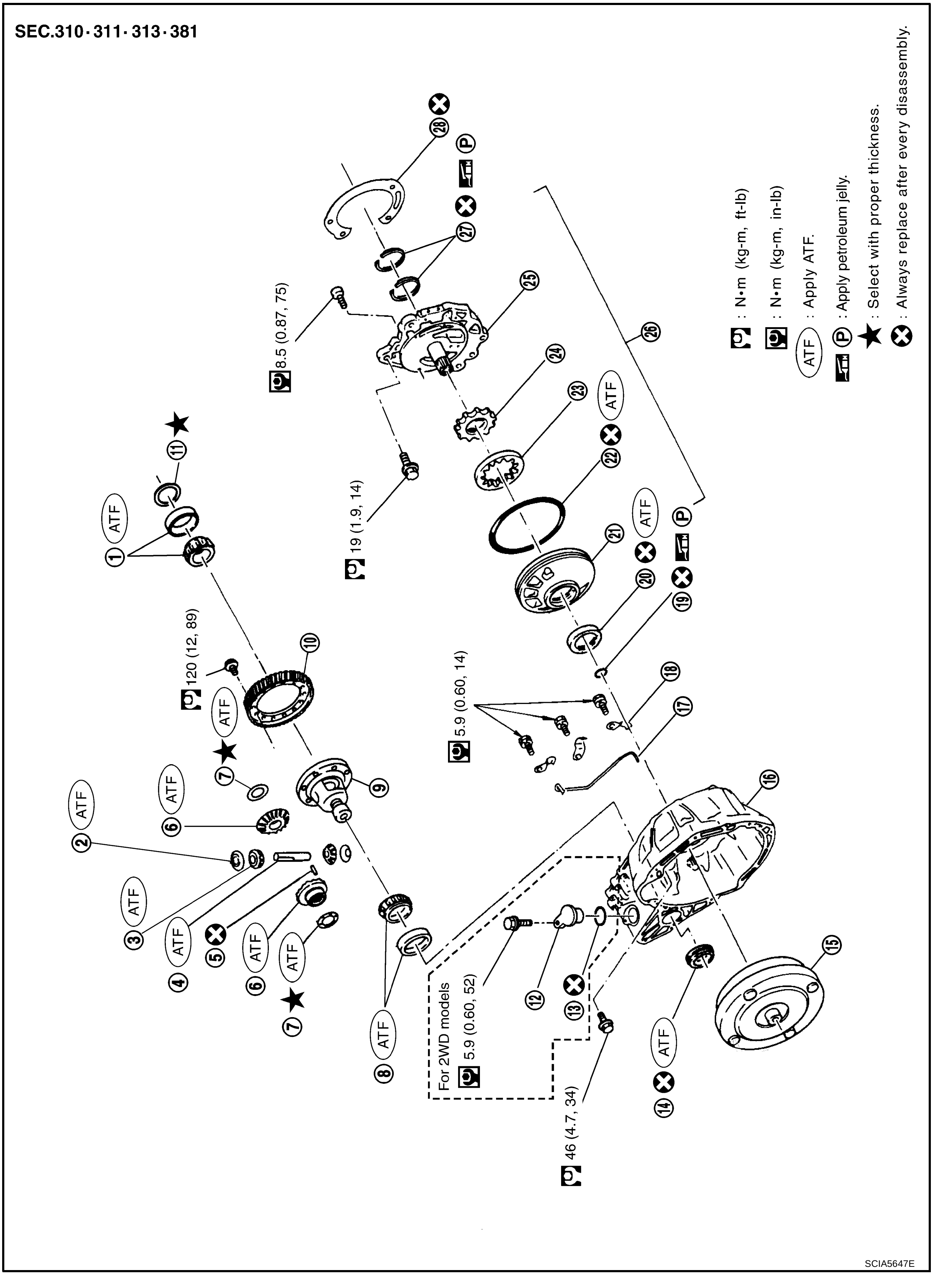

1.	Differential side bearing	2.	Pinion mate gear thrust washer	3.	Pinion mate gear
4.	Pinion mate shaft	5.	Lock pin	6.	Side gear
7.	Side gear thrust washer	8.	Differential side bearing	9.	Differential case
10.	Final gear	11.	Differential side bearing adjusting shim	12.	Plug
13.	O-ring	14.	RH differential side oil seal	15.	Torque converter
16.	Converter housing	17.	Differential lubricant tube	18.	Clip
19.	O-ring	20.	Oil pump housing oil seal	21.	Oil pump housing
22.	O-ring	23.	Outer gear	24.	Inner gear
25.	Oil pump cover	26.	Oil pump assembly	27.	Seal ring
28.	Gasket				

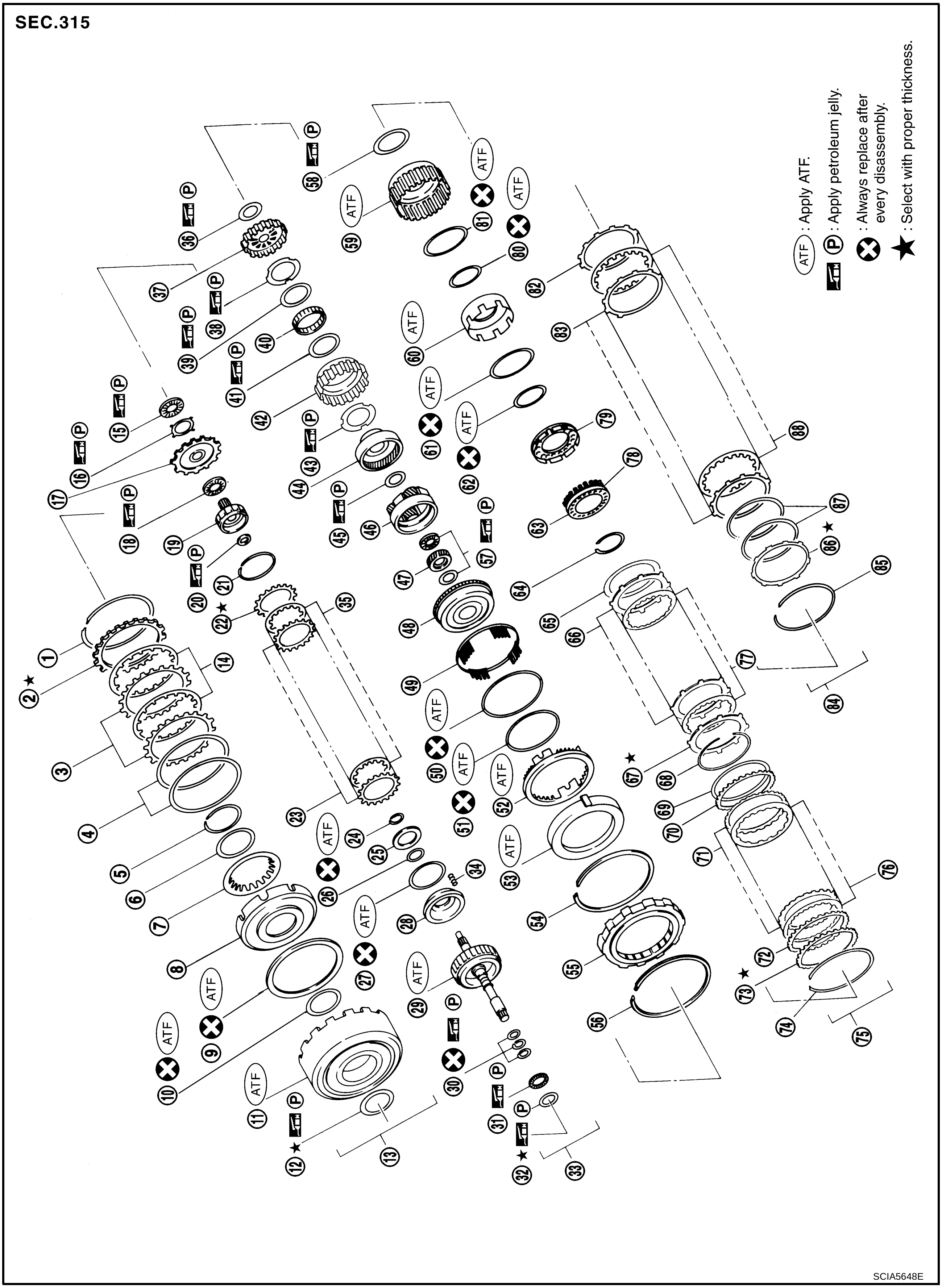

1.	Snap ring	2.	Retaining plate	3.	Driven plate
4.	Dish plate	5.	Snap ring	6.	Spring retainer
7.	Return spring	8.	Reverse clutch piston	9.	Seal ring

10. D-ring
11. Reverse clutch drum
12. Thrust washer
13. Reverse clutch assembly
14. Drive plate
15. Needle bearing
16. Bearing race
17. Front sun gear
18. Needle bearing
19. High clutch hub
20. Needle bearing
21. Snap ring
22. Retaining plate
23. Driven plate
24. Snap ring
25. Spring retainer
26. D-ring
27. D-ring
28. High clutch piston
29. Input shaft assembly (high clutch drum)
30. Seal ring
31. Needle bearing
32. Bearing race
33. High clutch assembly
34. Return spring
35. Drive plate
36. Needle bearing
37. Overrun clutch hub
38. Thrust washer
39. Bearing race
40. Forward one-way clutch
41. Bearing race
42. Forward clutch hub
43. Thrust washer
44. Rear internal gear
45. Needle bearing
46. Rear planetary carrier
47. Rear sun gear
48. Front planetary carrier
49. Spring retainer
50. D-ring
51. D-ring
52. Low & reverse brake piston
53. Retainer
54. Snap ring
55. Low one-way clutch
56. Snap ring
57. Needle bearing
58. Needle bearing
59. Forward clutch drum
60. Forward clutch piston
61. Seal ring
62. D-ring
63. Spring retainer
64. Snap ring
65. Dish plate
66. Driven plate
67. Retaining plate
68. Snap ring
69. Dish plate
70. Retaining plate
71. Driven plate
72. Retaining plate
73. Retaining plate
74. Snap ring
75. Forward clutch assembly and over-run clutch assembly
76. Drive plate
77. Drive plate
78. Return spring
79. Overrun clutch piston
80. D-ring
81. Seal ring
82. Retaining plate
83. Driven plate
84. Low & reverse brake assembly
85. Snap ring
86. Retaining plate
87. Dish plate
88. Drive plate

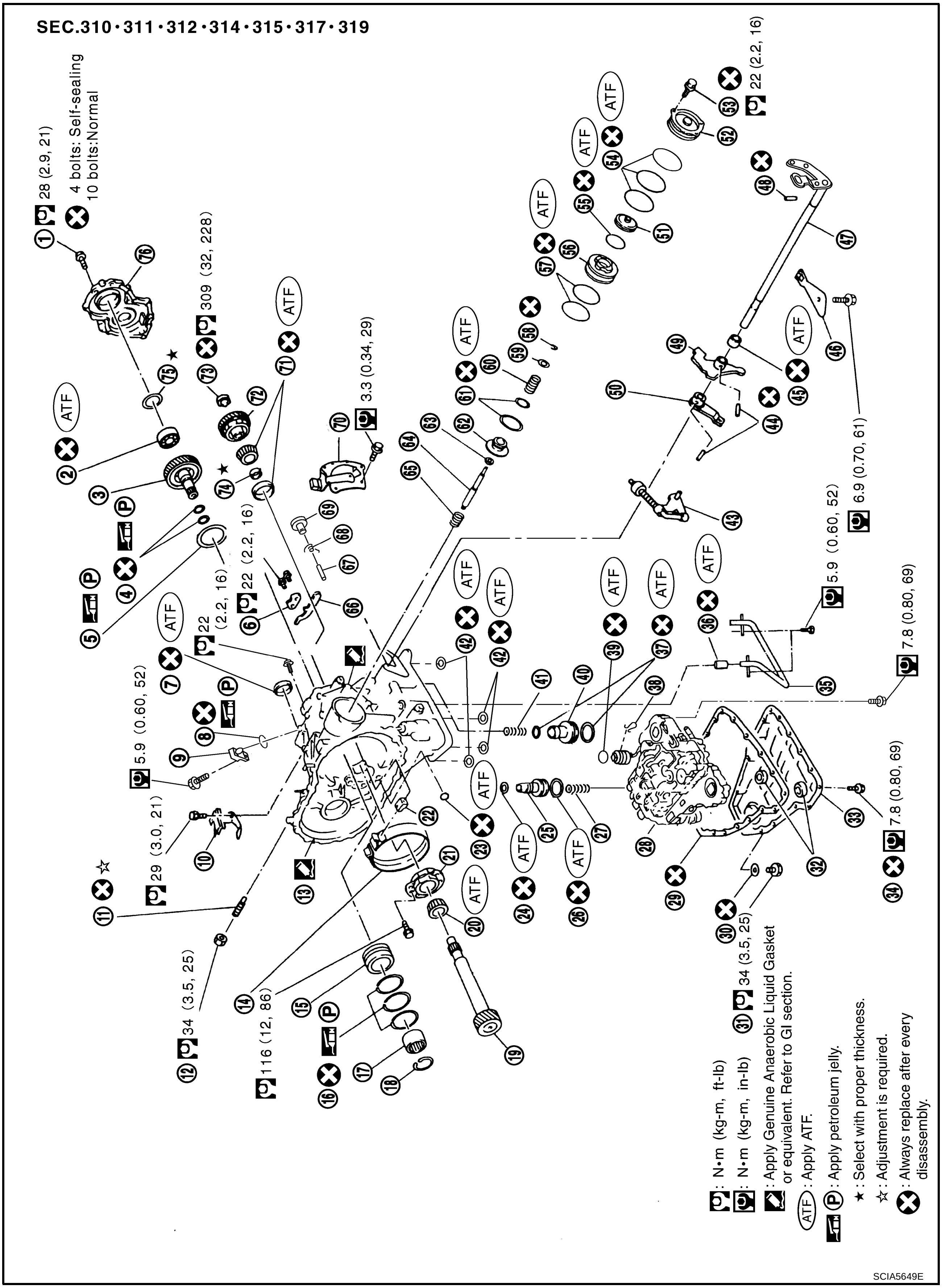

1.	Side cover fitting bolt	2.	Output shaft bearing	3.	Output shaft
4.	Seal ring	5.	Needle bearing	6.	Parking actuator support
7.	LH differential side oil seal	8.	O-ring	9.	Revolution sensor

10. Bracket
11. Anchor end pin
12. Lock nut
13. Transaxle case
14. Brake band
15. Bearing retainer
16. Seal ring
17. Radial needle bearing
18. Snap ring
19. Reduction pinion gear
20. Reduction pinion gear bearing inner race
21. Reduction pinion gear bearing outer race
22. Strut
23. O-ring
24. O-ring
25. Servo release accumulator piston
26. O-ring
27. Return spring
28. Control valve assembly
29. Oil pan gasket
30. Drain plug gasket
31. Drain plug
32. Magnet
33. Oil pan
34. Oil pan fitting bolt
35. Low & reverse brake tube
36. Oil sleeve
37. O-ring
38. Snap ring
39. O-ring
40. N-D accumulator piston
41. Return spring
42. Lip seal
43. Parking rod
44. Retaining pin
45. Manual shaft oil seal
46. Detent spring
47. Manual shaft
48. Retaining pin
49. Manual plate
50. Parking rod plate
51. OD servo piston
52. OD servo piston retainer
53. OD servo piston retainer fitting bolt
54. O-ring
55. D-ring
56. Servo piston retainer
57. O-ring
58. E-ring
59. Spring retainer
60. OD servo return spring
61. D-ring
62. Band servo piston
63. Band servo thrust washer
64. Band servo piston stem
65. 2nd servo return spring
66. Parking pawl
67. Parking shaft
68. Return spring
69. Parking pawl spacer
70. PNP switch
71. Idler gear bearing
72. Idler gear
73. Idler gear lock nut
74. Reduction pinion gear adjusting shim
75. Output shaft adjusting shim
76. Side cover

Oil Channel

ACS007V8

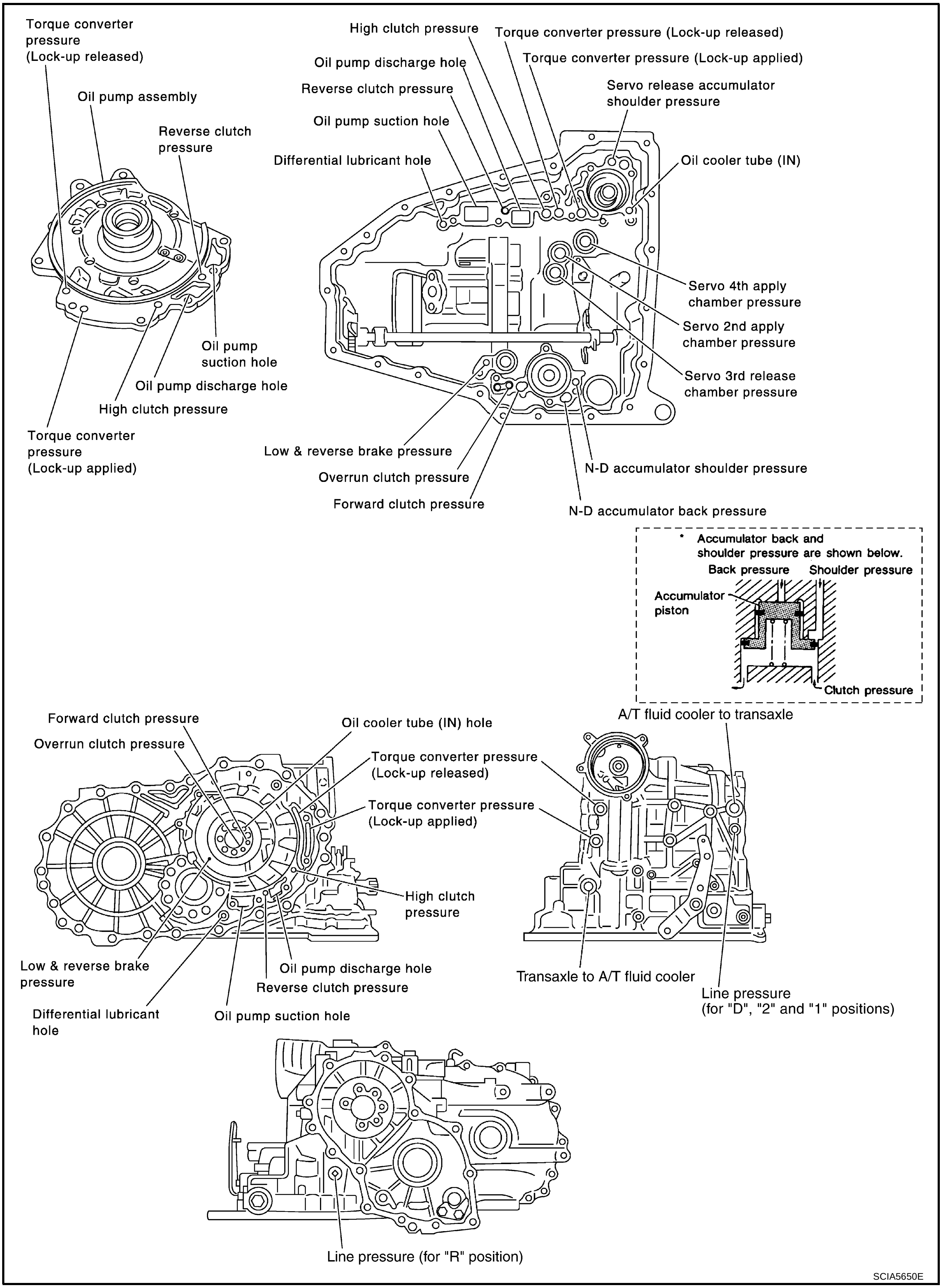

Locations of Adjusting Shims, Needle Bearings, Thrust Washers and Snap Rings

ACS007V9

Outer diameter of thrust washers

Item number	Outer diameter mm (in)	Part number*2
J*1	76.0 (2.992)	31508 80X13 - 31508 80X20
K*1	80.0 (3.150)	31438 80X60 - 31438 80X70

Outer and inner diameter of needle bearings

Item number	Outer diameter mm (in)	Inner diameter mm (in)	Part number*2
A	49.1 (1.933)	35.2 (1.386)	31407 80X10
B	42.0 (1.654)	23.7 (0.933)	31407 80X01
C	70.0 (2.756)	50.0 (1.969)	31407 80X09
D	51.0 (2.008)	33.1 (1.303)	31407 80X02
E	48.0 (1.890)	30.0 (1.181)	31407 80X03
F	49.1 (1.933)	35.1 (1.382)	31407 80X10
G	56.5 (2.224)	38.5 (1.516)	31407 80X08
H	87.0 (3.425)	69.0 (2.717)	31407 80X07
I	108.0 (4.252)	85.15 (3.3524)	31407 80X24

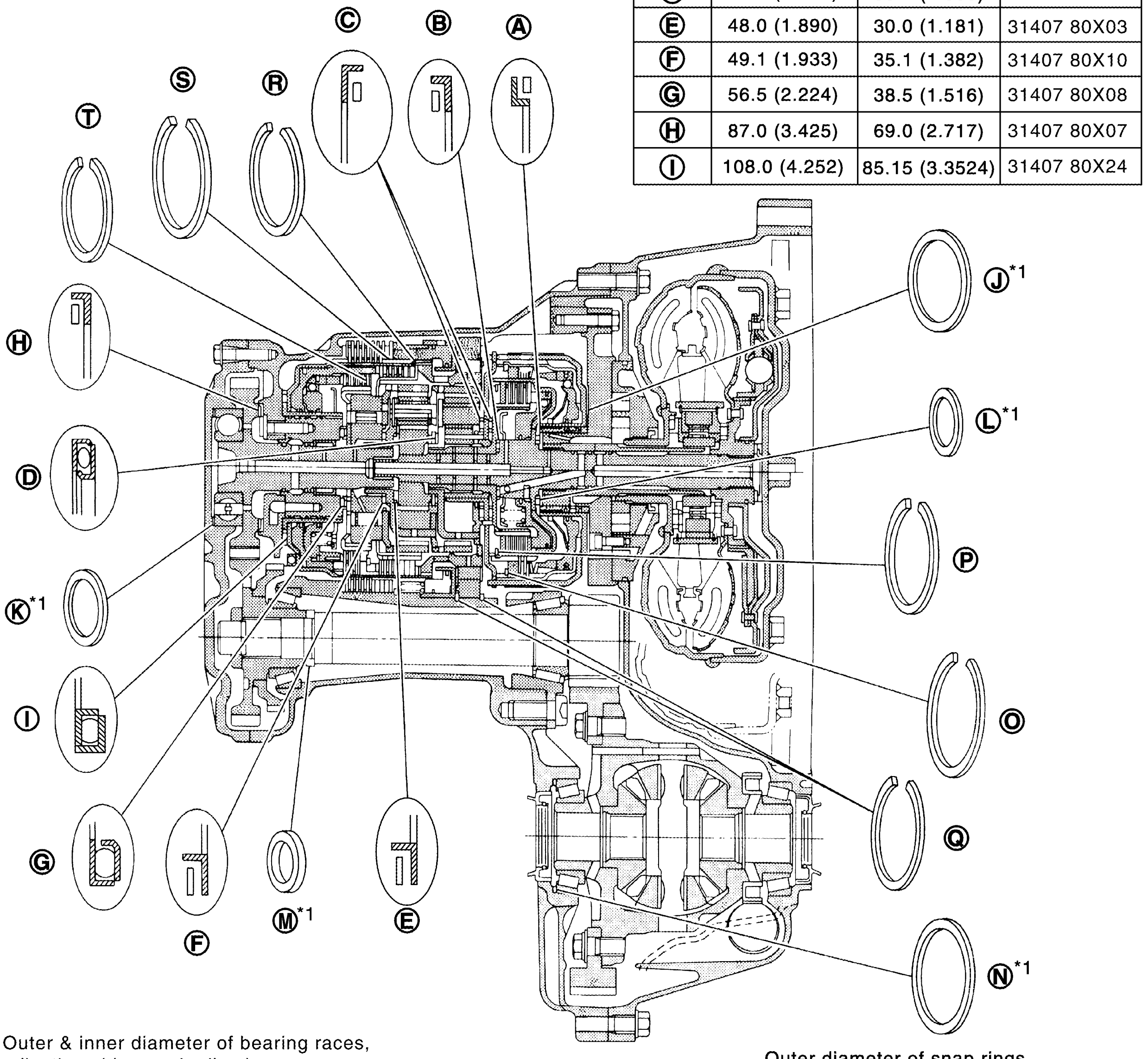

Outer & inner diameter of bearing races, adjusting shims and adjusting spacer

Item number	Outer diameter mm (in)	Inner diameter mm (in)	Part number*2
L*1	51.0 (2.008)	36.0 (1.417)	31435 80X00 - 31435 80X06 31435 80X09 - 31435 80X14
M*1	38.0 (1.496)	28.1 (1.106)	31439 85X01 - 31439 85X06 31439 83X11 - 31439 83X24 31439 81X00 - 31439 81X24 31439 81X46 - 31439 81X49 31439 81X60 - 31439 81X74
N*1	75.0 (2.953)	67.0 (2.638)	31438 80X00 - 31438 80X11

Outer diameter of snap rings

Item number	Outer diameter mm (in)	Part number*2
O	150 (5.91)	31506 80X13
P	119.1 (4.689)	31506 80X06
Q	182.8 (7,197)	31506 80X08
R	144.8 (5.701)	31506 80X03
S	173.8 (6.843)	31506 80X09
T	133.9 (5.272)	31506 80X01

*1: Select proper thickness.

*2: Always check with the Parts Department for the latest parts information.

SCIA5660E

DISASSEMBLY

PFP:31020

Disassembly

ACS007VA

1. Drain ATF through drain hole.
2. Remove drain plug gasket from drain plug.

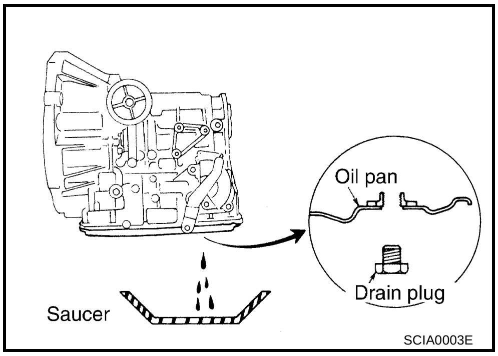

3. Remove torque converter.

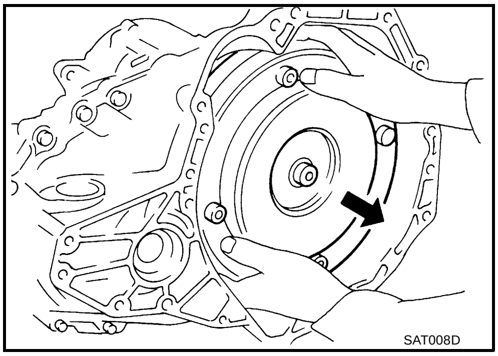

4. Check torque converter one-way clutch using check tool as shown in the right figure.
   a. Insert check tool into groove of bearing support built into one-way clutch outer race.
   b. When fixing bearing support with check tool, rotate one-way clutch spline using screwdriver.
   c. Make sure that inner race rotates clockwise only. If not, replace torque converter assembly.

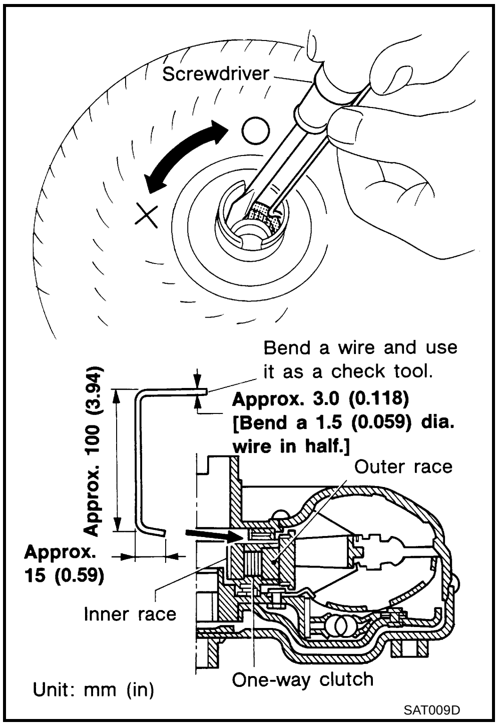

5. Set manual shaft to “P” position.
6. Remove PNP switch.
7. Remove bracket from transaxle case.
8. Remove revolution sensor from transaxle case.
9. Remove O-ring from revolution sensor.

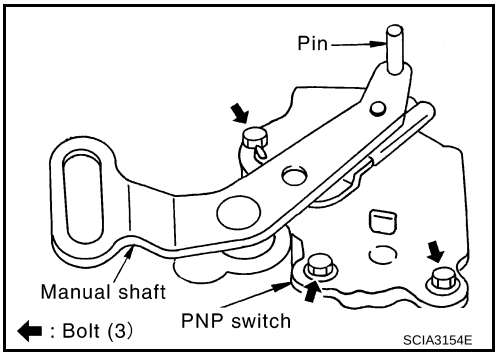

10. Remove oil pan fitting bolts.
11. Remove oil pan and oil pan gasket.
12. Check foreign materials in oil pan to help determine causes of malfunction. If the ATF is very dark, smells burned, or contains foreign particles, frictional material (clutches, band) may need replacement. A tacky film that will not wipe clean indicates varnish build up. Varnish can cause valves, servo, and clutches to stick and can inhibit pump pressure.
    - **If frictional material is detected, perform A/T fluid cooler cleaning. Refer to AT-17, "A/T Fluid Cooler Cleaning" .**
13. Remove magnets from oil pan.

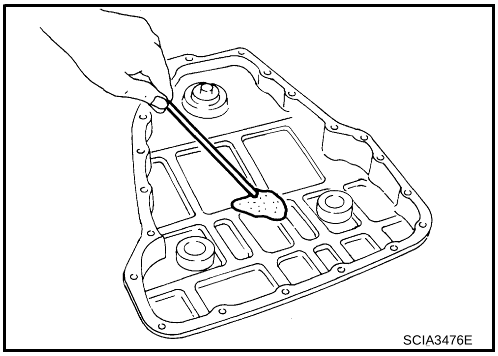

14. Remove control valve assembly according to the following procedures.

a. Remove snap ring from terminal body.

   CAUTION:
   Do not expand snap ring excessively.

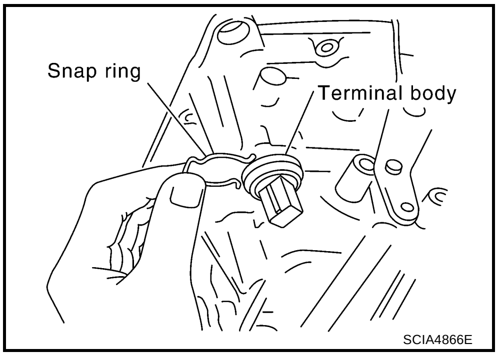

b. Push terminal body into transaxle case and draw out terminal cord assembly.

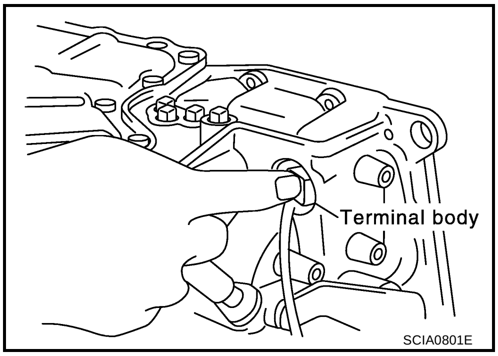

c. Remove control valve assembly fixing bolts **A** , **B** and **C** .

Bolt length, number and location:

Bolt symbol	A	B	C
Bolt length " ℓ " mm (in)	40.0 (1.575)	33.0 (1.299)	43.5 (1.713)
Number of bolts	5	6	2

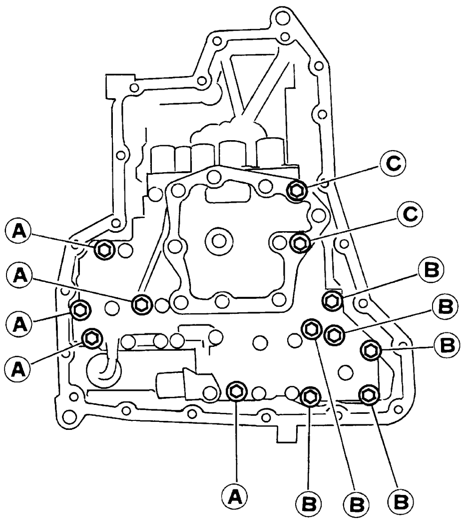

AAT260A

15. Remove manual valve from control valve assembly.

CAUTION:

Be careful not to drop manual valve.

16. Remove O-ring from terminal body.

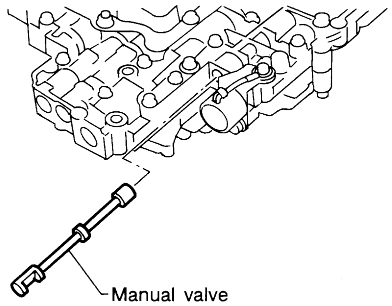

SAT005F

17. Remove return spring from servo release accumulator piston.

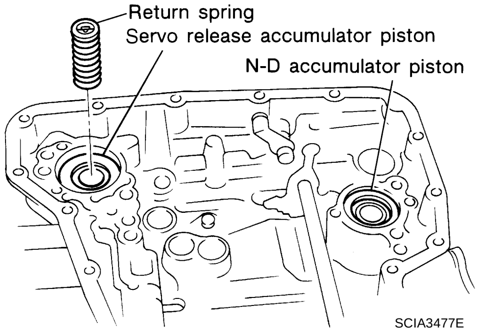

SCIA3477E

18. Remove servo release accumulator piston with compressed air.

CAUTION:

- **Strong flow of air will push accumulator piston out along with a splash of oil. Cover the area with paper towels and blow air little by little to avoid this.**
- **Wrap the removed accumulator piston in a lint-free paper.**

19. Remove O-rings from servo release accumulator piston.

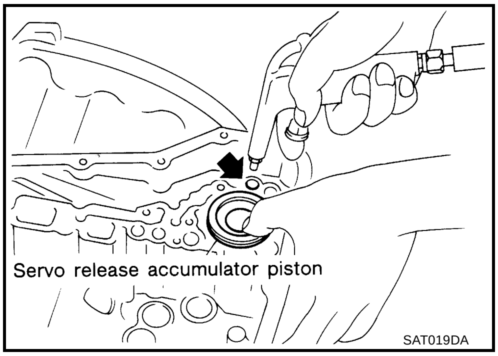

20. Remove N-D accumulator piston and return spring with compressed air.

CAUTION:

- **Strong flow of air will push accumulator piston out along with a splash of oil. Cover the area with paper towels and blow air little by little to avoid this.**
- **Wrap the removed accumulator piston in a lint-free paper.**

21. Remove O-rings from N-D accumulator piston.

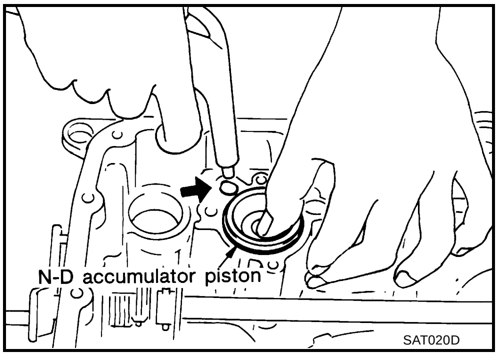

22. Check accumulator pistons and contact surface of transaxle case for damage.
23. Check return springs for damage and free length. Refer to AT-378, "RETURN SPRING" .

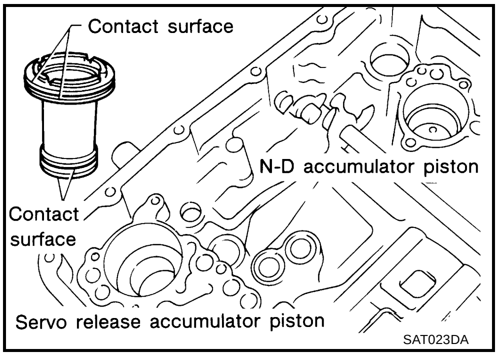

24. Remove lip seals from oil groove for band servo.

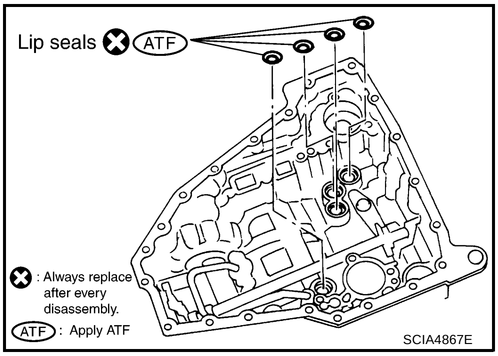

25. Remove low & reverse brake tube and oil sleeve.

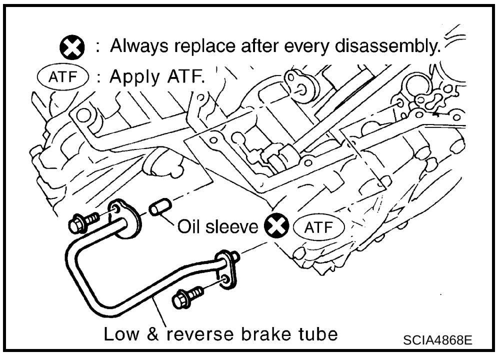

26. Remove converter housing according to the following procedures.

a. Remove converter housing mounting bolts.
b. Remove converter housing by lightly tapping it with a soft hammer.

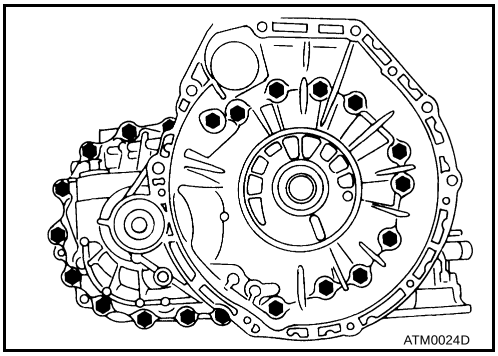

c. Remove O-ring from differential oil port.

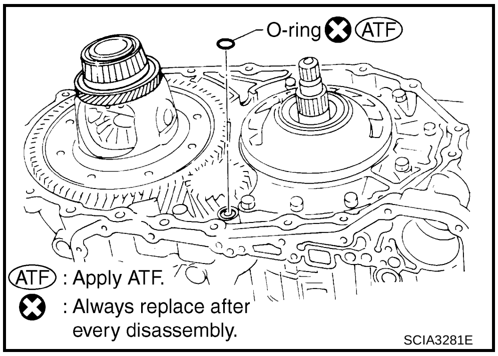

27. Remove final drive assembly from transaxle case.

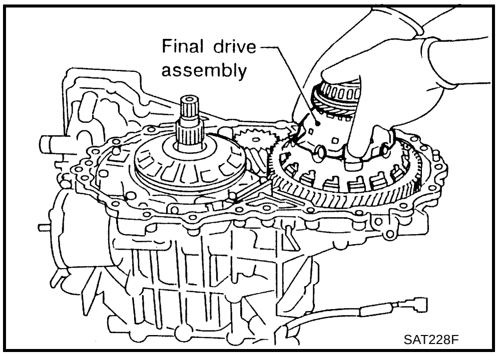

28. Remove differential side bearing outer race from transaxle case.

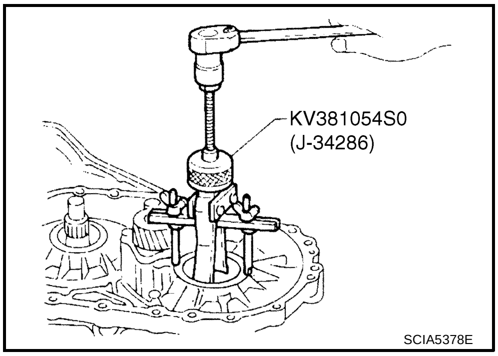

29. Remove differential side bearing adjusting shim from transaxle case.

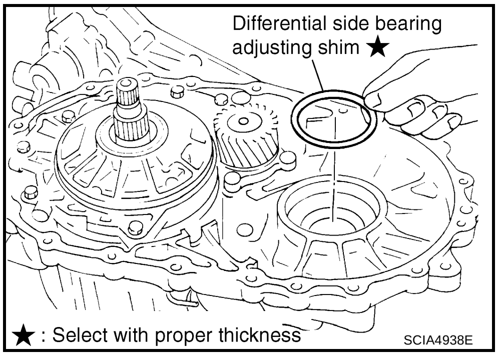

30. Remove differential side bearing outer race from converter housing.

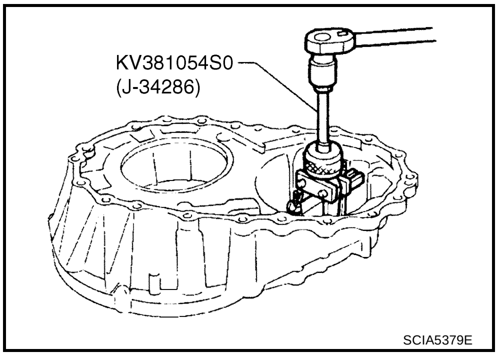

31. Remove RH differential side oil seal with flat-bladed screwdriver from converter housing.

CAUTION:

Be careful not to damage converter housing.

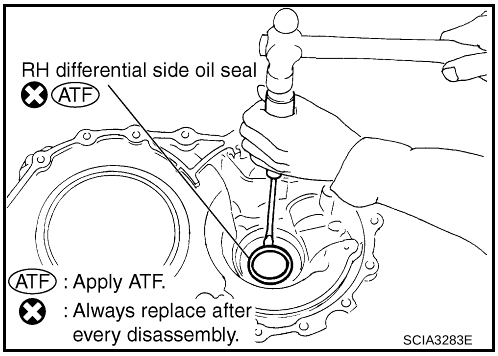

32. Remove differential lubricant tube from converter housing.
33. Remove plug from converter housing. (For 2WD models)
34. Remove O-ring from plug. (For 2WD models)

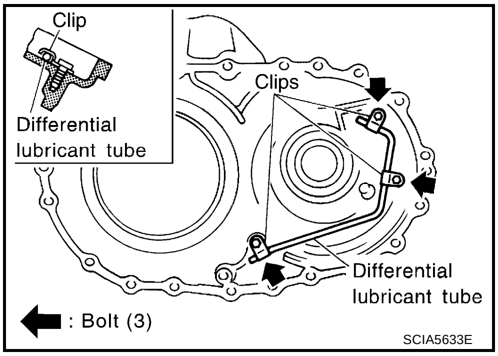

35. Remove oil pump assembly according to the following procedures.

a. Remove O-ring from input shaft assembly (high clutch drum).

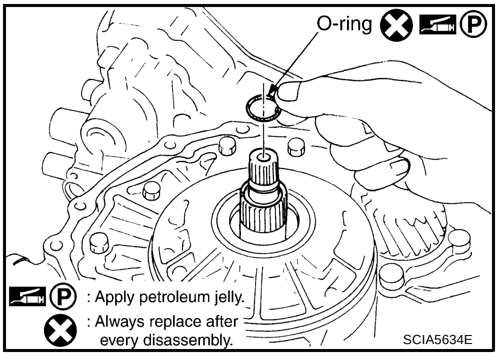

b. Remove oil pump assembly and gasket from transaxle case.

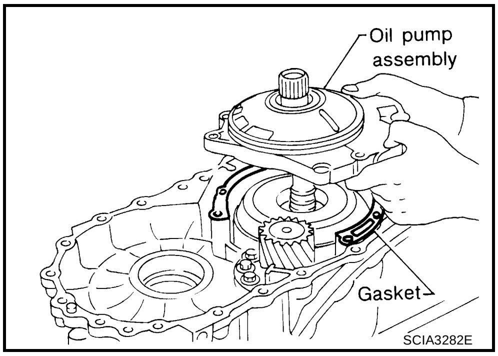

c. Remove thrust washer and bearing race from oil pump assembly.

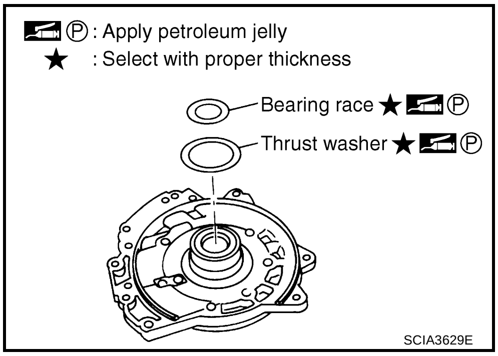

SCIA3629E

36. Remove brake band according to the following procedures.

a. Loosen lock nut, then back off anchor end pin.

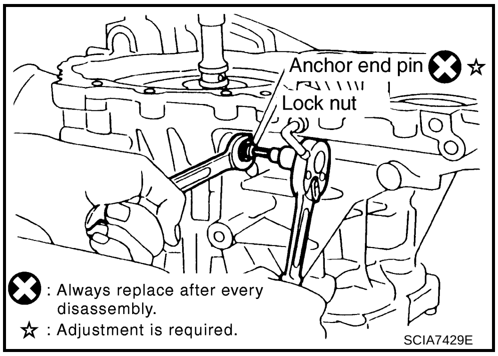

SCIA7429E

b. Remove brake band and strut from transaxle case.

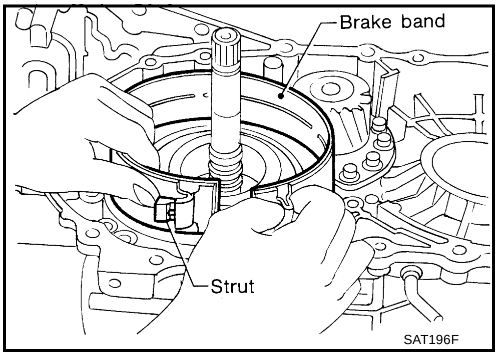

SAT196F

- **To prevent brake linings from cracking or peeling, do not stretch the flexible band unnecessarily. When removing brake band, always secure it with a clip as shown in the right figure.**
  Leave the clip in position after removing brake band.

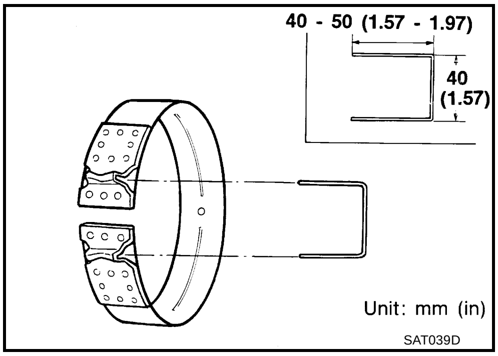

SAT039D

c. Check brake band facing for damage, cracks, wear or burns.

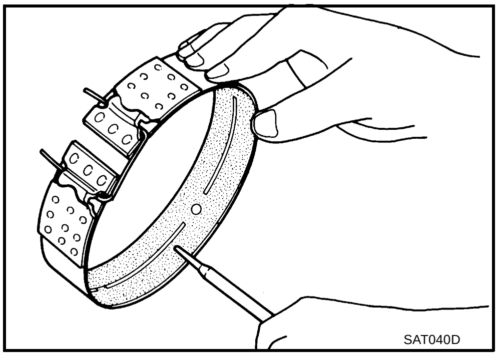
SAT040D

37. Remove input shaft assembly (high clutch assembly) and reverse clutch assembly according to the following procedures.

a. Remove input shaft assembly (high clutch assembly) with reverse clutch assembly.

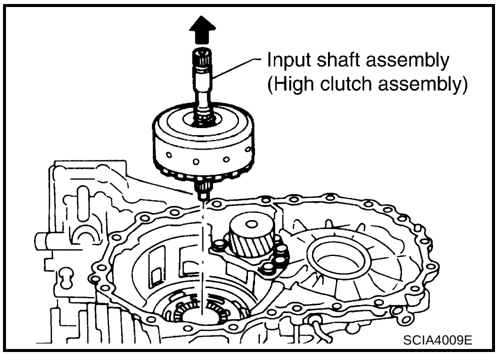

b. Remove input shaft assembly (high clutch assembly) from reverse clutch drum.

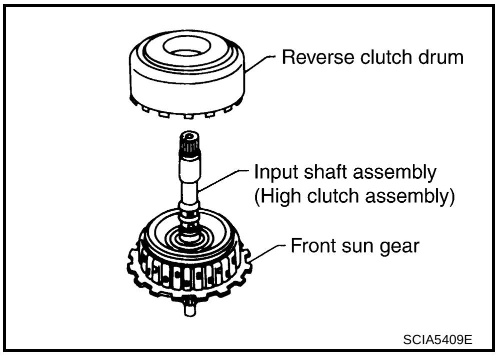

c. Remove needle bearing from input shaft assembly (high clutch drum) and check for damage or wear.

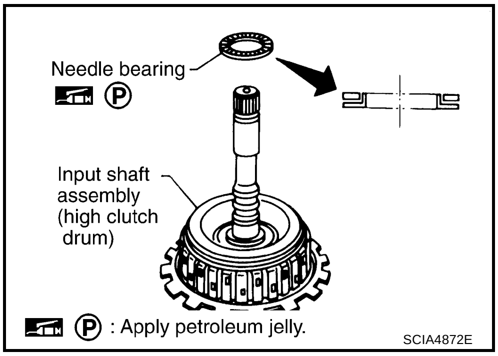

d. Remove high clutch hub (with front sun gear) and needle bearing from input shaft assembly (high clutch drum) and check for damage or wear.

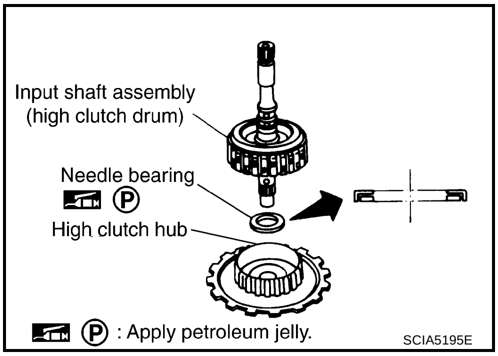

e. Remove front sun gear and needle bearing from high clutch hub and check for damage or wear.

f. Remove bearing race from front sun gear and check for damage or wear.

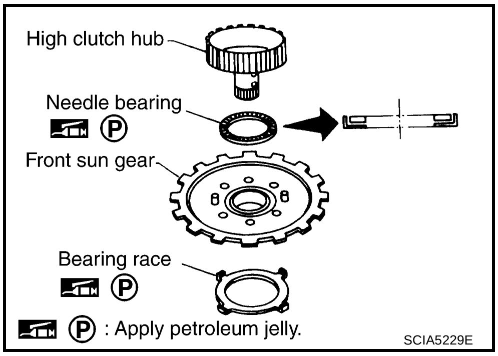

38. Remove needle bearing from transaxle case and check for damage or wear.

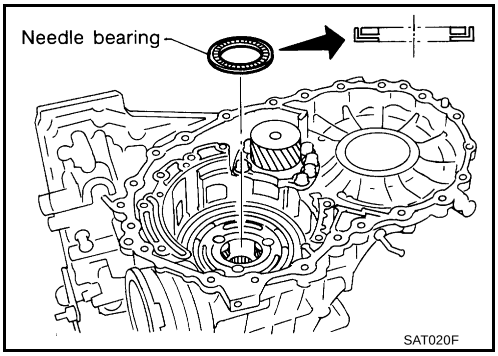

39. Apply compressed air and check to see that low & reverse brake operates.

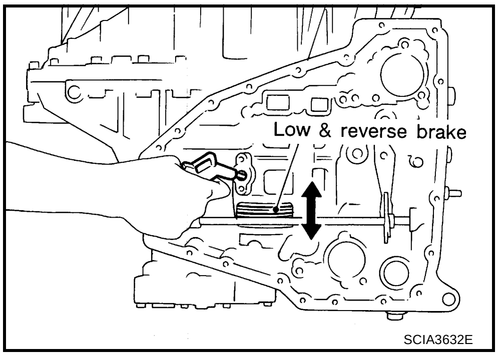

40. Remove low one-way clutch and front planetary carrier according to the following procedures.

a. Remove snap ring with flat-bladed screwdriver.

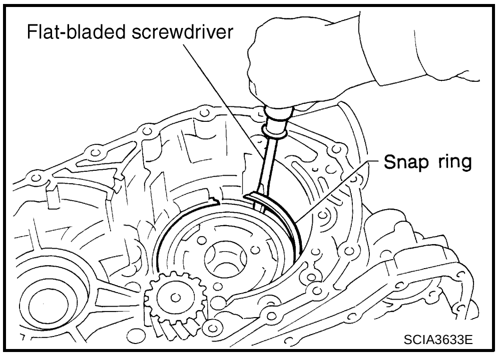

b. Remove low one-way clutch with a hook made of wire.

c. Check low one-way clutch for damage or wear.

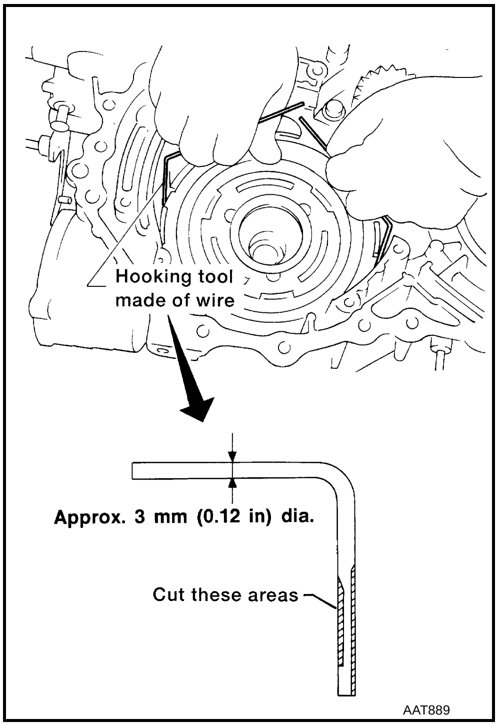

d. Remove snap ring with flat-bladed screwdriver.

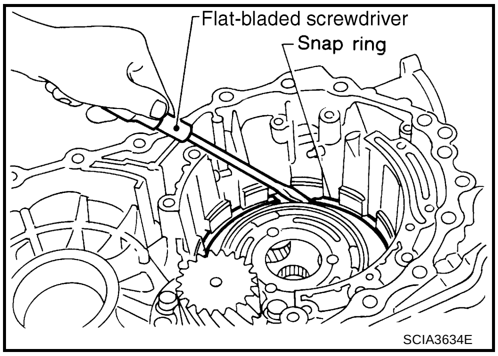

e. Remove front planetary carrier with low & reverse brake piston and retainer.

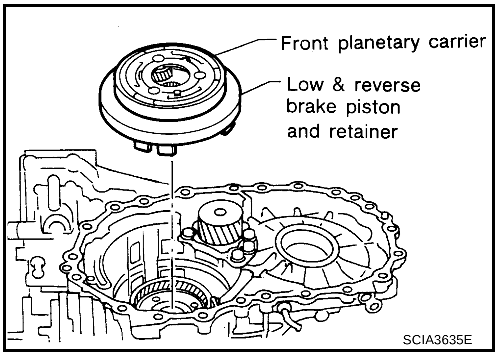

f. Remove spring retainer.

CAUTION:

Do not remove return springs from spring retainer.

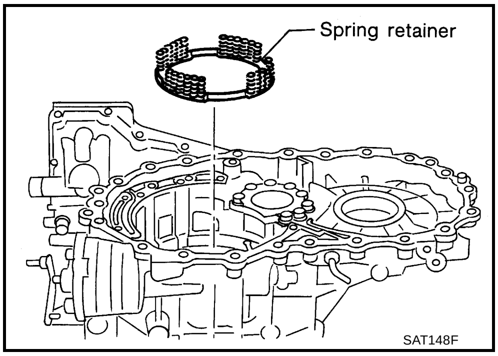

g. Make sure that low one-way clutch rotates in the direction of clockwise arrow and locks in opposite direction.

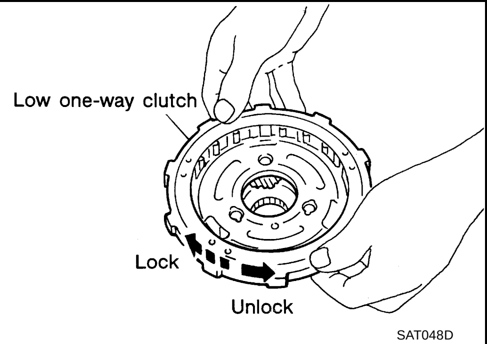

SAT048D

h. Remove needle bearing, low & reverse brake piston and retainer from front planetary carrier.

i. Check front planetary carrier, low & reverse brake piston, retainer and needle bearing for damage or wear.

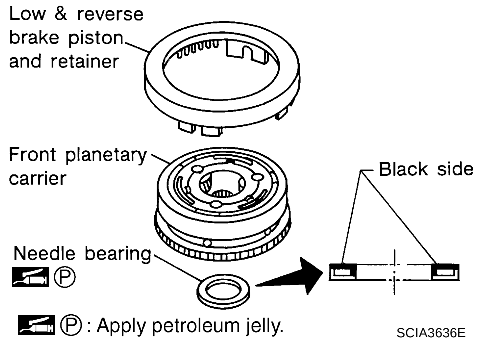

SCIA3636E

j. Check clearance between pinion washer and front planetary carrier with feeler gauge.

Standard clearance: 0.20 - 0.70 mm (0.0079 - 0.0276 in)

Allowable limit: 0.80 mm (0.0315 in)

Replace front planetary carrier if the clearance exceeds allowable limit.

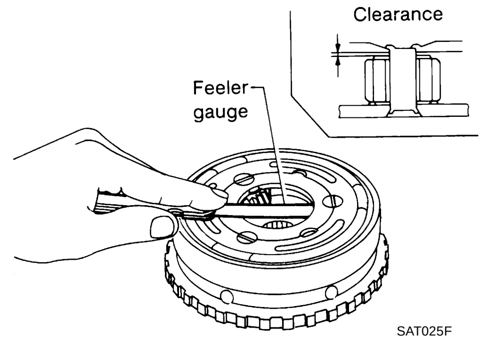

SAT025F

41. Remove rear planetary carrier and rear sun gear according to the following procedures.

a. Remove rear planetary carrier (with rear sun gear) from transaxle case.

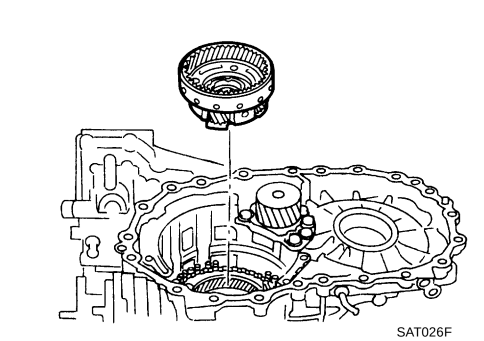
SAT026F

b. Remove rear sun gear from rear planetary carrier.

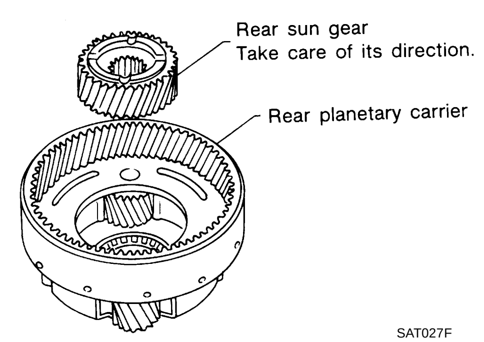

SAT027F

c. Remove needle bearings from rear planetary carrier.

d. Check rear planetary carrier, rear sun gear and needle bearings for damage or wear.

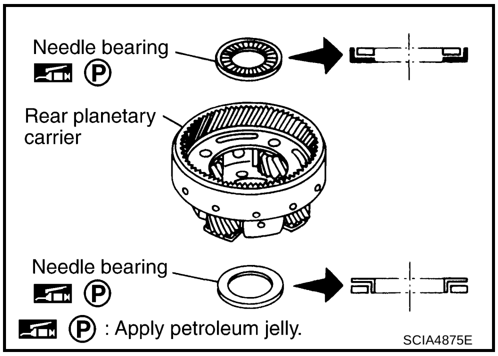

e. Check clearance between pinion washer and rear planetary carrier with feeler gauge.

Standard clearance: 0.20 - 0.70 mm (0.0079 - 0.0276 in)

Allowable limit: 0.80 mm (0.0315 in)

Replace rear planetary carrier if the clearance exceeds allowable limit.

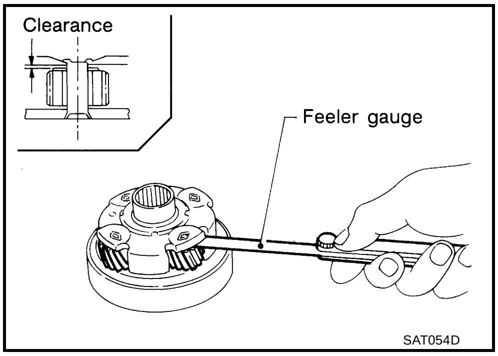

42. Remove rear internal gear and forward clutch hub from transaxle case.

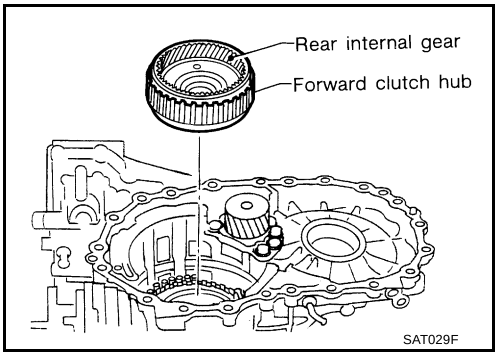

43. Remove overrun clutch hub from transaxle case.

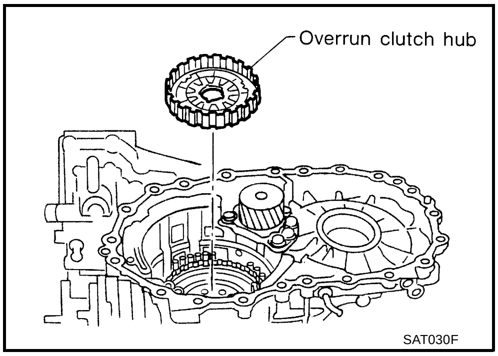

44. Remove needle bearing from overrun clutch hub and check for damage or wear.

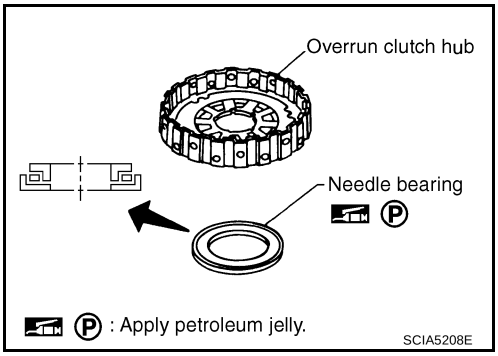

45. Remove forward clutch assembly and overrun clutch assembly from transaxle case.

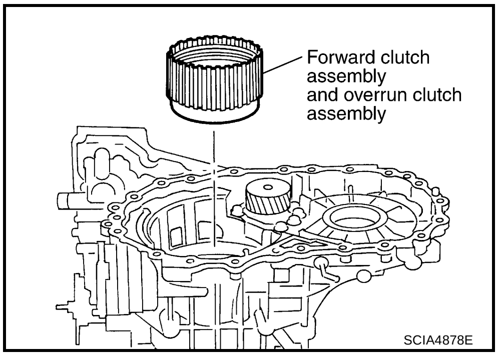

46. Remove needle bearing from transaxle case and check for damage or wear.

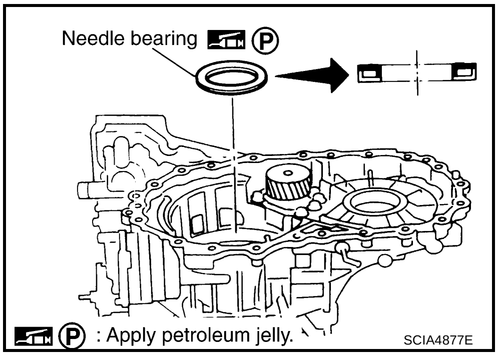

47. Remove output shaft assembly according to the following procedures.

a. Remove side cover fitting bolts.

CAUTION:

- **Do not mix bolts A and B.**
- **Always replace bolts A as they are self-sealing bolts.**

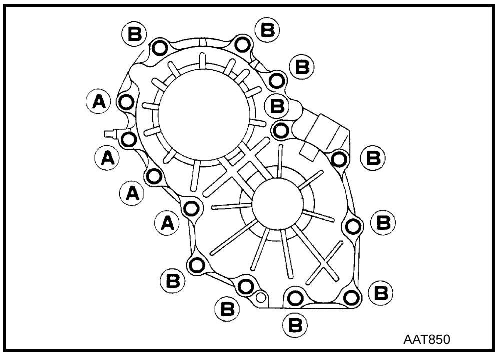

b. Remove side cover by lightly tapping it with a soft hammer.

CAUTION:

- **Be careful not to drop output shaft assembly. It might come out when removing side cover.**
- **Be careful not to damage side cover.**

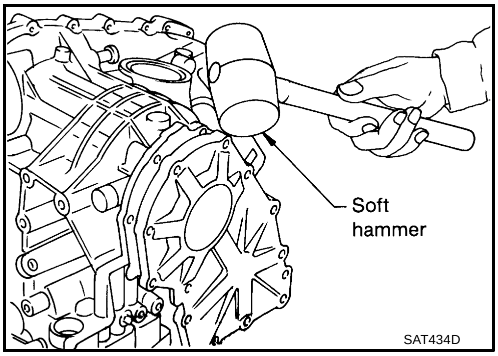

c. Remove output shaft adjusting shim.

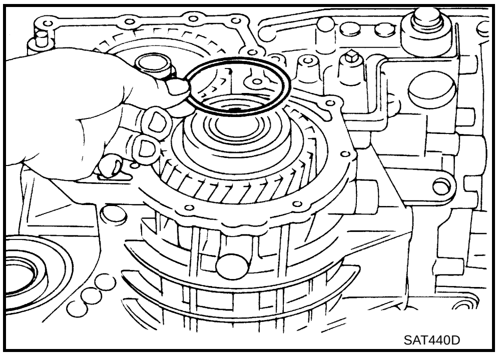

d. Remove output shaft assembly.

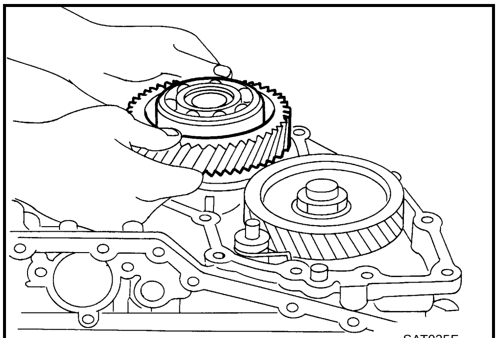
SAT035F

- If output shaft assembly came off with side cover, tap side cover with a soft hammer to separate.

  CAUTION:
  Be careful not to damage side cover.

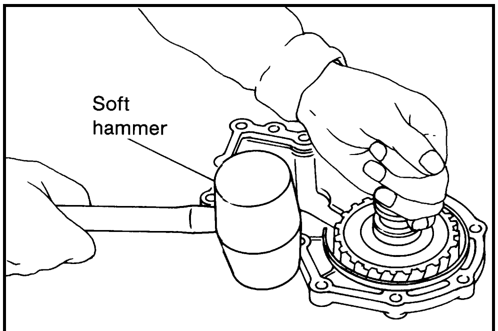

SAT435D

e. Remove needle bearing.

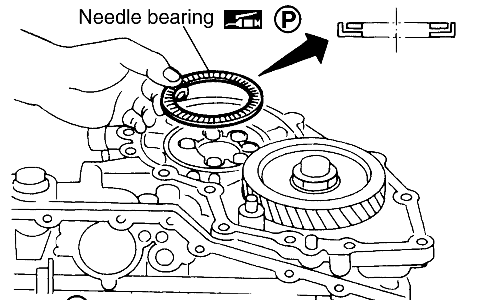

SCIA4879E

f. Remove bearing retainer from transaxle case.

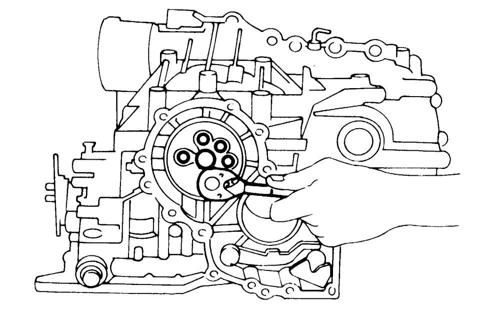
ATM0315D

48. Disassemble reduction pinion gear according to the following procedures.

a. Set manual shaft to “P” position to fix idler gear.

b. Unlock idler gear lock nut, using a pin punch.

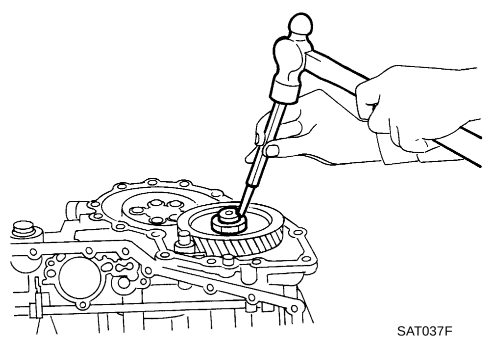
SAT037F

c. Remove idler gear lock nut.

CAUTION:

Do not reuse idler gear lock nut.

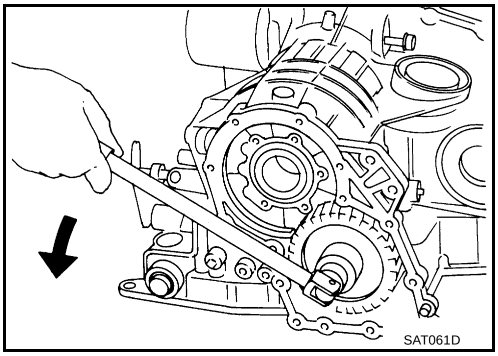

d. Remove idler gear with puller.

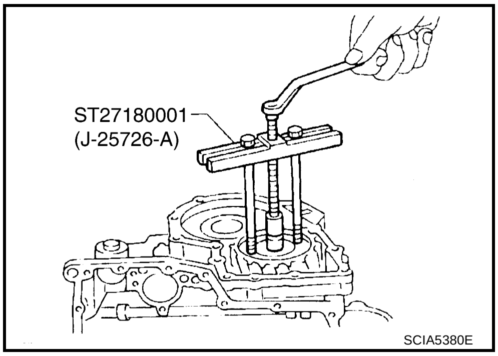

e. Remove reduction pinion gear.

f. Remove reduction pinion gear adjusting shim from reduction pinion gear.

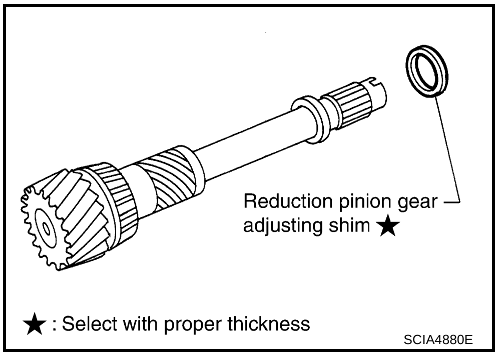

49. Remove return spring and parking pawl spacer with flat-bladed screwdriver from parking shaft.
50. Draw out parking shaft and remove parking pawl from transaxle case.
51. Check parking pawl and parking shaft for damage or wear.

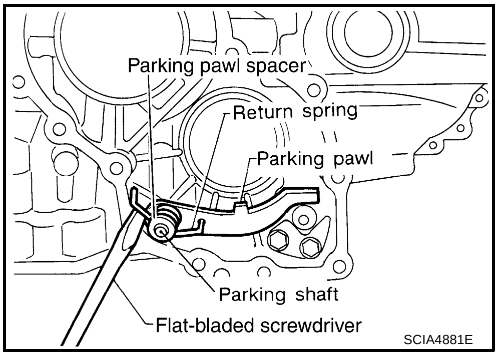

52. Remove parking actuator support from transaxle case.
53. Check parking actuator support for damage or wear.

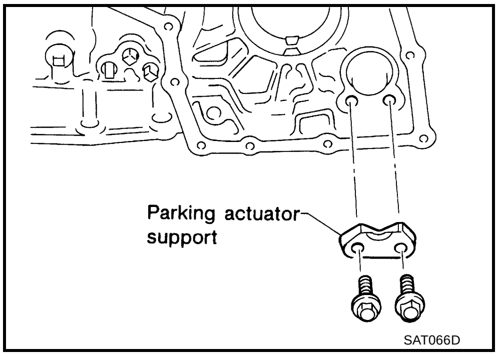

54. Remove LH differential side oil seal with flat-bladed screwdriver from transaxle case.

    CAUTION:

    Be careful not to scratch transaxle case.

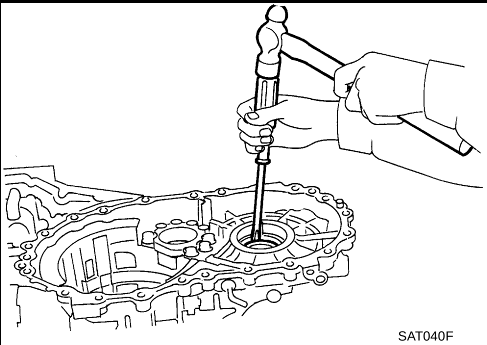

SAT040F

REPAIR FOR COMPONENT PARTS

PFP:00000

Manual Shaft

ACS007VB

COMPONENTS

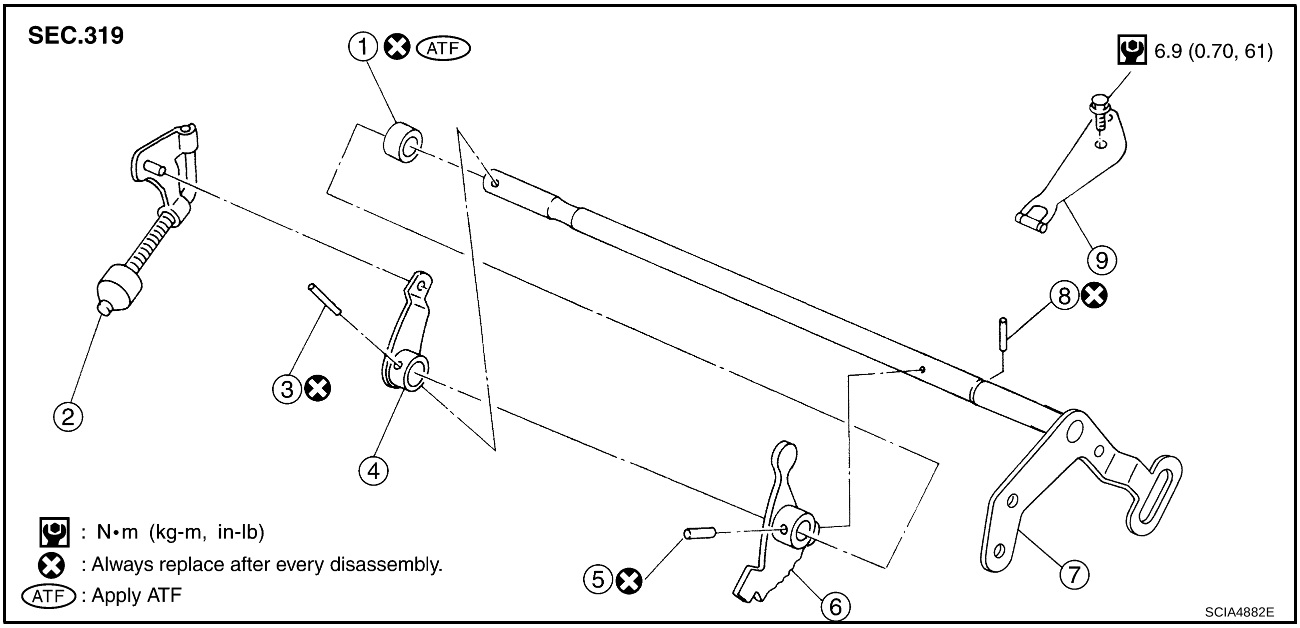

1.	Manual shaft oil seal	2.	Parking rod	3.	Retaining pin
4.	Parking rod plate	5.	Retaining pin	6.	Manual plate
7.	Manual shaft	8.	Retaining pin	9.	Detente spring

REMOVAL

1. Remove detente spring from transaxle case.

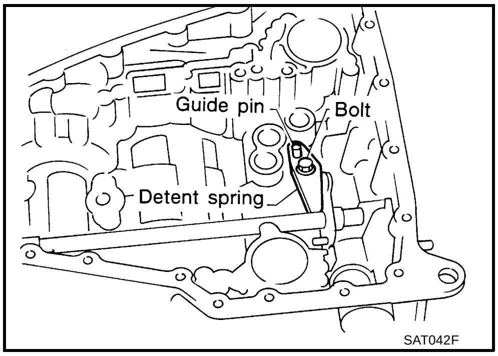

2. Drive out manual plate retaining pin.

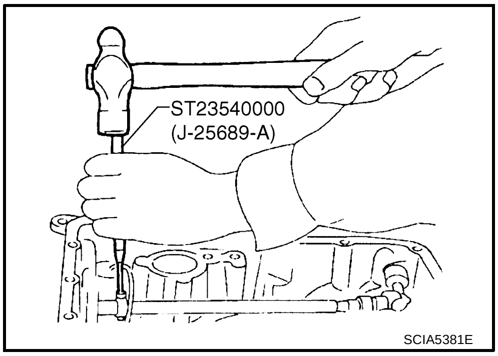

3. Drive and pull out parking rod plate retaining pin.
4. Remove parking rod plate (with parking rod) from manual shaft.
5. Draw out parking rod (with parking rod plate) from transaxle case.
6. Remove parking rod from parking rod plate.

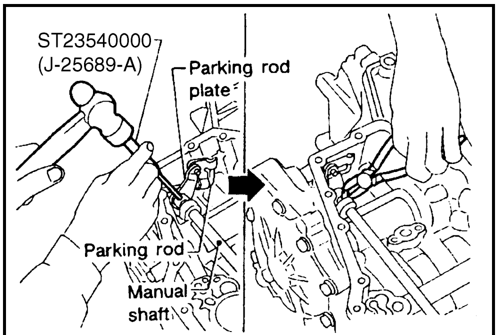

SCIA5382E

7. Pull out manual shaft retaining pin.
8. Remove manual shaft and manual plate from transaxle case.

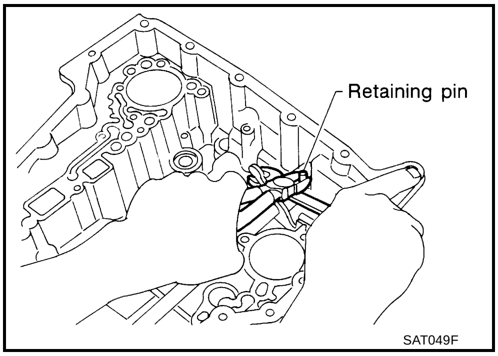

SAT049F

9. Remove manual shaft oil seal.

   CAUTION:

   Be careful not to scratch transaxle case.

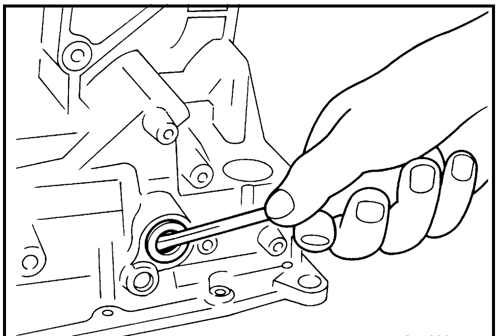
SAT080D

INSPECTION

- Check component parts for wear or damage. Replace if necessary.

INSTALLATION

1. Use a drift [commercial service tool ϕ 22 mm (0.87 in)] to drive manual shaft oil seal into the transaxle case.

   CAUTION:

   - **Do not reuse manual shaft oil seal.**
   - **Apply ATF to outer surface of manual shaft oil seal.**
2. Install parking rod to parking rod plate.

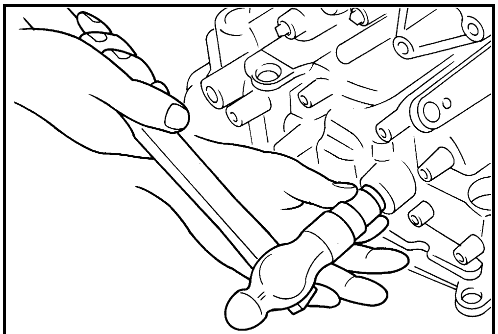
SAT081D

3. Install manual shaft and manual plate.
4. Install parking rod plate (with parking rod) on manual shaft.

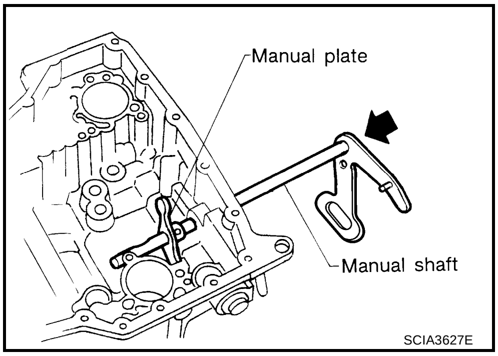

5. Align groove of manual shaft and hole of transaxle case.
6. Install manual shaft retaining pin up to bottom of hole.

   CAUTION:

   Do not reuse retaining pin.

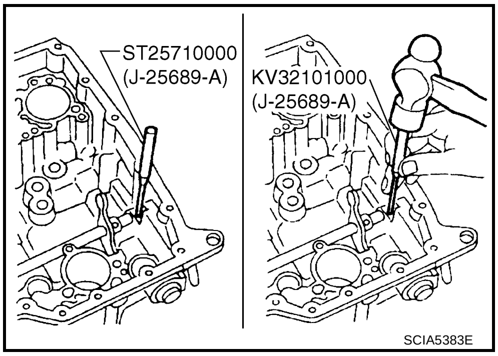

7. Set parking rod plate onto manual shaft and drive retaining pin.

   CAUTION:

   - **Do not reuse retaining pin.**
   - **Both ends of pin should protrude.**

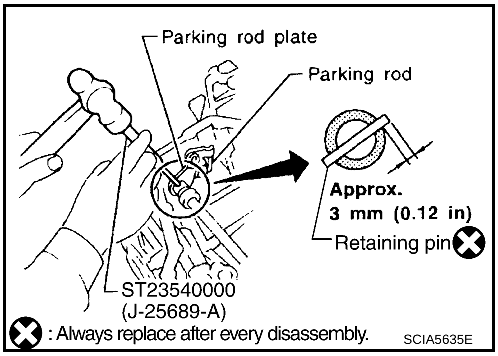

8. Install manual plate retaining pin.

   CAUTION:

   - **Do not reuse retaining pin.**
   - **Both ends of pin should protrude.**

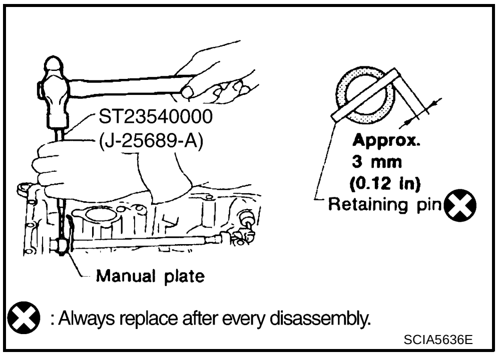

9. Install detente spring on transaxle case. Tighten detente spring fitting bolt to the specified torque. Refer to AT-287, "COMPONENTS" .

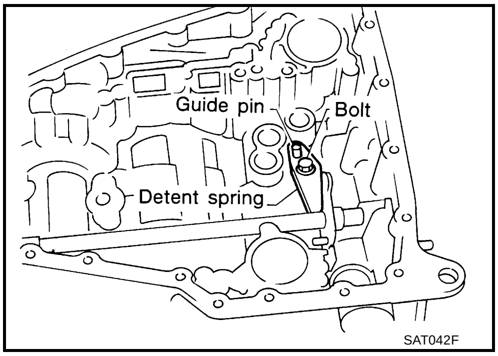

Oil Pump

ACS007VC

COMPONENTS

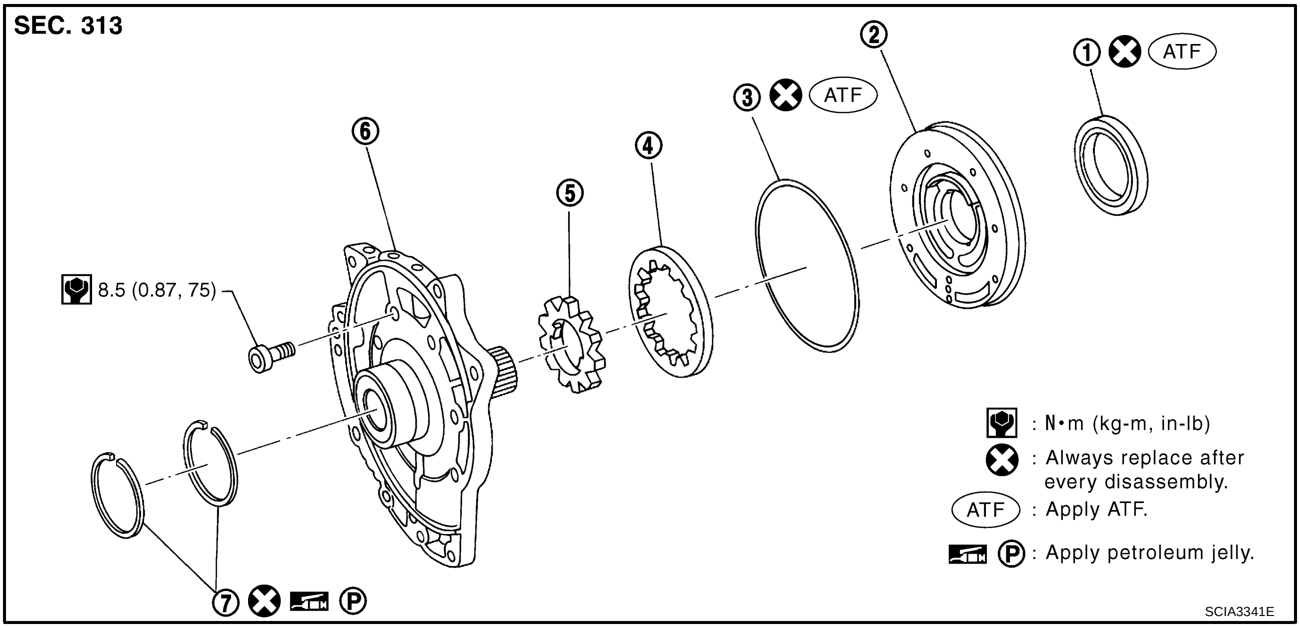

1. Oil pump housing oil seal
2. Oil pump housing
3. O-ring
4. Outer gear
5. Inner gear
6. Oil pump cover
7. Seal ring

DISASSEMBLY

1. Remove seal rings.

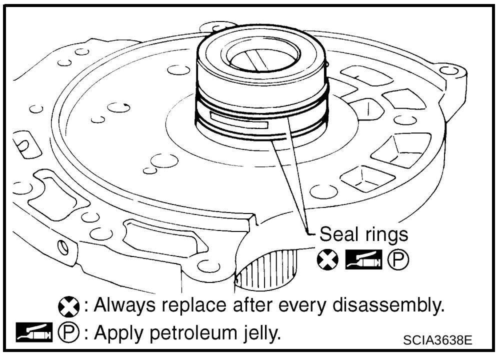

2. Loosen bolts in a crisscross pattern and remove oil pump cover.

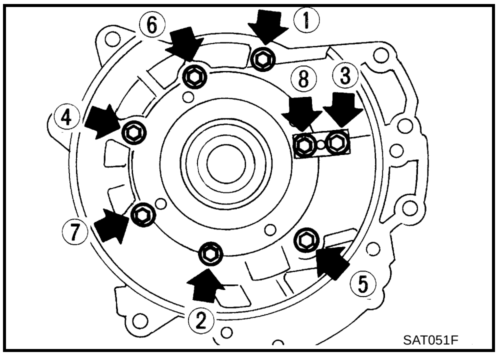

3. Remove inner gear and outer gear from oil pump housing.

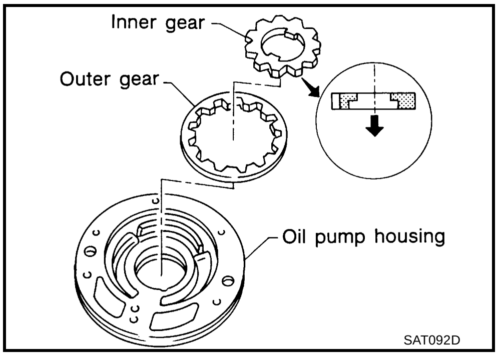

4. Remove O-ring from oil pump housing.

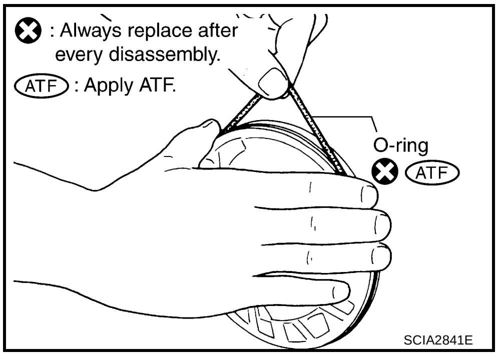

5. Remove oil pump housing oil seal with flat-bladed screwdriver.

   CAUTION:

   Be careful not to scratch oil pump housing.

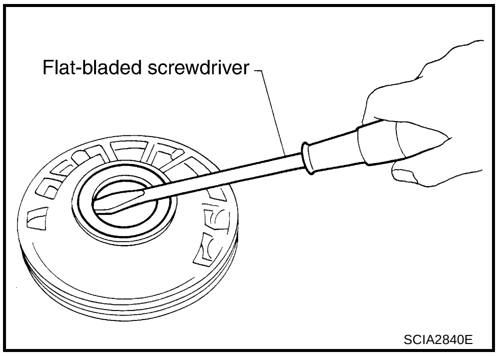

INSPECTION

Oil Pump Housing, Oil Pump Cover, Inner Gear and Outer Gear

- Check for wear or damage.

Side Clearances

- Measure side clearance of inner gear and outer gear in at least four places around each outside edge. Maximum measured values should be within specified positions.

Standard clearance: 0.030 - 0.050 mm (0.0012 - 0.0020 in)

- If clearance is less than standard, select inner gear and outer gear as a set so that clearance is within specifications. Refer to AT-381, "Planetary Carrier and Oil Pump" .
- If clearance is more than standard, replace whole oil pump assembly except oil pump cover.

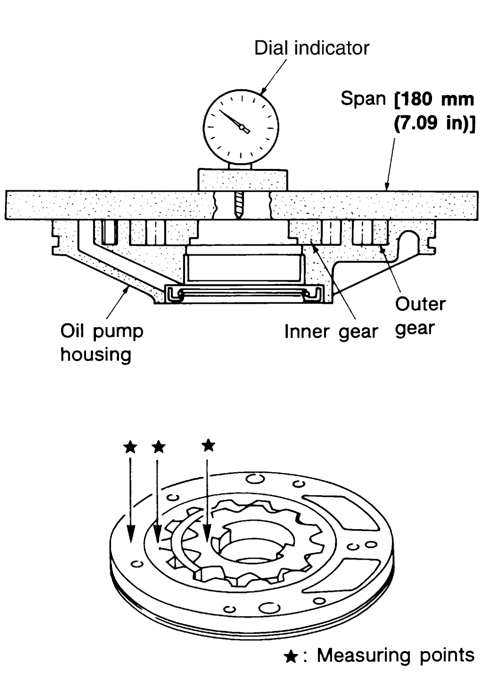

SCIA4957E

- Measure clearance between outer gear and oil pump housing.

Standard clearance: 0.111 - 0.181 mm (0.0044 - 0.0071 in)
Allowable limit: 0.181 mm (0.0071 in)

- If not within allowable limit, replace whole oil pump assembly except oil pump cover.

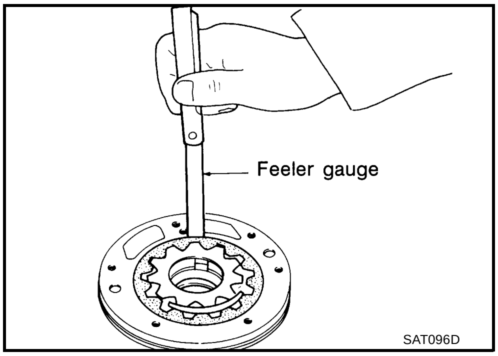

SAT096D

Seal Ring Clearance

- Measure clearance between seal ring and ring groove.

Standard clearance: 0.1 - 0.25 mm (0.0039 - 0.0098 in)
Allowable limit: 0.25 mm (0.0098 in)

- If not within allowable limit, replace oil pump cover assembly.

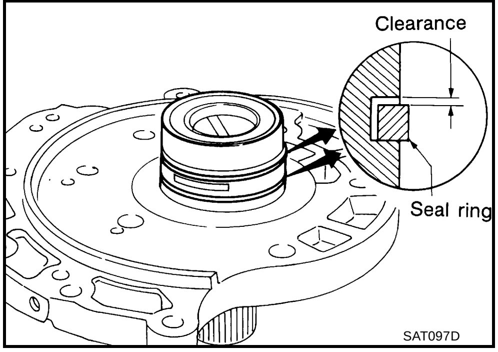

SAT097D

A
B
AT
D
E
F
G
H
I
J
K
L
M

ASSEMBLY

1. Install oil pump housing oil seal on oil pump housing.

   CAUTION:
   - **Do not reuse oil pump housing oil seal.**
   - **Apply ATF to outer surface of oil pump housing oil seal.**

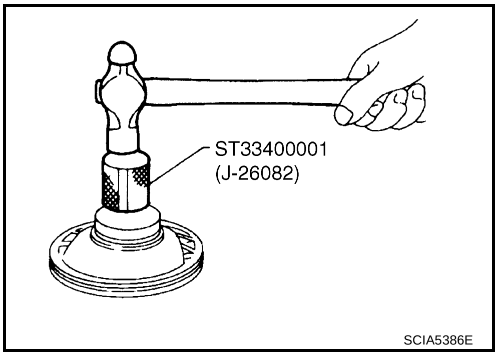

2. Install O-ring on oil pump housing.

   CAUTION:
   - **Do not reuse O-ring.**
   - **Apply ATF to O-ring.**

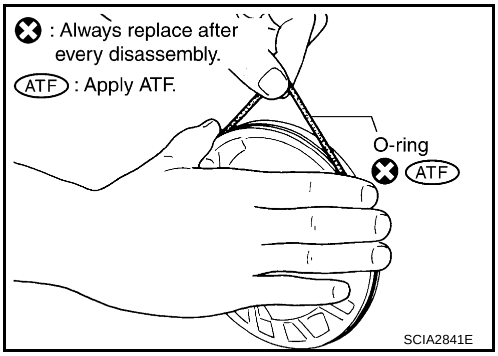

3. Install inner gear and outer gear on oil pump housing.

   CAUTION:
   Be careful of direction of inner gear.

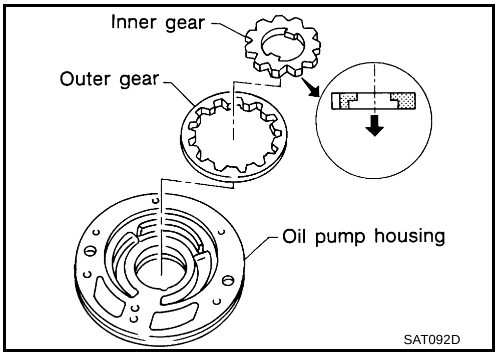

4. Install oil pump cover on oil pump housing.

a. Wrap masking tape around splines of oil pump cover assembly to protect seal. Position oil pump cover assembly on oil pump housing assembly, then remove masking tape.

b. Tighten bolts in a crisscross pattern. Tighten oil pump cover bolts to the specified torque. Refer to AT-290, "COMPONENTS" .

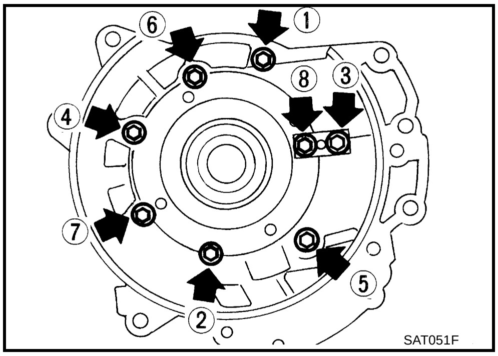

5. Install new seal rings carefully after packing ring groove with petroleum jelly.

   CAUTION:
   - **Do not spread gap of seal rings excessively while installing. The seal rings may be deformed.**
   - **Do not reuse seal rings.**
   - **Apply petroleum jelly to seal rings.**

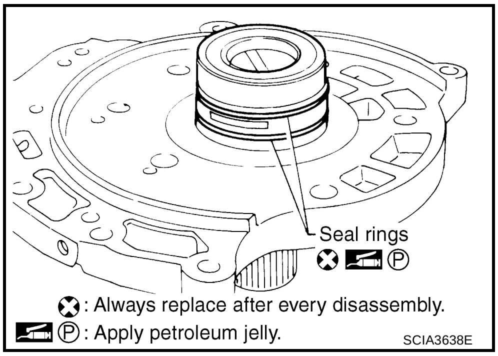

Control Valve Assembly

ACS007VD

COMPONENTS

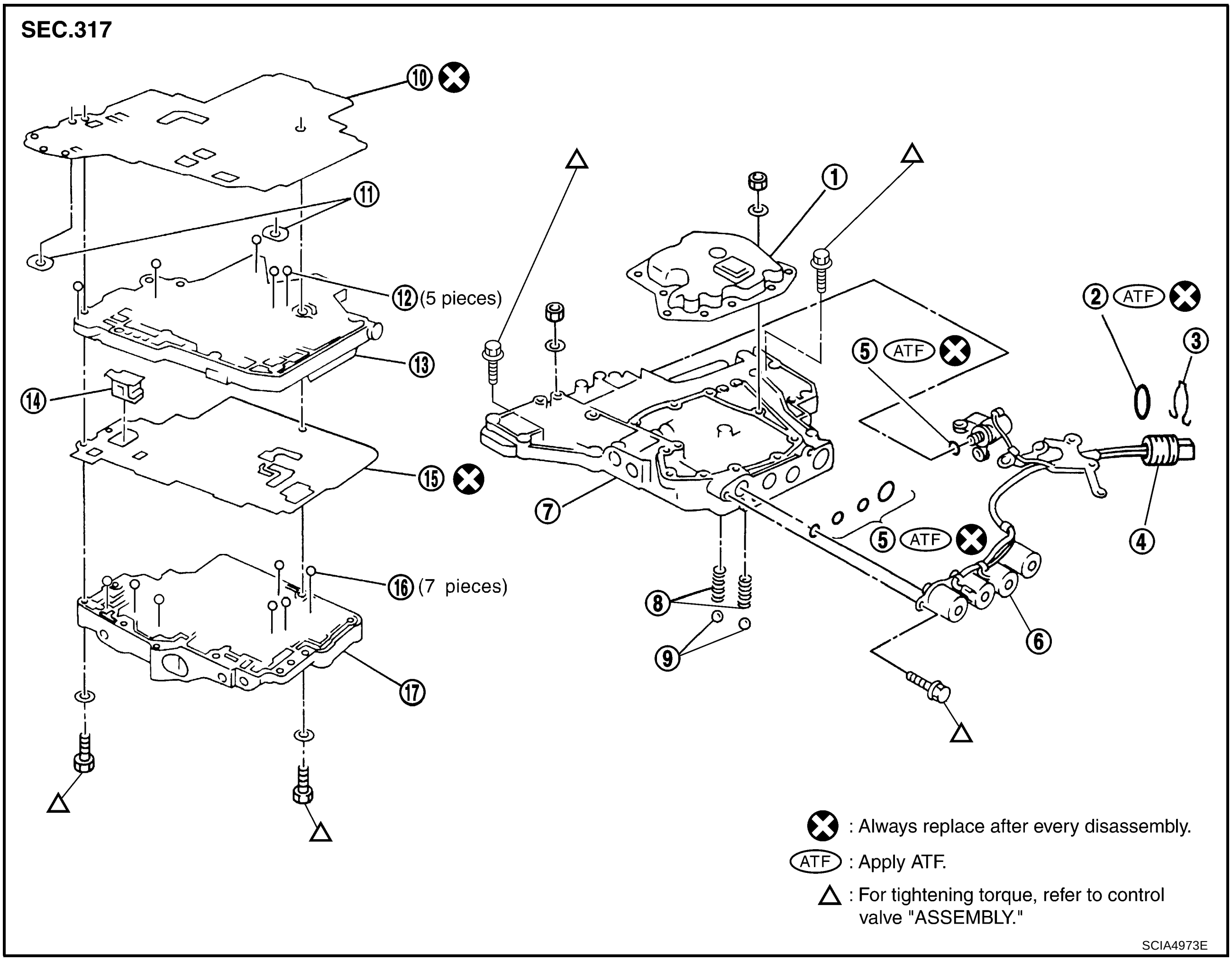

1.	Oil strainer	2.	O-ring	3.	Snap ring
4.	Terminal body	5.	O-ring	6.	Solenoid valve assembly
7.	Control valve lower body	8.	Oil cooler relief valve spring	9.	Check ball
10.	Separating plate	11.	Support plate	12.	Steel ball
13.	Control valve inter body	14.	Pilot filter	15.	Separating plate
16.	Steel ball	17.	Control valve upper body		

DISASSEMBLY

Disassemble control valve upper, inter and lower bodies.

Bolt length, number and location:

Bolt symbol	a	b	c	d	e	f	g
Bolt length "ℓ" mm (in)	13.5 (0.531)	58.0 (2.283)	40.0 (1.575)	66.0 (2.598)	33.0 (1.299)	78.0 (3.071)	18.0 (0.709)
Number of bolts	6	3	6	11	2	2	1

f: Reamer bolt and nut.

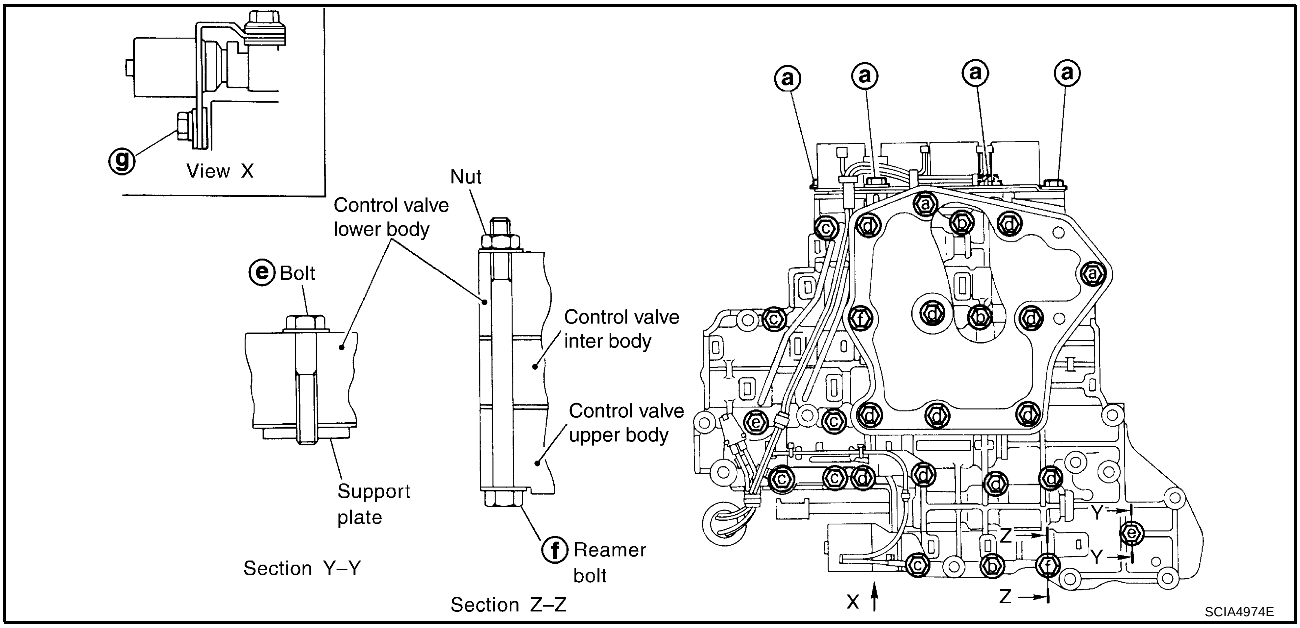

1. Remove bolts **a** , **d** , reamer bolt **f** and nut, and then remove oil strainer from control valve assembly.

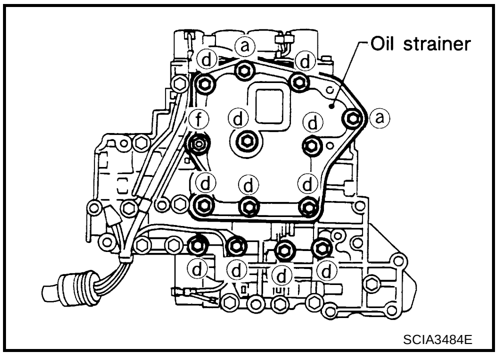

2. Remove bolts **a, c, g** , solenoid valve assembly and line pressure solenoid valve from control valve assembly.

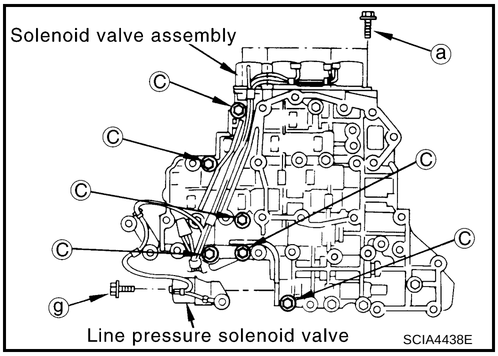

3. Remove O-rings from solenoid valves and terminal body.

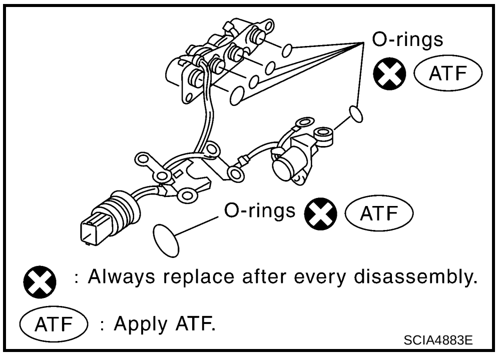

4. Place control valve upper body facedown, and remove bolts **b** , and nut **f** .

   CAUTION:

   Remove bolts with control valve upper body facing down, because control valve upper body and control valve inter body may come off and steel ball may fall and be lost.

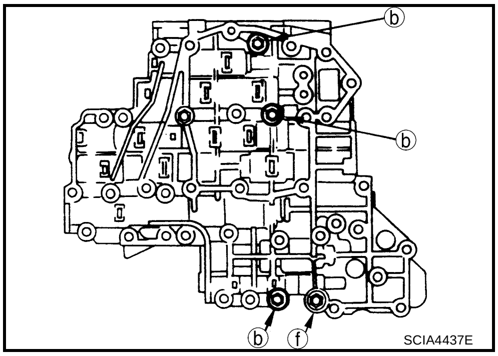

5. Remove control valve lower body from control valve inter body.

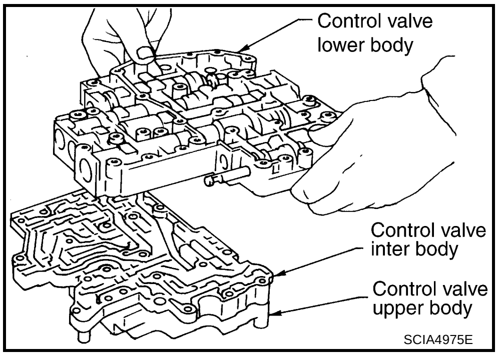

6. Turn over control valve lower body.
7. Remove bolts **e** , separating plate and support plates from control valve lower body.

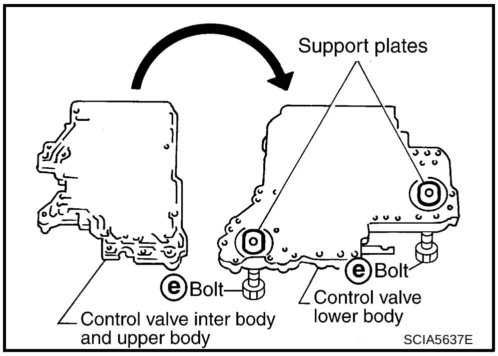

8. Remove check balls and oil cooler relief valve springs from control valve lower body.

   CAUTION:

   Be careful not to lose check balls and oil cooler relief valve springs.

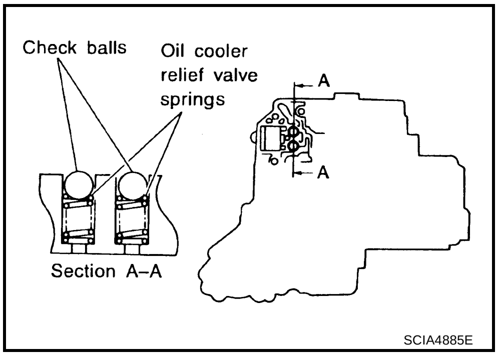

9. Remove control valve inter body from control valve upper body.

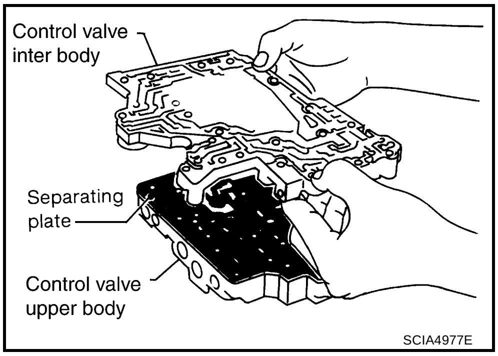

10. Check to see that steel balls are properly positioned in control valve inter body and then remove them.

    CAUTION:

    Be careful not to lose steel balls.

11. Remove pilot filter from control valve upper body.
12. Remove separating plate from control valve upper body.

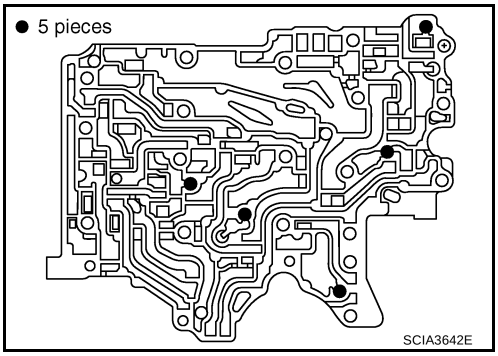

13. Check to see that steel balls are properly positioned in control valve upper body and then remove them.

    CAUTION:

    Be careful not to lose steel balls.

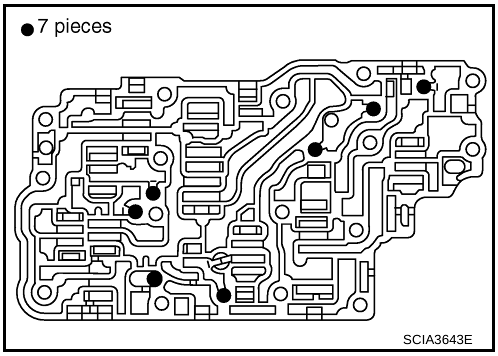

INSPECTION

Control Valve Lower Body and Upper Body

CAUTION:

Be careful not to lose these parts.

- Check to see that retainer plates are properly positioned in control valve lower body.

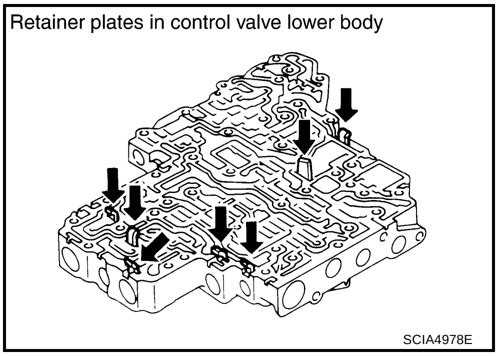

- Check to see that retainer plates are properly positioned in control valve upper body.

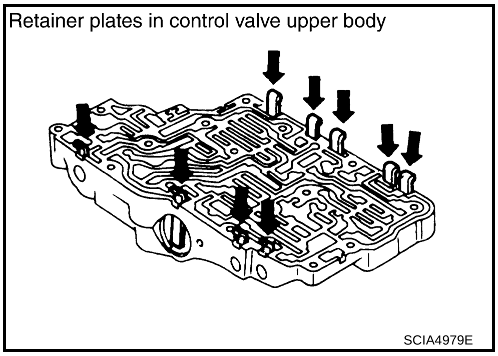

Oil Strainer

- Check wire netting of oil strainer for damage.

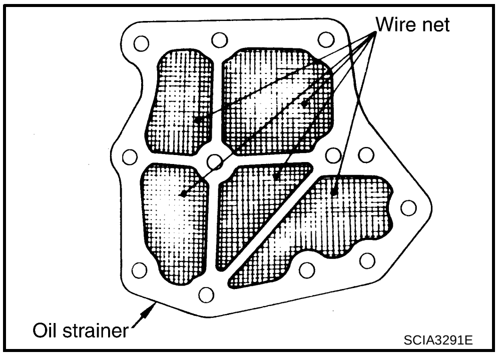

Shift Solenoid Valves “A” and “B”, Line Pressure Solenoid Valve, Torque Converter Clutch Solenoid Valve and Overrun Clutch Solenoid Valve

- Measure resistance.
  - For shift solenoid valve A, refer to AT-161, "Component Inspection" .
  - For shift solenoid valve B, refer to AT-166, "Component Inspection" .
  - For line pressure solenoid valve, refer to AT-156, "Component Inspection" .
  - For torque converter clutch solenoid valve, refer to AT-142, "Component Inspection" .
  - For overrun clutch solenoid valve, refer to AT-176, "Component Inspection" .
  - For A/T fluid temperature sensor, refer to AT-105, "Component Inspection" .

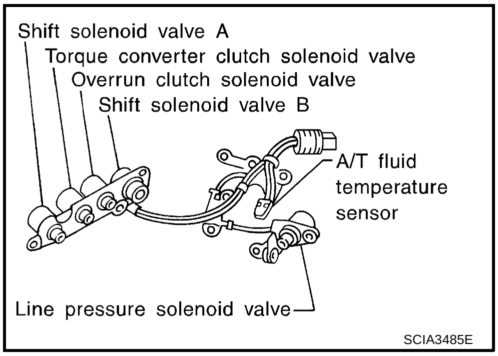

Oil Cooler Relief Valve Springs

- Check springs for damage or deformation.
- Measure free length and outer diameter. Refer to AT-377, "Control Valves" .

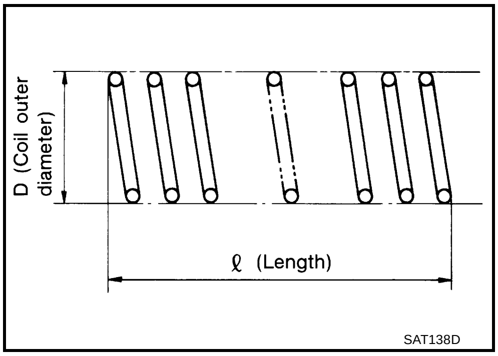

A B AT D E F G H I J K L M

ASSEMBLY

1. Install control valve upper, inter and lower body.

a. Place oil circuit of control valve upper body face up. Install steel balls in their proper positions.

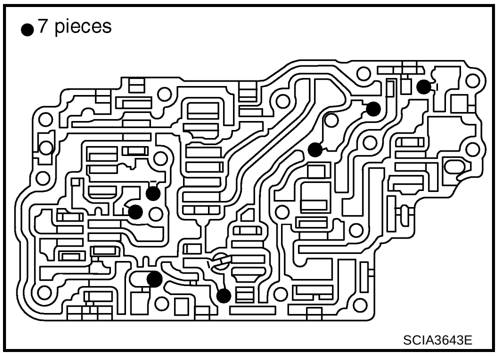

SCIA3643E

b. Install reamer bolts **f** from bottom of control valve upper body. Using reamer bolts as guides, install separating plate as a set.

CAUTION:

Do not reuse separating plate.

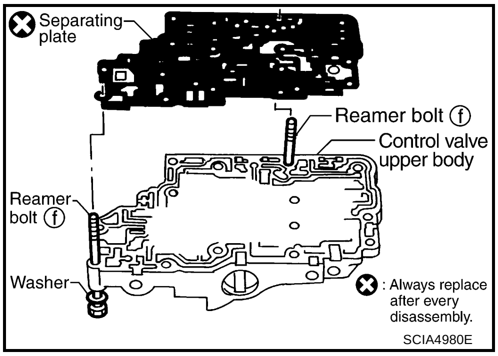

SCIA4980E

c. Install pilot filter.

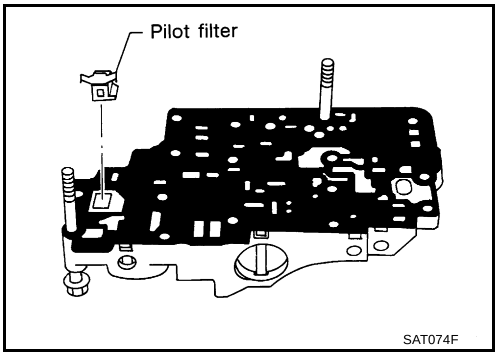

SAT074F

d. Place control valve inter body as shown in the figure (side of control valve lower body face up). Install steel balls in their proper positions.

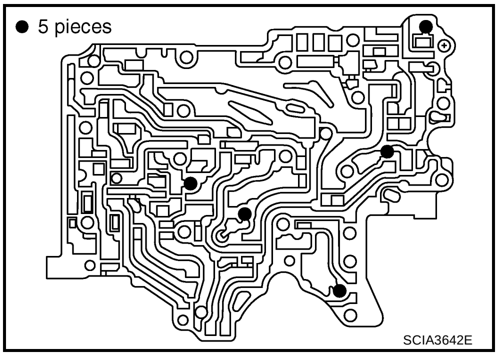

SCIA3642E

e. Install control valve inter body on control valve upper body using reamer bolts **f** as guides.

CAUTION:

Be careful not to dislocate or drop steel balls.

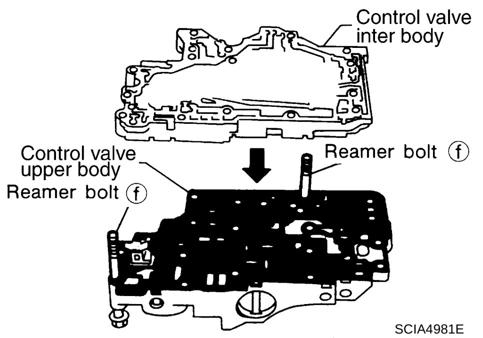

f. Install check balls and oil cooler relief valve springs in their proper positions in control valve lower body.

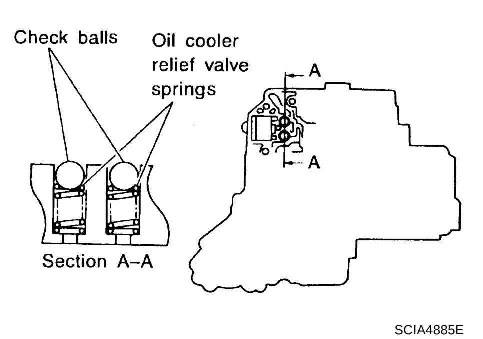

g. Install bolts **e** from bottom of control valve lower body. Using bolts **e** as guides, install separating plate as a set.

CAUTION:

Do not reuse separating plate.

h. Install support plates on control valve lower body.

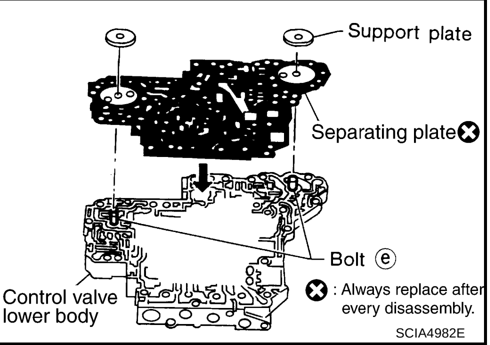

i. Install control valve lower body on control valve inter body using reamer bolts **f** as guides and tighten reamer bolts **f** slightly.

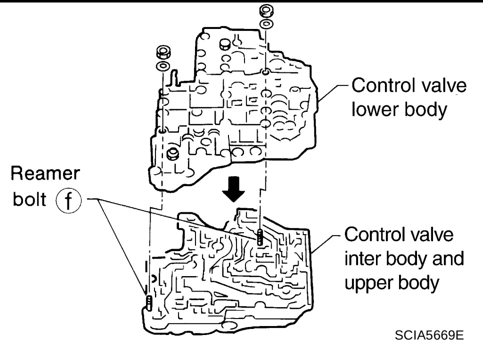

2. Install O-rings on solenoid valves and terminal body.

CAUTION:

- **Do not reuse O-rings.**
- **Apply ATF to O-rings.**

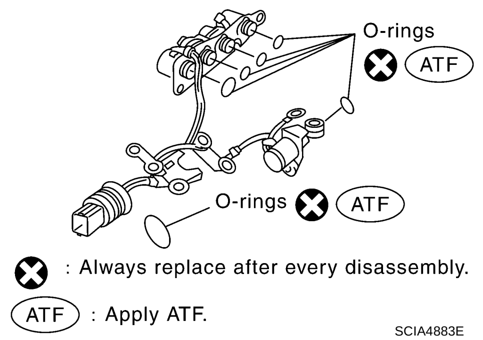

3. Install and tighten bolts.

Bolt length, number and location:

Bolt symbol	a	b	c	d	e	f	g
Bolt length "ℓ" mm (in)	13.5 (0.531)	58.0 (2.283)	40.0 (1.575)	66.0 (2.598)	33.0 (1.299)	78.0 (3.071)	18.0 (0.709)
Number of bolts	6	3	6	11	2	2	1
Tightening torque N·m (kg-m, in-lb)	7.8 (0.80, 69)				4.0 (0.41, 35)	7.8 (0.80, 69)	

f: Reamer bolt and nut.

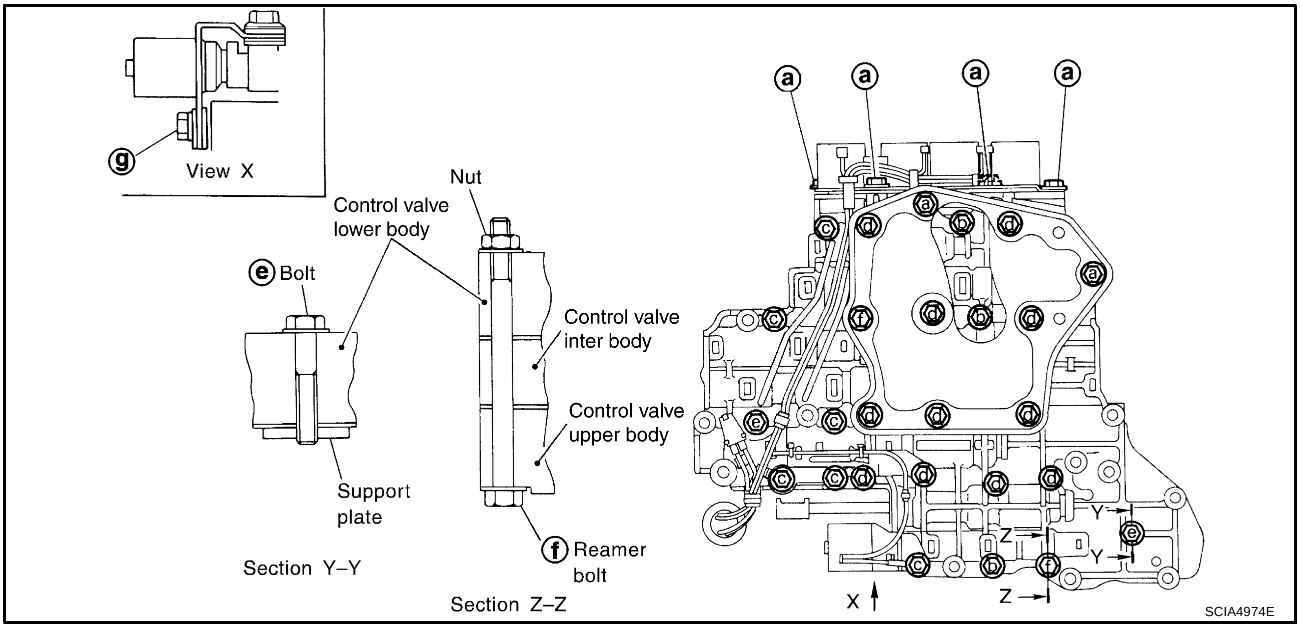

a. Install and tighten bolts **b** and nut **f** to the specified torque.

: 7.8 N·m (0.80 kg-m, 69 in-lb)

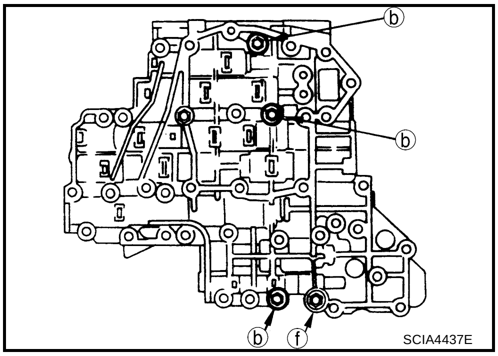

b. Install solenoid valve assembly and line pressure solenoid valve on control valve assembly.

c. Tighten bolts **a** , **c** and **g** to the specified torque.

: 7.8 N·m (0.80 kg-m, 69 in-lb)

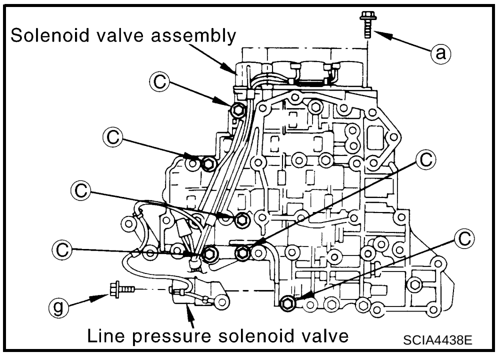

d. Set oil strainer, then tighten bolts **a** , **d** and nut **f** to the specified torque.

: 7.8 N·m (0.80 kg-m, 69 in-lb)

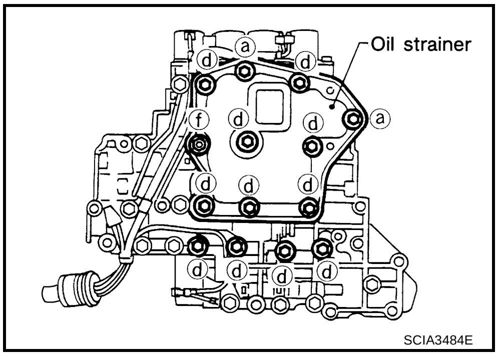

e. Tighten bolts **e** to the specified torque.

: 4.0 N·m (0.41 kg-m, 35 in-lb)

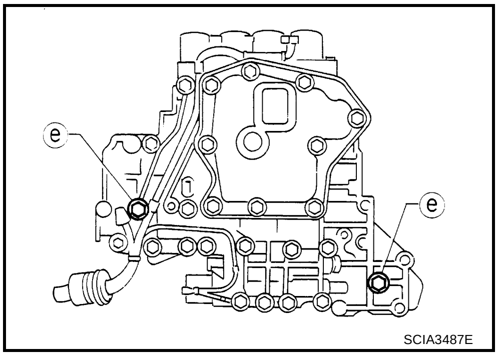

Control Valve Upper Body

ACS007VE

COMPONENTS

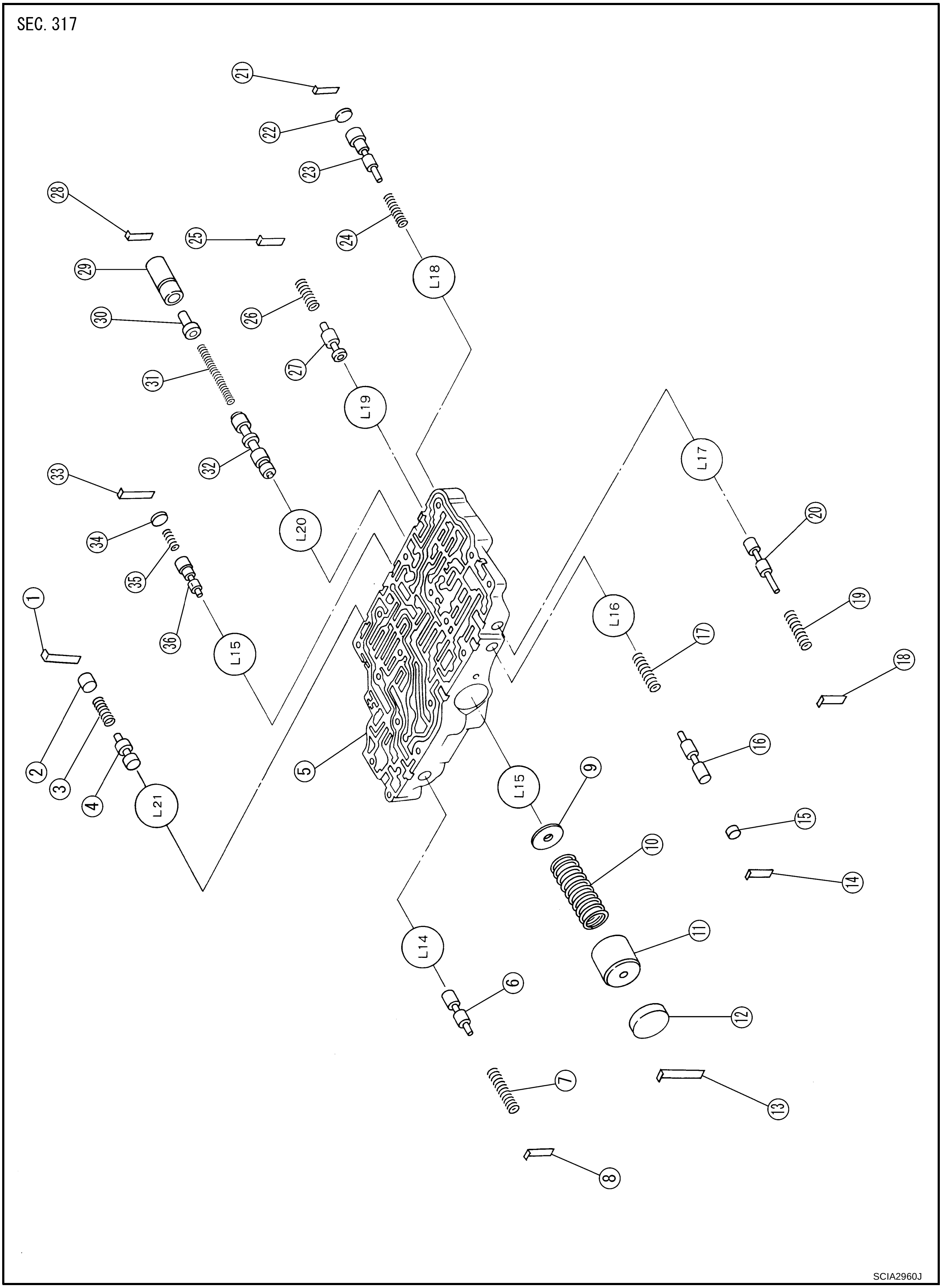

1. Retainer plate
2. Plug
3. Cooler check valve spring
4. Cooler check valve
5. Control valve upper body
6. Pilot valve
7. Pilot valve spring
8. Retainer plate
9. 1-2 accumulator retainer plate
10. 1-2 accumulator piston spring
11. 1-2 accumulator piston
12. Plug
13. Retainer plate
14. Retainer plate
15. Plug
16. 1st reducing valve
17. 1st reducing valve spring
18. Retainer plate
19. 3-2 timing valve spring
20. 3-2 timing valve
21. Retainer plate
22. Plug
23. Overrun clutch reducing valve
24. Overrun clutch reducing valve spring
25. Retainer plate
26. Torque converter relief valve spring
27. Torque converter relief valve
28. Retainer plate
29. Sleeve
30. Plug
31. Torque converter clutch control valve spring
32. Torque converter clutch control valve
33. Retainer plate
34. Plug
35. 1-2 accumulator valve spring
36. 1-2 accumulator valve

DISASSEMBLY

1. Remove valves at retainer plates.

CAUTION:

Do not use a magnetic pick-up tool.

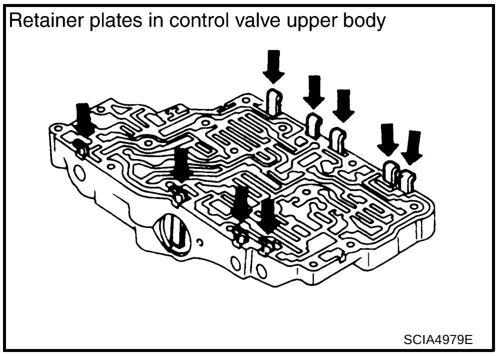

a. Use a screwdriver to remove retainer plates.

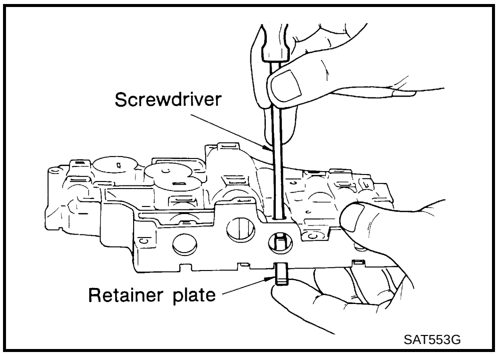

b. Remove retainer plates while holding spring, plugs or sleeves.

CAUTION:

Remove plugs slowly to prevent internal parts from jumping out.

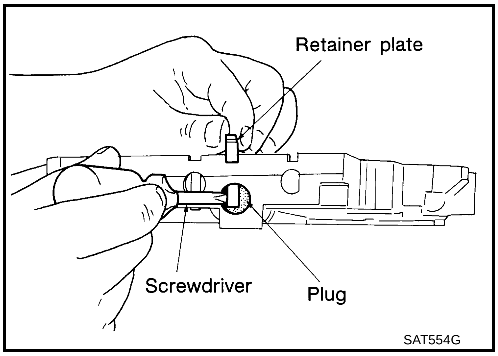

c. Place mating surface of valve body face down, and remove internal parts.

CAUTION:

- **If a valve is hard to remove, place valve body face down and lightly tap it with a soft hammer.**
- **Be careful not to drop or damage valves and sleeves.**

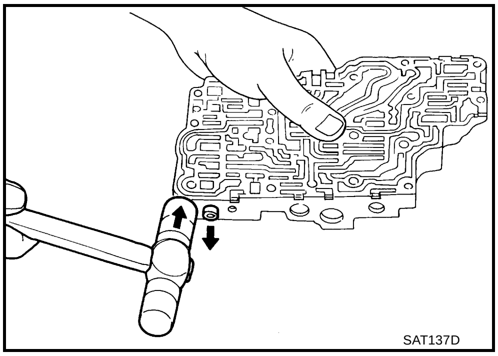

SAT137D

INSPECTION

Valve Springs

- Measure free length and outer diameter of each valve springs. Also check for damage or deformation. Refer to AT-377, "Control Valves" .
- Replace valve springs if deformed or fatigued.

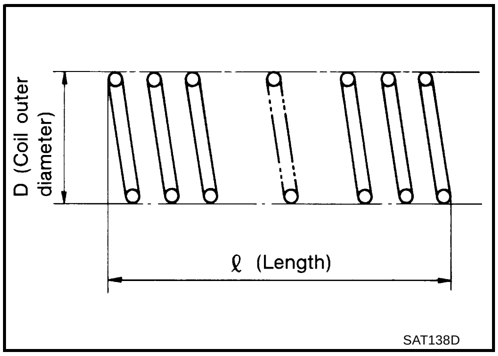

SAT138D

Control Valves

- Check sliding surfaces of valves, sleeves and plugs.

ASSEMBLY

CAUTION:

- **Apply ATF to all components before installation.**
- **Lay control valve body down when installing valves. Do not stand control valve body upright.**

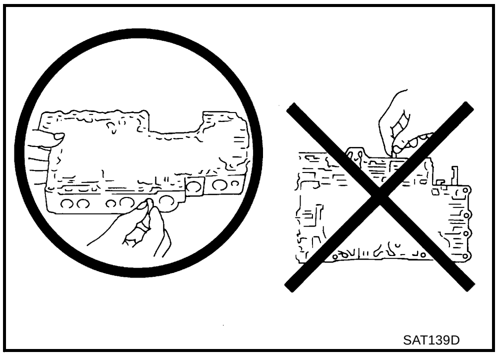

SAT139D

- Lubricate control valve body and all valves with ATF. Install control valves by sliding them carefully into their bores.

  CAUTION:

  - **Install each control valve one by one.**
  - **Install control valves after checking, because some of them are similar.**
  - **Be careful not to scratch or damage valve body.**

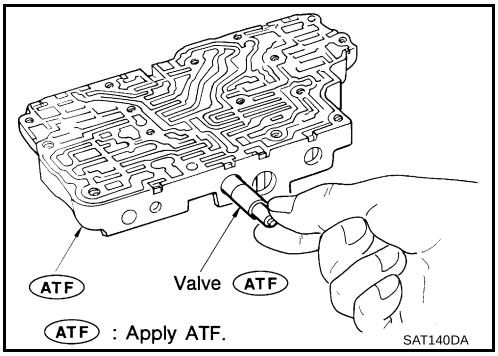

SAT140DA

A B AT D E F G H I J K L M

– Wrap a small screwdriver with vinyl tape and use it to insert valves into their proper positions.

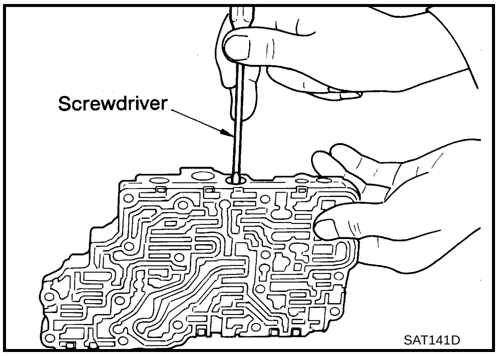

1-2 Accumulator Valve

- Install 1-2 accumulator valve. Align 1-2 accumulator retainer plate from opposite side of control valve body.
- Install 1-2 accumulator piston spring, 1-2 accumulator valve spring, 1-2 accumulator piston and plugs.

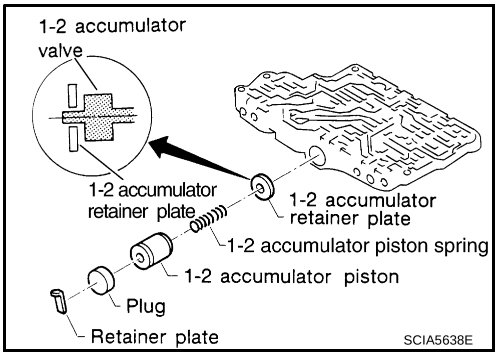

- Install retainer plates.

– While pushing plugs (with 1-2 accumulator piston spring and 1-2 accumulator valve spring), install retainer plate.

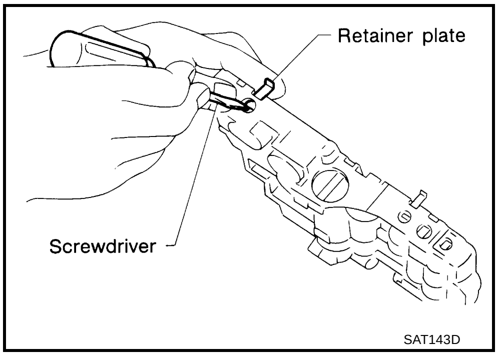

Retainer Plates (Control Valve Upper Body)

- Install proper retainer plates. Refer to AT-304, "COMPONENTS" .

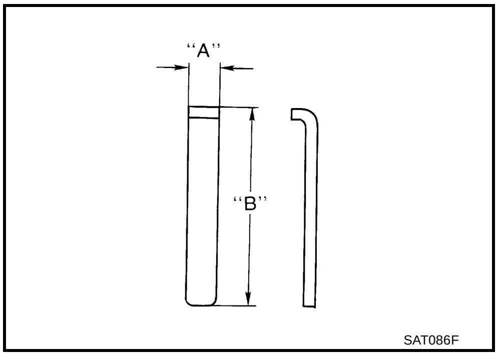

Unit: mm (in)

Location	Name of control valve	Width A	Length B
L14	Pilot valve	6.0 (0.236)	21.5 (0.846)
L16	1st reducing valve		
L17	3-2 timing valve		
L19	Torque converter relief valve		
L15	1-2 accumulator valve		40.5 (1.594)
	1-2 accumulator piston		
L18	Overrun clutch reducing valve		24.0 (0.945)
L21	Cooler check valve		
L20	Torque converter clutch control valve		28.0 (1.102)

Control Valve Lower Body

ACS007VF

COMPONENTS

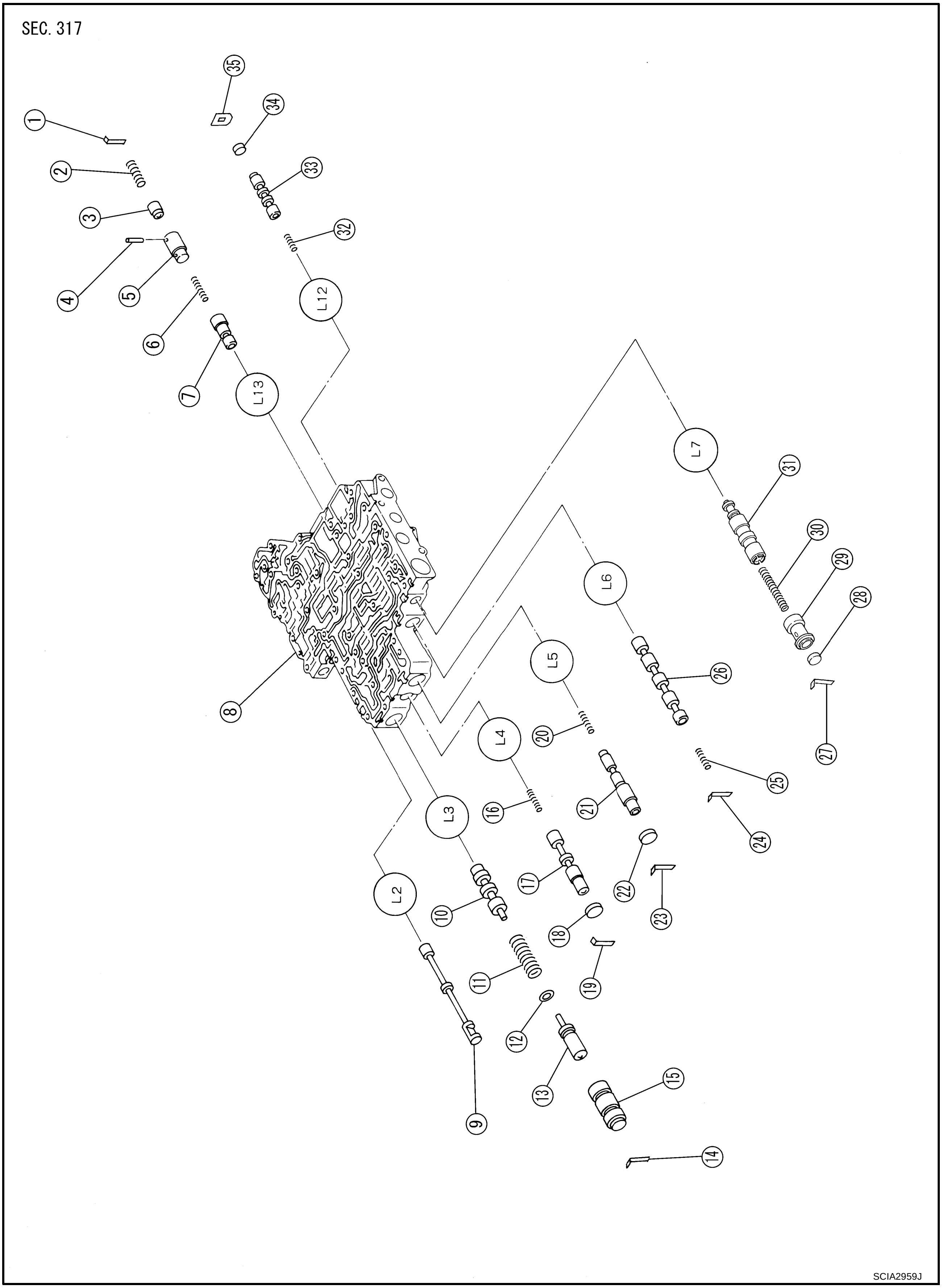

1.	Retainer plate	2.	Pressure modifier piston spring	3.	Pressure modifier piston
4.	Parallel pin	5.	Sleeve	6.	Pressure modifier valve spring
7.	Pressure modifier valve	8.	Control valve lower body	9.	Manual valve
10.	Pressure regulator valve	11.	Pressure regulator valve spring	12.	Spring seat
13.	Plug	14.	Retainer plate	15.	Sleeve
16.	Overrun clutch control valve spring	17.	Overrun clutch control valve	18.	Plug
19.	Retainer plate	20.	Accumulator control valve spring	21.	Accumulator control valve
22.	Plug	23.	Retainer plate	24.	Retainer plate
25.	Shift valve A spring	26.	Shift valve A	27.	Retainer plate
28.	Plug	29.	Shuttle plug	30.	Shuttle valve spring
31.	Shuttle valve	32.	Shift valve B spring	33.	Shift valve B
34.	Plug	35.	Retainer plate		

DISASSEMBLY

- Remove valves at retainer plates.
  For removal procedures, refer to AT-305, "DISASSEMBLY" .

Retainer plates in control valve lower body

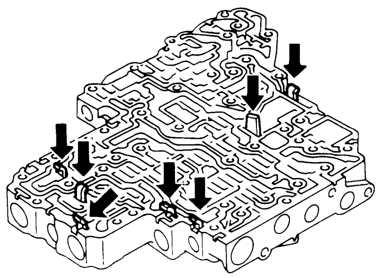

SCIA4978E

INSPECTION

Valve Springs

- Check each valve springs for damage or deformation. Also measure free length and outer diameter. Refer to AT-377, "Control Valves" .
- Replace valve springs if deformed or fatigued.

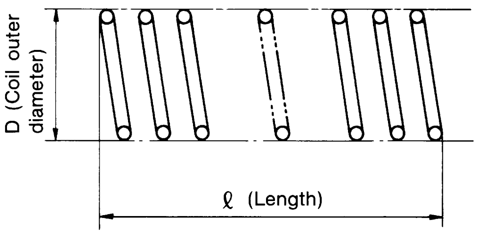

SAT138D

Control Valves

- Check sliding surfaces of control valves, sleeves and plugs for damage.

ASSEMBLY

CAUTION:

- **Apply ATF to all components before installation.**
- **Lay control valve body down when installing valves. Do not stand control valve body upright.**

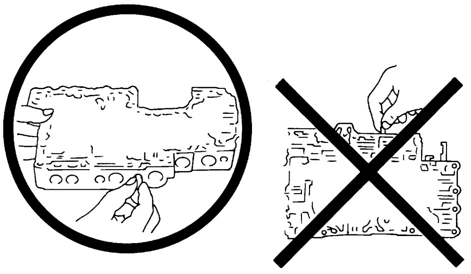

SAT139D

- Install control valves.
  For installation procedures, refer to AT-306, "ASSEMBLY" .

Retainer plates in control valve lower body

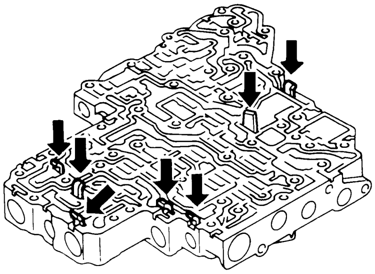

SCIA4978E

Retainer Plates (Control Valve Lower Body)

- Install proper retainer plates. Refer to AT-308, "COMPONENTS" .

Unit: mm (in)

Location	Name of control valve and plug	Width A	Length B	Type
L3	Pressure regulator valve	6.0 (0.236)	28.0 (1.102)	I
L5	Accumulator control valve			
L6	Shift valve A			
L4	Overrun clutch control valve			
L13	Pressure modifier valve			
L7	Shuttle valve			
L12	Shift valve B	17.0 (0.669)	24.0 (0.945)	II

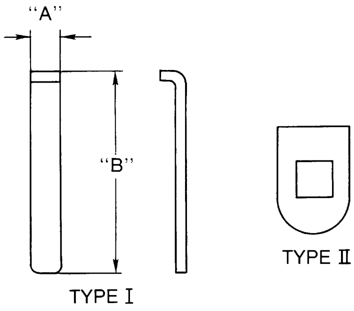

SAT089F

Reverse Clutch

ACS007VG

COMPONENTS

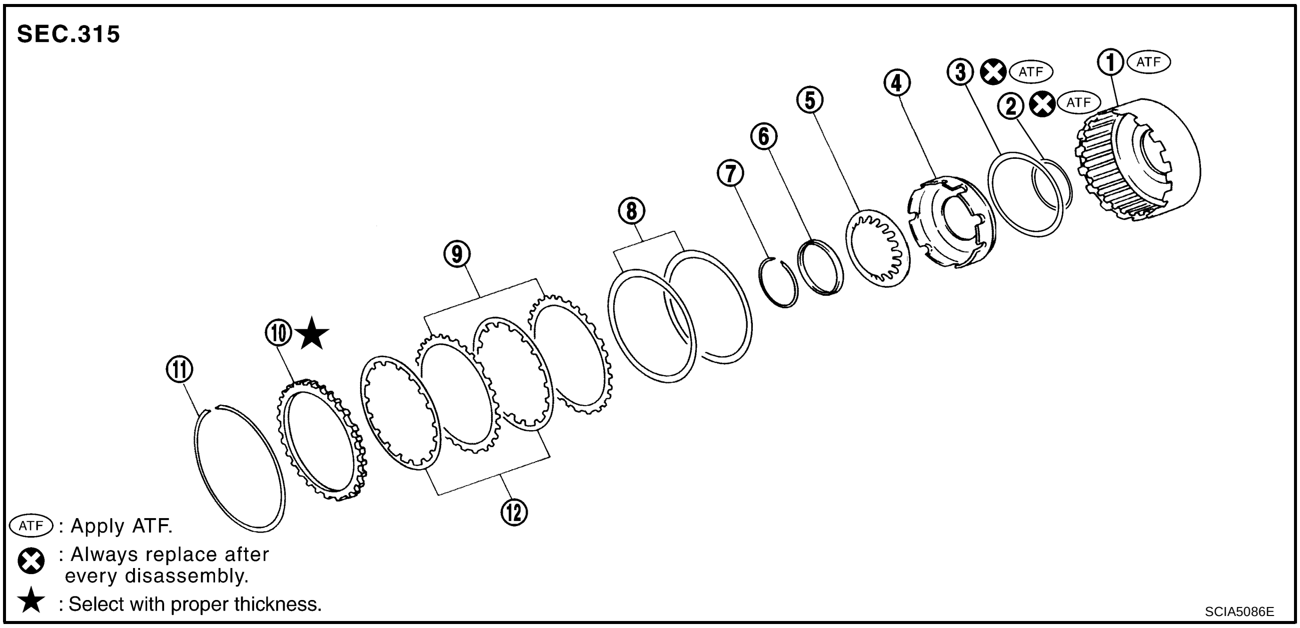

1. Reverse clutch drum	2. D-ring	3. Seal ring
4. Reverse clutch piston	5. Return spring	6. Spring retainer
7. Snap ring	8. Dish plate	9. Driven plate
10. Retaining plate	11. Snap ring	12. Drive plate

DISASSEMBLY

1. Check operation of reverse clutch.
   a. Install seal ring onto drum support of oil pump cover and install reverse clutch assembly. Apply compressed air to oil hole.
   b. Check to see that retaining plate moves to snap ring.
   c. If retaining plate does not contact snap ring:
      - D-ring might be damaged.
      - Seal ring might be damaged.
      - Fluid might be leaking past piston check ball.

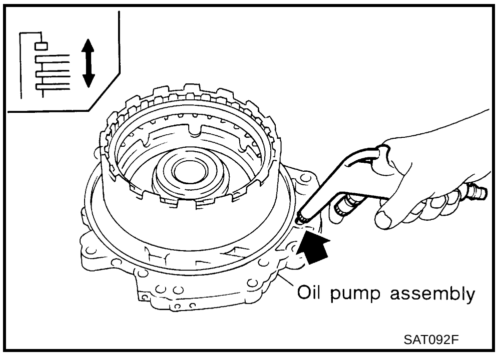

2. Remove snap ring with flat-bladed screwdriver.
3. Remove drive plates, driven plates, retaining plate, and dish plates.

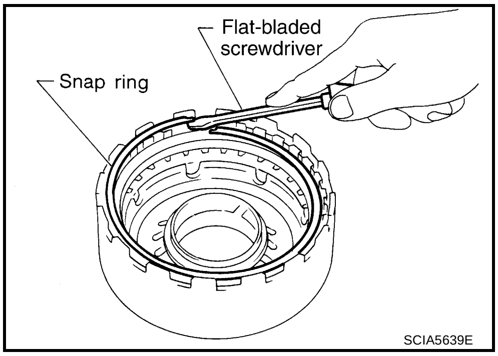

4. Set SST on spring retainer and remove snap ring from reverse clutch drum while compressing return spring.

   CAUTION:
   - **Set SST directly over return spring.**
   - **Do not expand snap ring excessively.**
5. Remove spring retainer and return spring.

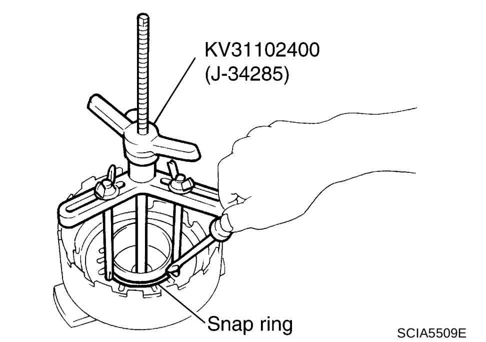

SCIA5509E

6. Remove reverse clutch piston from reverse clutch drum by turning it.
7. Remove D-ring and seal ring from reverse clutch piston.

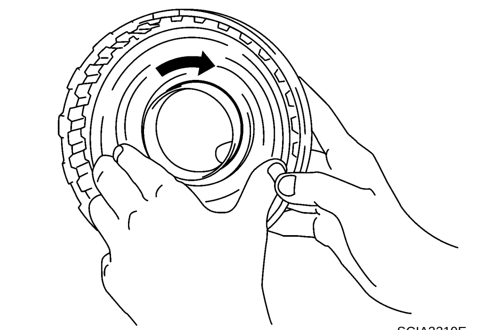
SCIA3319E

INSPECTION

Reverse Clutch Snap Rings, Spring Retainer and Return Spring

- Check for deformation, fatigue or damage.
  If necessary, replace.

Reverse Clutch Drive Plates

- Check facing for burns, cracks or damage.
- Measure thickness of facing.

Thickness of drive plate

Standard:	**1.6 mm (0.063 in)**
Wear limit:	**1.4 mm (0.055 in)**

- If not within wear limit, replace.

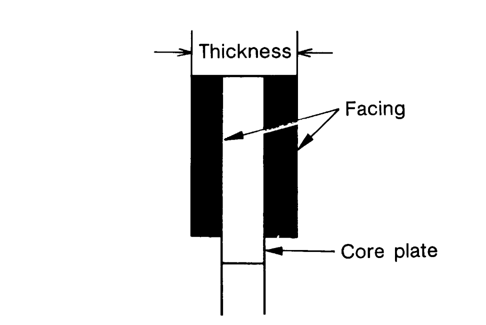

SAT162D

Reverse Clutch Dish Plates

- Check for deformation or damage.
- Measure thickness of dish plate.

Thickness of dish plate: 3.08 mm (0.1213 in)

- If deformed or fatigued, replace.

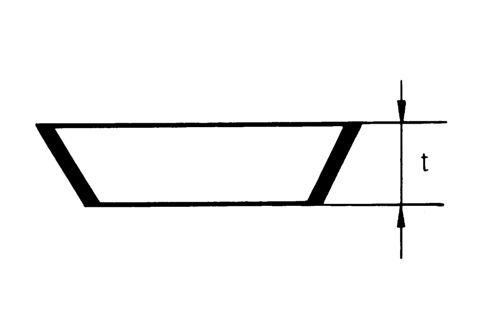

SAT163D

Reverse Clutch Piston

- Make sure that check balls are not fixed.
- Apply compressed air to check ball oil hole opposite return spring. Make sure there is no air leakage.
- Apply compressed air to oil hole on return spring side to make sure that air leaks past ball.

ASSEMBLY

1. Install D-ring and seal ring on reverse clutch piston.

   CAUTION:
   - **Do not reuse D-ring and seal ring.**
   - **Apply ATF to D-ring and seal ring.**
   - **Be careful with the direction of seal ring.**

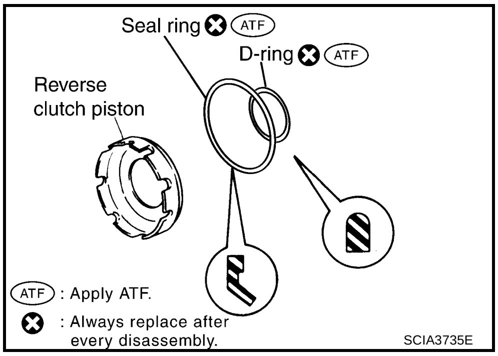

2. Install reverse clutch piston by turning it slowly.

   CAUTION:
   Apply ATF to inner surface of reverse clutch drum.

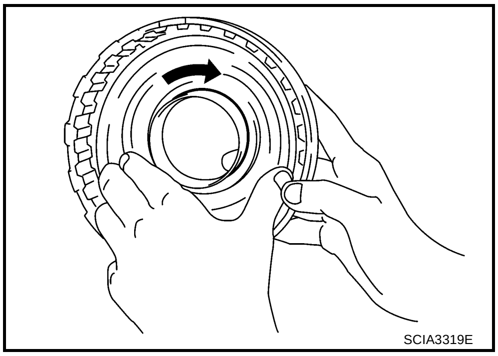

3. Install return spring and spring retainer on reverse clutch piston.
4. Set SST on spring retainer and install snap ring while compressing return spring.

   CAUTION:
   - **Set SST directly over return spring.**
   - **Do not expand snap ring excessively.**

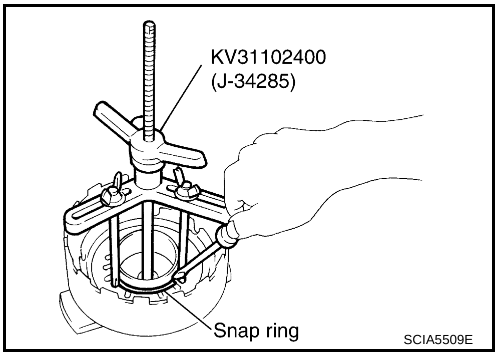

5. Install drive plates, driven plates, retaining plate and dish plates. Refer to AT-378, "REVERSE CLUTCH" .

CAUTION:

Be careful with the order and the direction of plates.

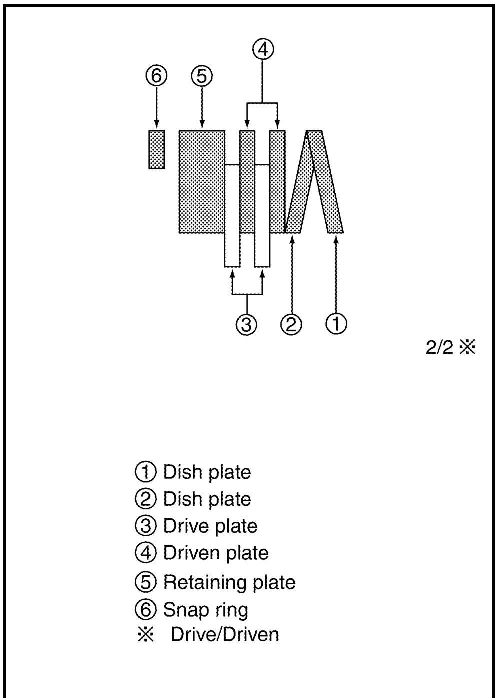

SCIA4888E

NOTE:

Install two dish plates fitting each installation direction with reverse clutch drum groove displaced slightly.

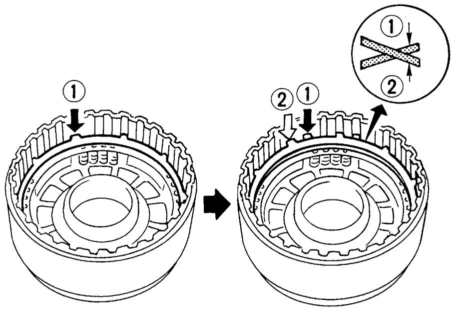

SAT170D

6. Install snap ring.

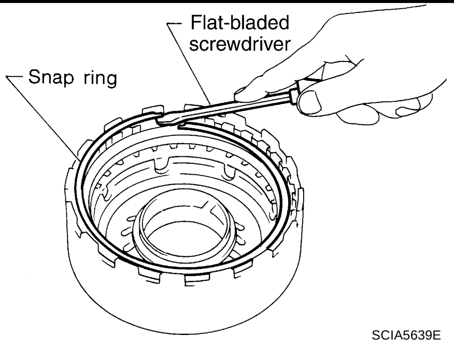

SCIA5639E

7. Measure clearance between retaining plate and snap ring. If not within allowable limit, select proper retaining plate. Refer to AT-378, "REVERSE CLUTCH" .

Specified clearance

Standard:	**0.5 - 0.8 mm (0.020 - 0.031 in)**
Allowable limit:	**1.2 mm (0.047 in)**

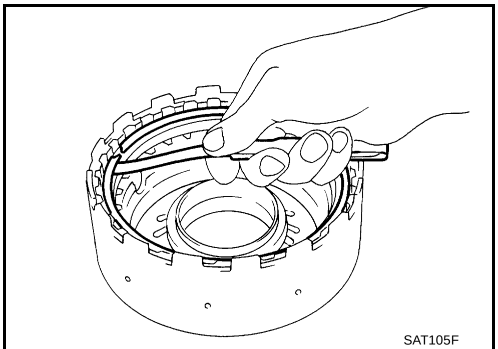
SAT105F

8. Check operation of reverse clutch. Refer to AT-311, "DISASSEMBLY" .

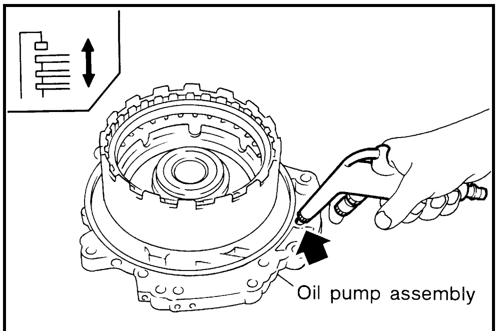

SAT092F

High Clutch

ACS007VH

COMPONENTS

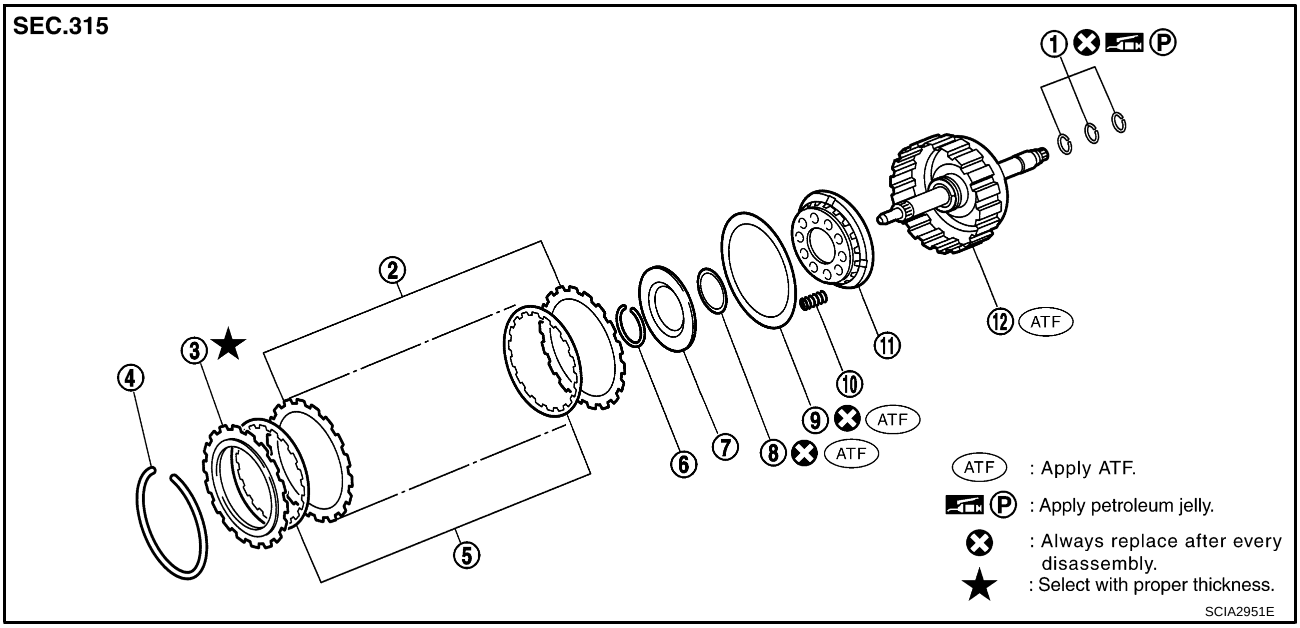

1.	Seal ring	2.	Driven plate	3.	Retaining plate
4.	Snap ring	5.	Drive plate	6.	Snap ring
7.	Spring retainer	8.	D-ring	9.	D-ring
10.	Return spring	11.	High clutch piston	12.	Input shaft assembly (high clutch drum)

DISASSEMBLY

1. Check operation of high clutch.
   a. Apply compressed air to oil hole of input shaft assembly (high clutch drum) with nylon cloth.

      CAUTION:
      Stop up hole on opposite side of input shaft assembly (high clutch drum) with nylon cloth.
   b. Check to see that retaining plate moves to snap ring.
   c. If retaining plate does not contact snap ring:
      - Fluid might be leaking past piston check ball.

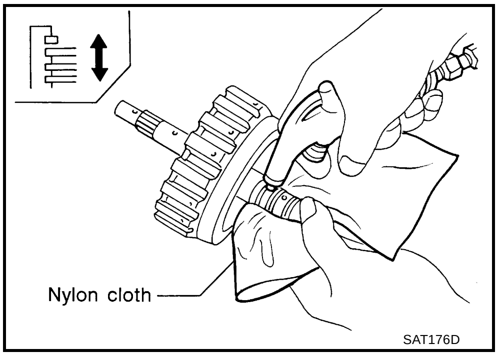

2. Remove seal rings from input shaft assembly (high clutch drum).

   CAUTION:
   Always replace seal rings when removed.

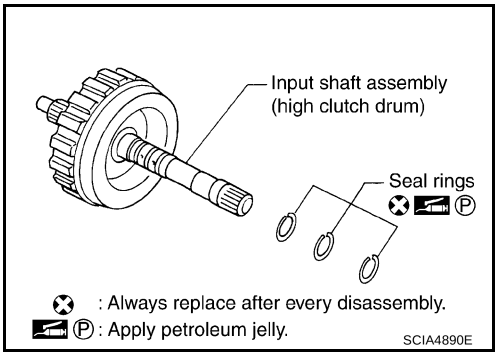

3. Remove snap ring with flat-bladed screwdriver.
4. Remove drive plates, driven plates and retaining plate.

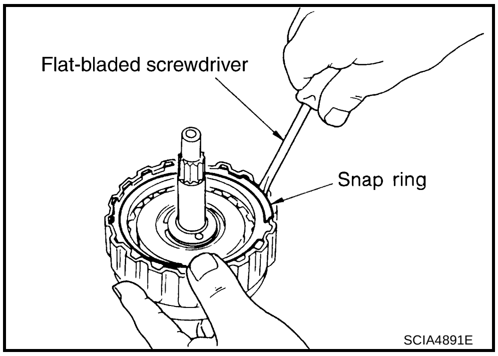

5. Set SST on spring retainer and remove snap ring from input shaft assembly (high clutch drum) while compressing return springs.

   CAUTION:
   - **Set SST directly over springs.**
   - **Do not expand snap ring excessively.**
6. Remove spring retainer and return springs.

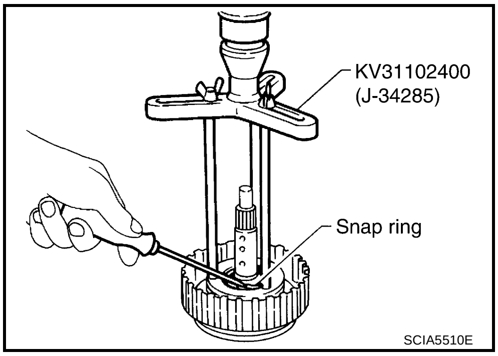

7. Remove high clutch piston from input shaft assembly (high clutch drum) by turning it.

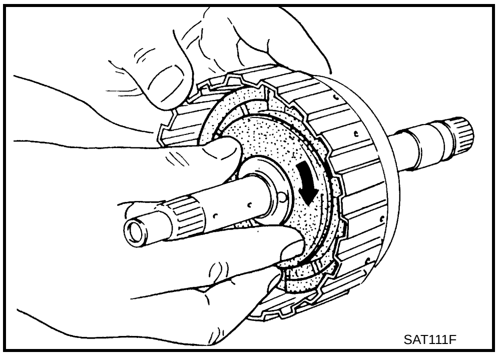

8. Remove D-rings from high clutch piston.

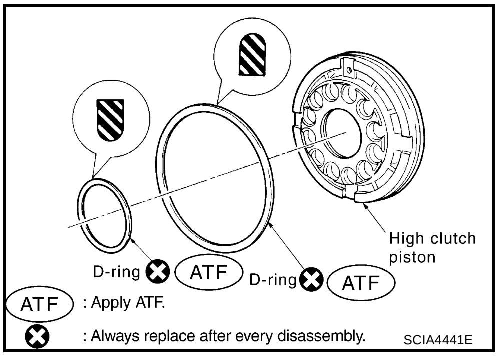

INSPECTION

High Clutch Snap Rings, Spring Retainer and Return Springs

- Check for deformation, fatigue or damage.
  If necessary, replace.
- **When replacing spring retainer and return springs, replace them as a set.**

High Clutch Drive Plates

- Check facing for burns, cracks or damage.
- Measure thickness of facing.

Thickness of drive plate

Standard:	**1.6 mm (0.063 in)**
Wear limit:	**1.4 mm (0.055 in)**

- If not within wear limit, replace.

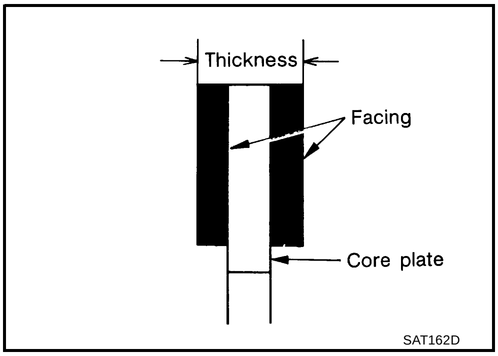

SAT162D

High Clutch Piston

- Make sure that check balls are not fixed.
- Apply compressed air to check ball oil hole opposite return spring. Make sure there is no air leakage.
- Apply compressed air to oil hole on return spring side to make sure that air leaks past ball.

Seal Ring Clearance

- Install new seal rings onto input shaft assembly (high clutch drum).
- Measure clearance between seal ring and ring groove.

Standard clearance:	**0.08 - 0.23 mm (0.0031 - 0.0091 in)**
Allowable limit:	**0.23 mm (0.0091 in)**

- If not within allowable limit, replace input shaft assembly (high clutch drum).

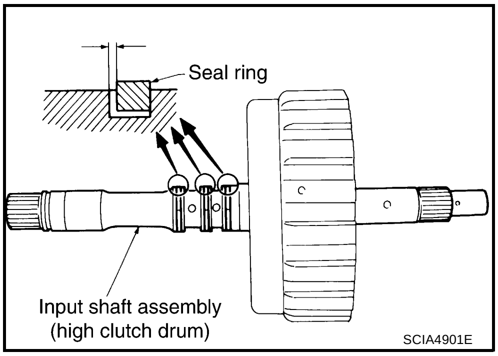

SCIA4901E

ASSEMBLY

1. Install D-rings on high clutch piston.

   CAUTION:
   - **Apply ATF to D-rings.**
   - **Do not reuse D-rings.**

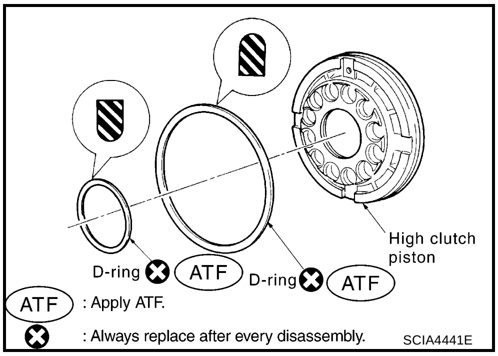

SCIA4441E

2. Install high clutch piston by turning it slowly.

   CAUTION:

   Apply ATF to inner surface of input shaft assembly (high clutch drum).

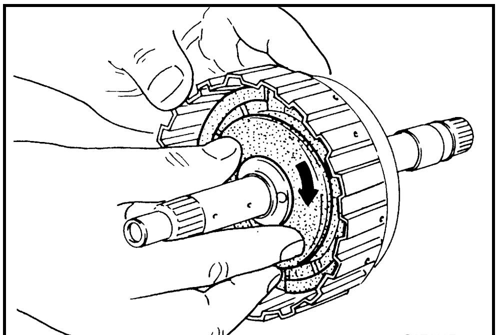
SAT111F

3. Install return springs and spring retainer on high clutch piston.

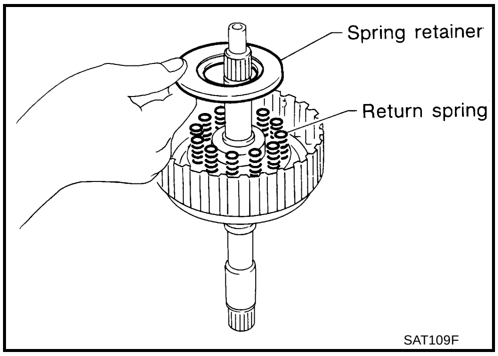

4. Set SST on spring retainer and install snap ring while slowly compressing return springs.

CAUTION:
- **Set SST directly over return springs.**
- **Do not expand snap ring excessively.**

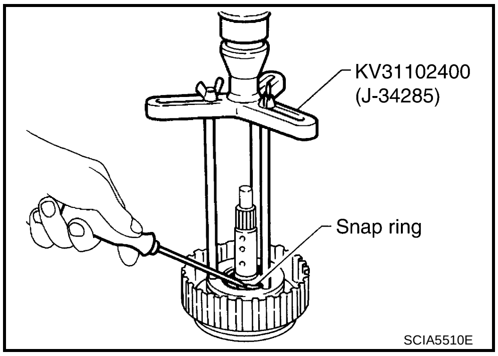

CAUTION:
Do not align snap ring gap with spring retainer stopper.

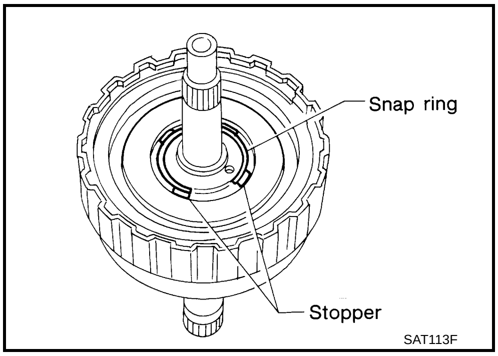

5. Install drive plates, driven plates and retaining plate. Refer to AT-378, "HIGH CLUTCH" .

CAUTION:
Be careful with the order and the direction of plates.

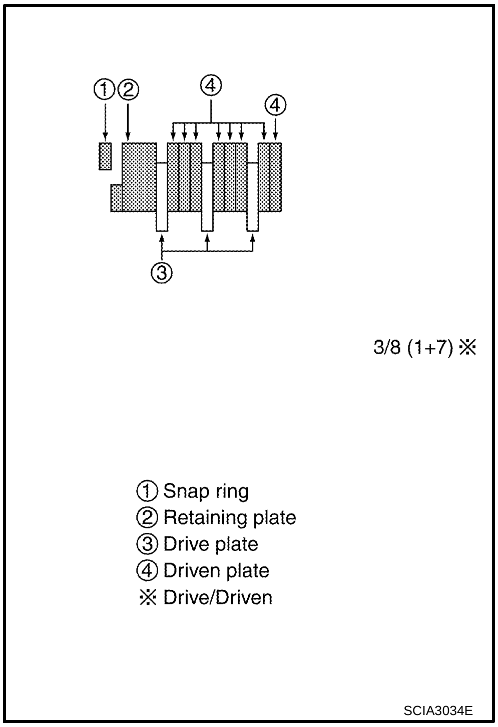

6. Install snap ring with flat-bladed screwdriver.

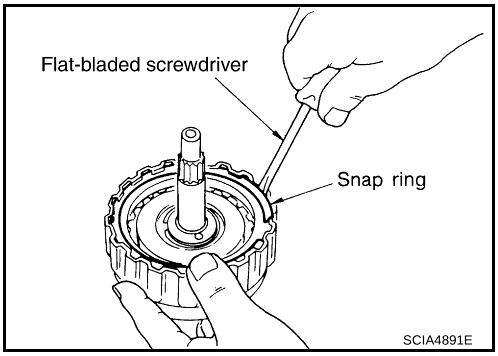

7. Measure clearance between retaining plate and snap ring. If not within allowable limit, select proper retaining plate. Refer to AT-378, "HIGH CLUTCH" .

Specified clearance

Standard:	**1.8 - 2.2 mm (0.071 - 0.087 in)**
Allowable limit:	**2.8 mm (0.110 in)**

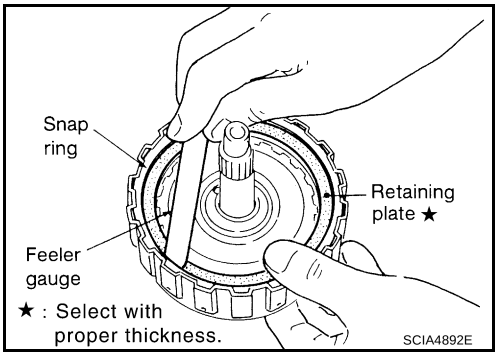

8. Check operation of high clutch. Refer to AT-316, "DISASSEMBLY" .

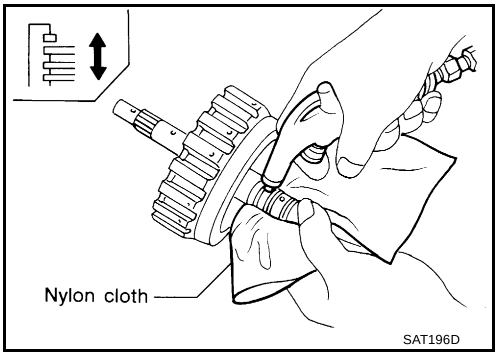

9. Install seal rings to input shaft assembly (high clutch drum).

CAUTION:
- **Do not reuse seal rings.**
- **Apply petroleum jelly to seal rings.**

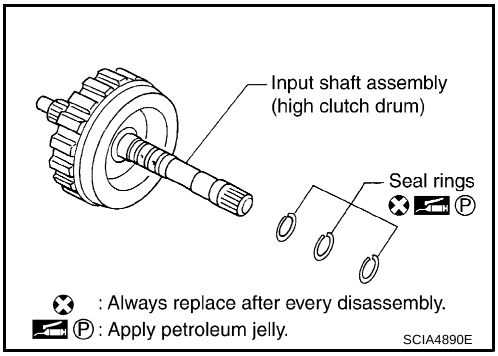

CAUTION:
Roll paper around seal rings to prevent seal rings from spreading.

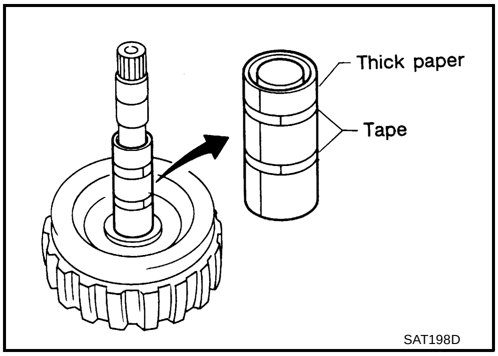

Forward and Overrun Clutches

ACS007VI

COMPONENTS

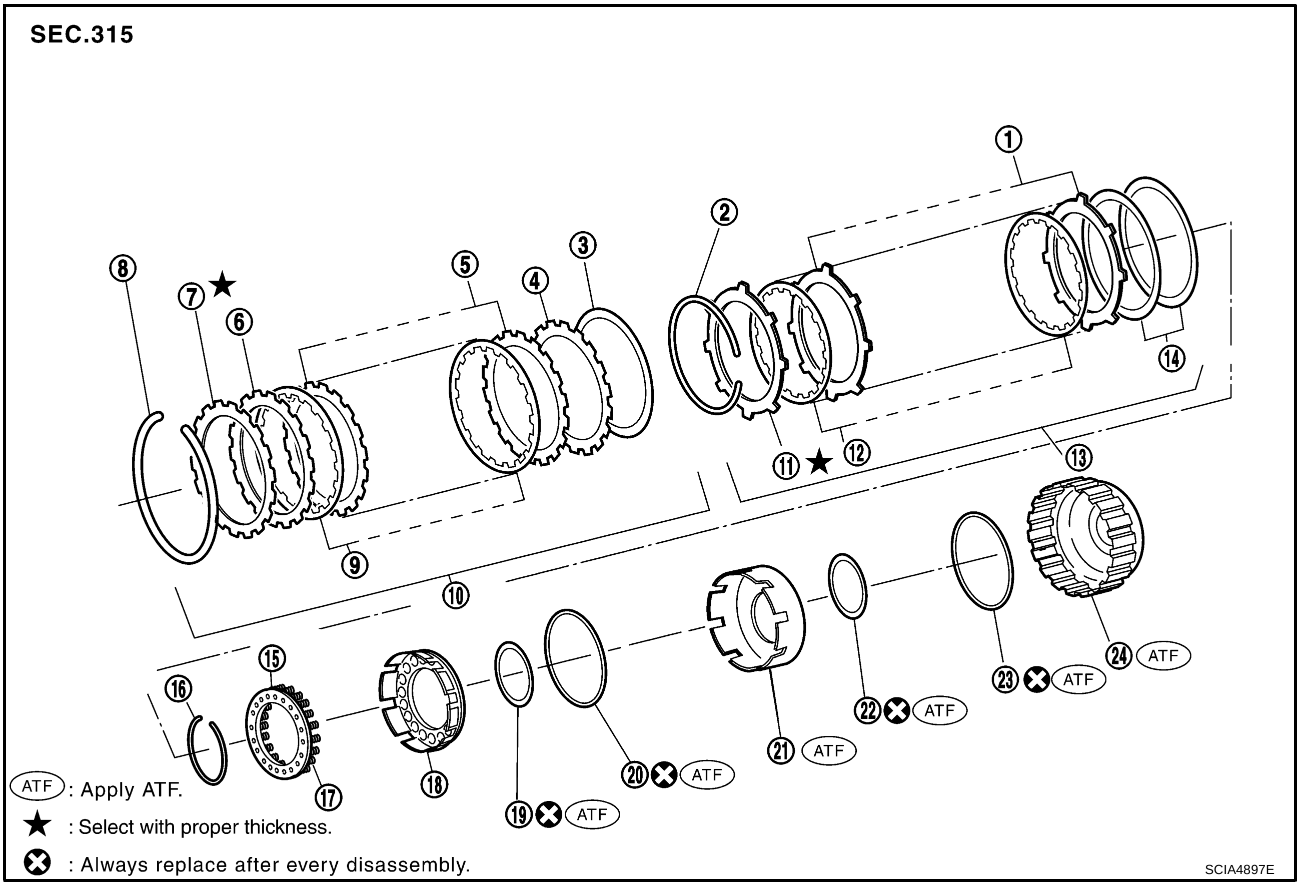

1.	Driven plate	2.	Snap ring	3.	Dish plate
4.	Retaining plate	5.	Driven plate	6.	Retaining plate
7.	Retaining plate	8.	Snap ring	9.	Drive plate
10.	Forward clutch	11.	Retaining plate	12.	Drive plate
13.	Overrun clutch	14.	Dish plate	15.	Spring retainer
16.	Snap ring	17.	Return spring	18.	Overrun clutch piston
19.	D-ring	20.	Seal ring	21.	Forward clutch piston
22.	D-ring	23.	Seal ring	24.	Forward clutch drum

DISASSEMBLY

1. Check operation of forward clutch and overrun clutch.
a. Install bearing retainer of output shaft on forward clutch drum.
b. Apply compressed air to oil hole of forward clutch drum.
c. Check to see that retaining plate moves to snap ring.
d. If retaining plate does not contact snap ring:
   - D-ring might be damaged.
   - Seal ring might be damaged.
   - Fluid might be leaking past piston check ball.

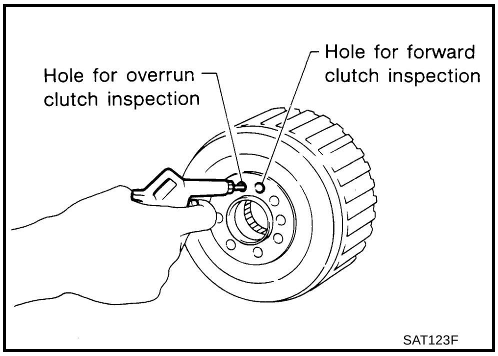

2. Remove snap ring for forward clutch with flat-bladed screwdriver.
3. Remove drive plates, driven plates, retaining plates and dish plate for forward clutch.

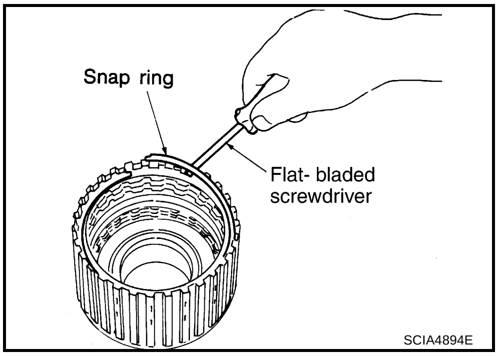

4. Remove snap ring for overrun clutch with flat-bladed screwdriver.
5. Remove drive plates, driven plates, retaining plate and dish plates for overrun clutch.

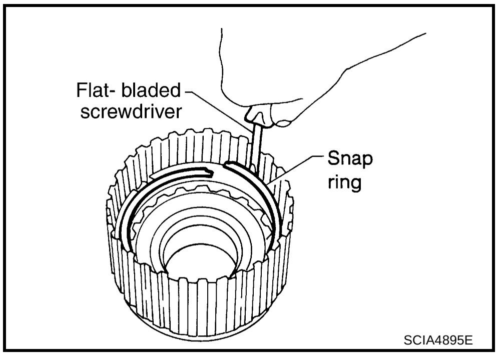

6. Set SST on spring retainer and remove snap ring from forward clutch drum while compressing return springs.

   CAUTION:
   - **Set SST directly over return springs.**
   - **Do not expand snap ring excessively.**
7. Remove spring retainer and return springs.

   CAUTION:
   Do not remove return springs from spring retainer.

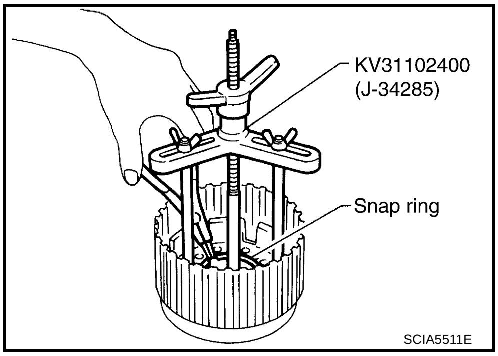

8. Remove forward clutch piston with overrun clutch piston from forward clutch drum by turning it.

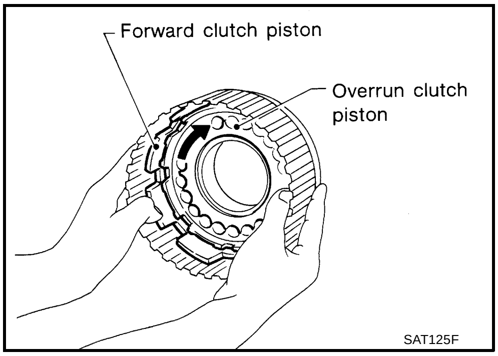

9. Remove overrun clutch piston from forward clutch piston by turning it.

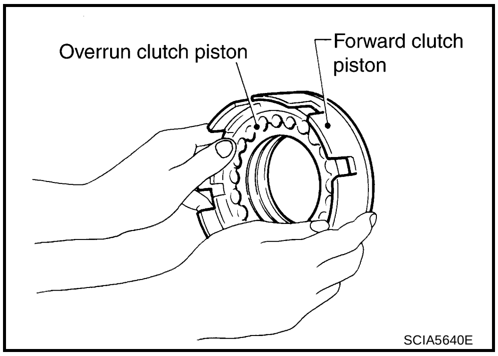

10. Remove D-rings and seal rings from forward clutch piston and overrun clutch piston.

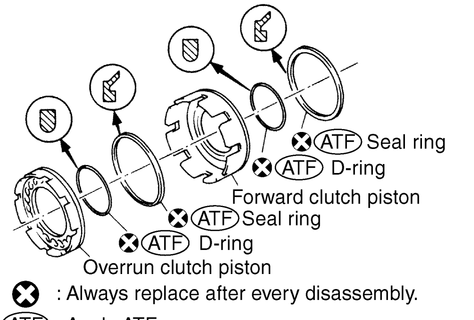

SCIA3046E

INSPECTION

Snap Rings, Spring Retainer and Return Springs

- Check for deformation, fatigue or damage.
  Replace if necessary.
- **When replacing spring retainer and return springs, replace them as a set.**

Forward Clutch and Overrun Clutch Drive Plates

- Check facing for burns, cracks or damage.
- Measure thickness of facing.

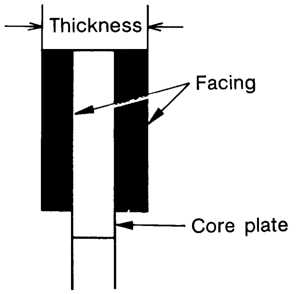

SAT162D

Thickness of drive plate

Forward clutch

Standard:	**1.6 mm (0.063 in)**
Wear limit:	**1.4 mm (0.055 in)**

Overrun clutch

Standard:	**1.6 mm (0.063 in)**
Wear limit:	**1.4 mm (0.055 in)**

- If not within wear limit, replace.

Forward Clutch and Overrun Clutch Dish Plates

- Check for deformation or damage.
- Measure thickness of dish plate.

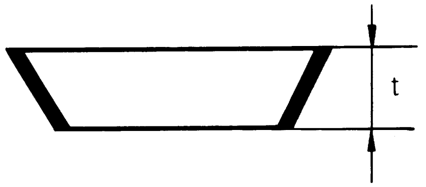

SAT163D

Thickness of dish plate

Forward clutch:	**2.7 mm (0.106 in)**
Overrun clutch:	**2.7 mm (0.106 in)**

- If deformed or fatigued, replace.

Forward Clutch Drum

- Make sure that check balls are not fixed.
- Apply compressed air to check ball oil hole from outside of forward clutch drum. Make sure air leaks past ball.
- Apply compressed air to oil hole from inside of forward clutch drum. Make sure there is no air leakage.

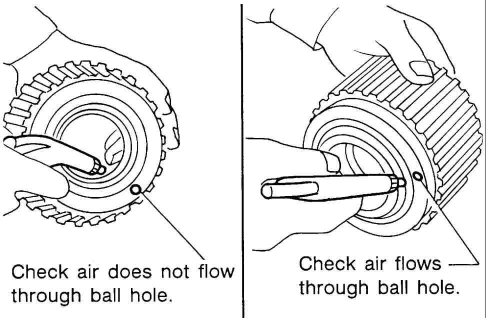

SAT213D

Overrun Clutch Piston

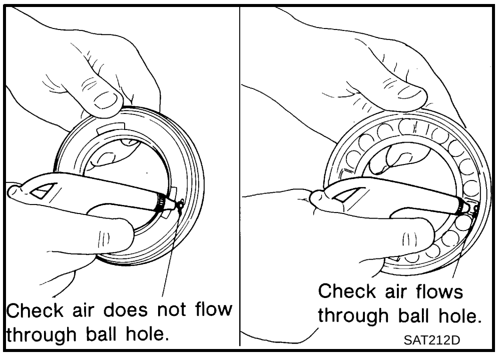

- Make sure that check balls are not fixed.
- Apply compressed air to check ball oil hole opposite return spring. Make sure there is no air leakage.
- Apply compressed air to oil hole on return spring side. Make sure that air leaks past ball.

ASSEMBLY

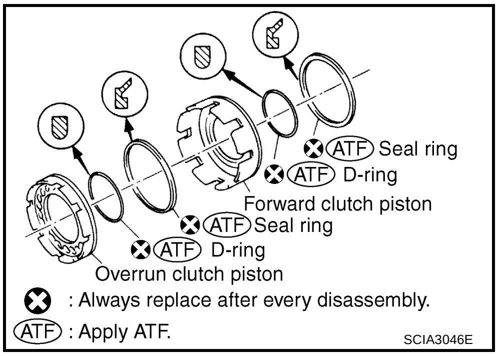

1. Install D-rings and seal rings on forward clutch piston and overrun clutch piston.

   CAUTION:
   - **Do not reuse D-rings and seal rings.**
   - **Apply ATF to D-rings and seal rings.**
   - **Be careful with direction of seal rings.**

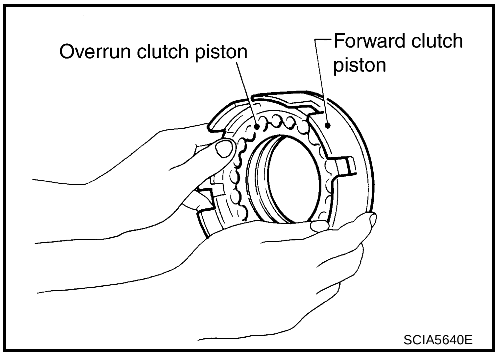

2. Install overrun clutch piston on forward clutch piston by turning it slowly.

   CAUTION:
   Apply ATF to inner surface of forward clutch piston.

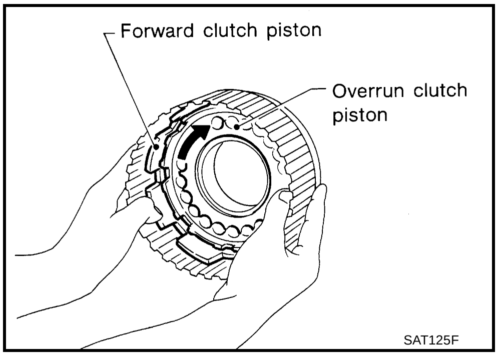

3. Install forward clutch piston with overrun clutch piston on forward clutch drum by turning it slowly.

   CAUTION:
   Apply ATF to inner surface of forward clutch drum.

4. Install spring retainer and return springs on overrun clutch piston.

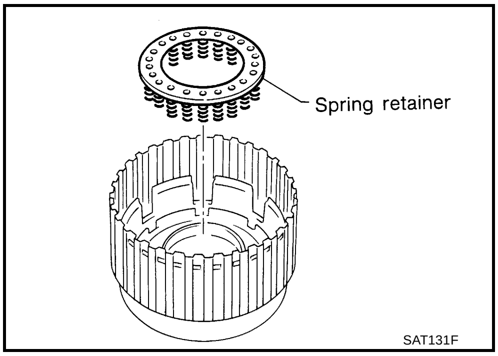

- Align the mark on spring retainer with check ball in overrun clutch piston.

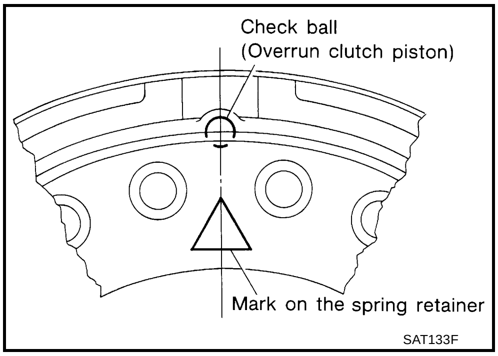

5. Set SST on spring retainer and install snap ring while compressing return springs.

CAUTION:
- **Set SST directly over return springs.**
- **Do not expand snap ring excessively.**

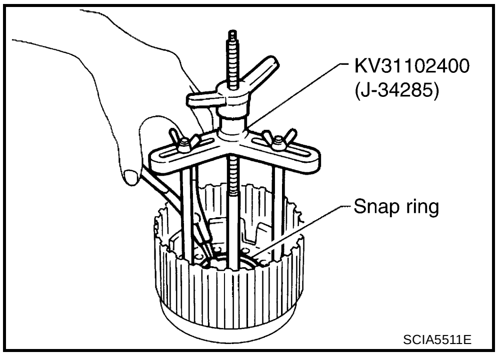

CAUTION:
Do not align snap ring gap with spring retainer stopper.

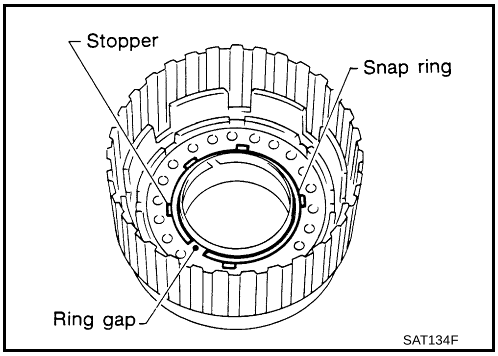

6. Install drive plates, driven plates, retaining plate and dish plates for overrun clutch. Refer to AT-379, "OVERRUN CLUTCH" .

CAUTION:
Be careful with the order and the direction of plates.

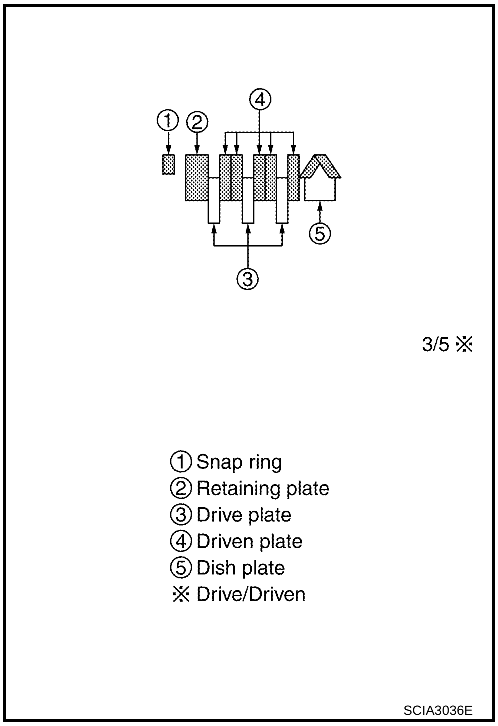

7. Install snap ring for overrun clutch with flat-bladed screwdriver.

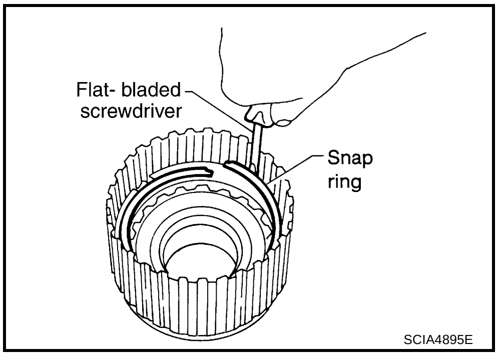

8. Measure clearance between retaining plate and snap ring. If not within allowable limit, select proper retaining plate. Refer to AT-379, "OVERRUN CLUTCH" .

Specified clearance

Standard:	**0.7 - 1.1 mm (0.028 - 0.043 in)**
Allowable limit:	**1.7 mm (0.067 in)**

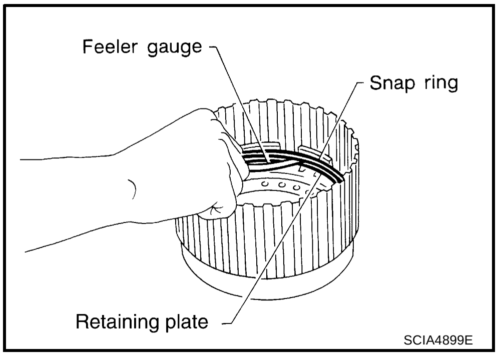

9. Install drive plates, driven plates, retaining plates and dish plate for forward clutch. Refer to AT-379, "FORWARD CLUTCH" .

CAUTION:

Be careful with the order and the direction of plates.

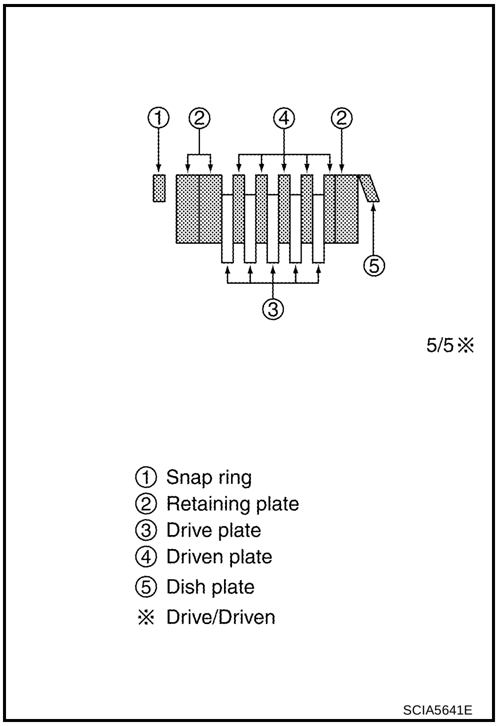

10. Install snap ring for forward clutch with flat-bladed screwdriver.

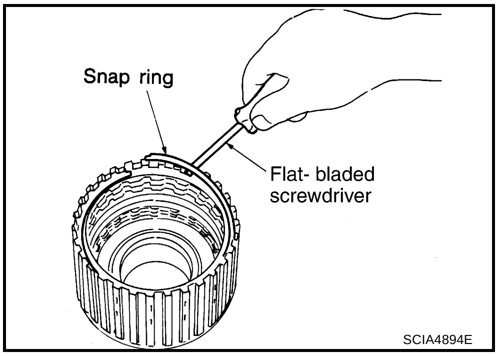

11. Measure clearance between retaining plate and snap ring. If not within allowable limit, select proper retaining plate. Refer to AT-379, "FORWARD CLUTCH" .

Specified clearance

Standard:	**0.45 - 0.85 mm (0.0177 - 0.0335 in)**
Allowable limit:	**1.85 mm (0.0728 in)**

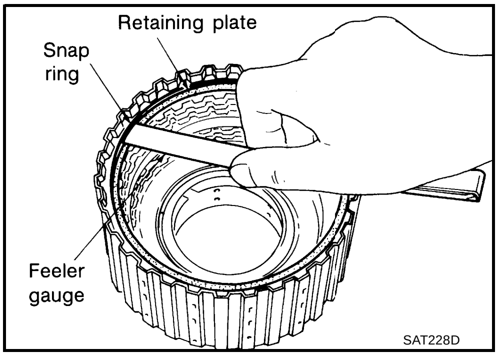

12. Check operation of forward clutch and overrun clutch. Refer to AT-322, "DISASSEMBLY" .

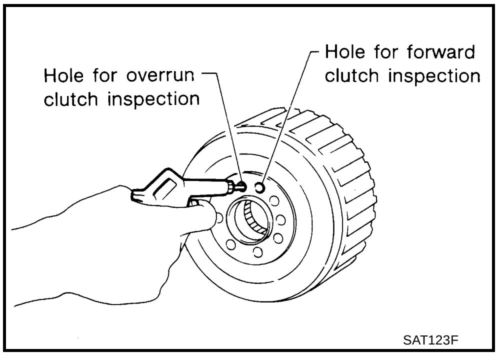

Low & Reverse Brake

ACS007VJ

COMPONENTS

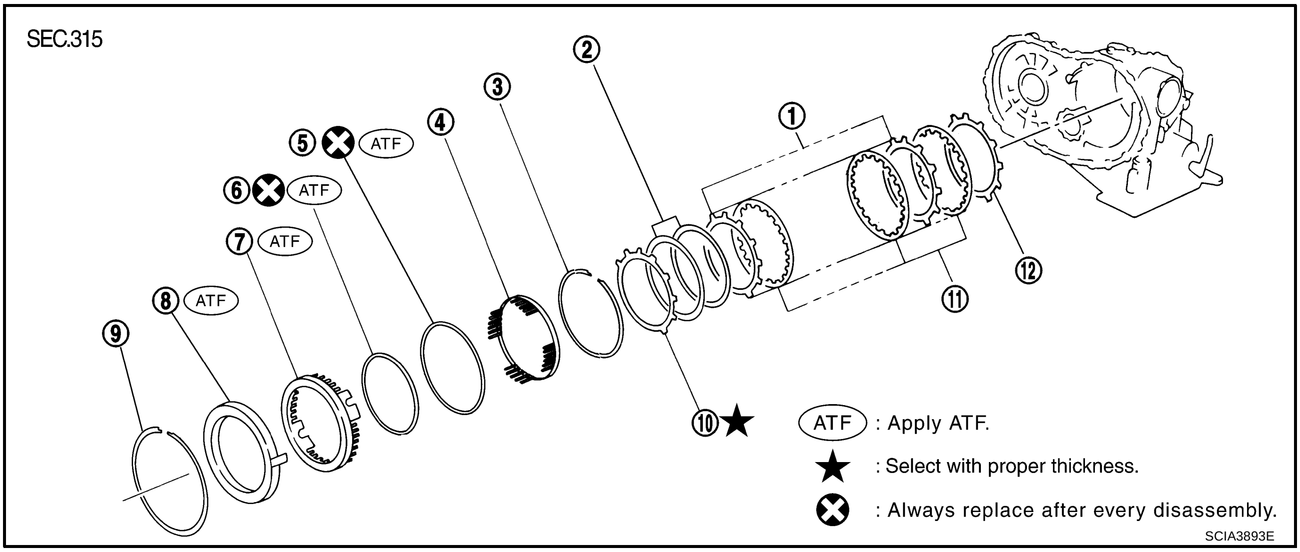

SCIA3893E

1.	Driven plate	2.	Dish plate	3.	Snap ring
4.	Spring retainer	5.	D-ring	6.	D-ring
7.	Low & reverse brake piston	8.	Retainer	9.	Snap ring
10.	Retaining plate	11.	Drive plate	12.	Retaining plate

DISASSEMBLY

1. Check operation of low & reverse brake.
a. Apply compressed air to oil hole of transaxle case.
b. Check to see that retaining plate moves to snap ring.
c. If retaining plate does not contact snap ring:
   - D-ring might be damaged.
   - Fluid might be leaking past piston check ball.

2. Remove snap ring with flat-bladed screwdriver.
3. Remove low & reverse brake piston (with retainer) and spring retainer from transaxle case.

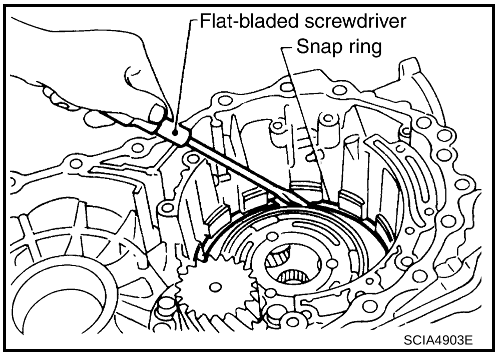

SCIA4903E

4. Remove snap ring with flat-bladed screwdriver.
5. Remove driven plates, drive plates, retaining plates and dish plates from transaxle case.

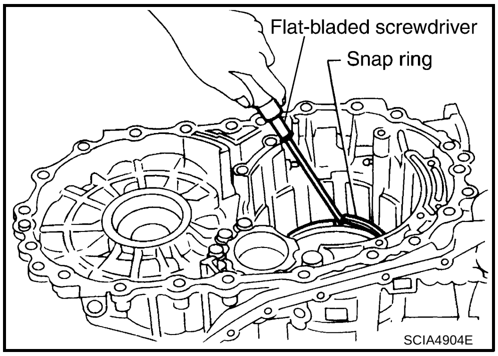

SCIA4904E

6. In order to remove low & reverse brake piston, apply compressed air to oil hole of retainer while holding low & reverse brake piston.

   CAUTION:

   Apply air gradually and allow low & reverse brake piston to come out evenly.

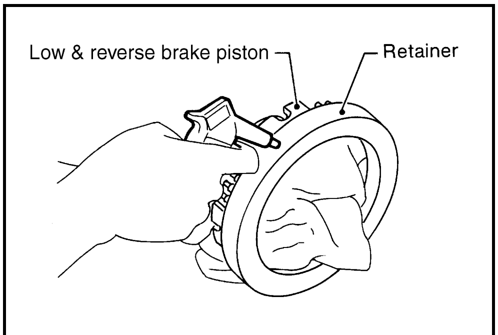

SCIA3651E

7. Remove D-rings from low & reverse brake piston.

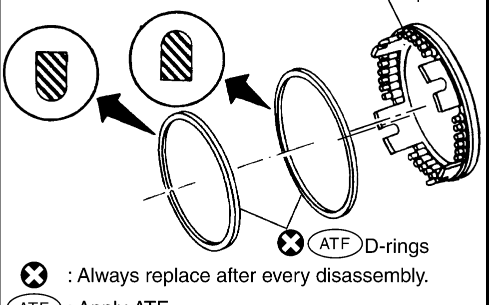

SCIA4381E

INSPECTION

Low & Reverse Brake Snap Rings, Spring Retainer and Return Springs

- Check for deformation, fatigue or damage.
  If necessary, replace.
- **When replacing spring retainer and return springs, replace them as a set.**

Low & Reverse Brake Drive Plates

- Check facing for burns, cracks or damage.
- Measure thickness of facing.

Thickness of drive plate

Standard:	**1.8 mm (0.071 in)**
Wear limit:	**1.6 mm (0.063 in)**

- If not within wear limit, replace.

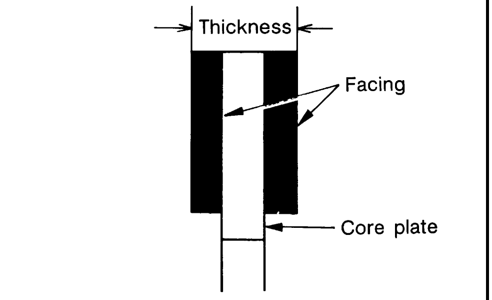

SAT162D

ASSEMBLY

1. Install D-rings on low & reverse brake piston.

   CAUTION:

   - **Do not reuse D-rings.**
   - **Apply ATF to D-rings.**

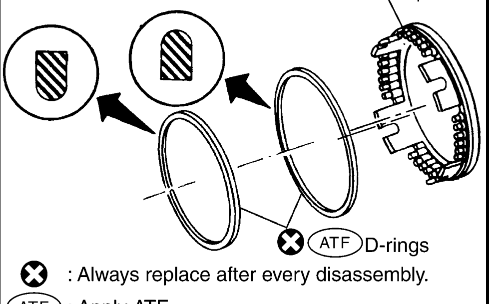

SCIA4381E

2. Set and align low & reverse brake piston with retainer.

CAUTION:

- **This operation is required in order to engage the protrusions of piston to return springs correctly. Further procedures are given in AT-353, "ASSEMBLY" .**
- **Apply ATF to surface of low & reverse brake piston and retainer.**

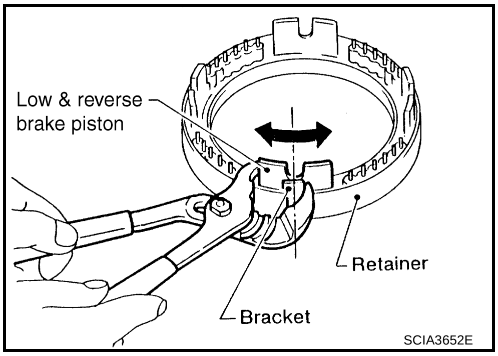

3. Install driven plates, drive plates, retaining plates and dish plates on transaxle case. Refer to AT-380, "LOW & REVERSE BRAKE" .

CAUTION:

Be careful with the order of plates and the direction of dish plates.

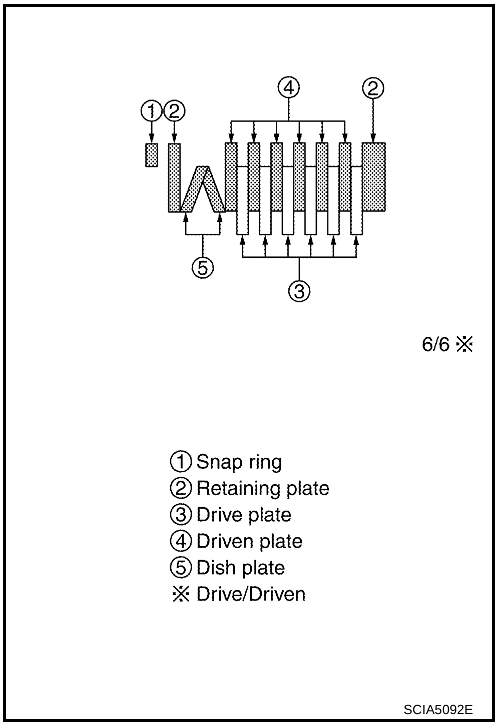

4. Install snap ring with flat-bladed screwdriver.

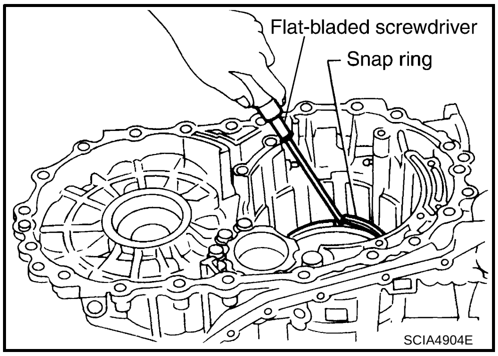

5. Measure clearance between retaining plate and transaxle case. If not within allowable limit, select proper retaining plate. (front side) Refer to AT-380, "LOW & REVERSE BRAKE" .

Specified clearance

Standard:	**1.7 - 2.1 mm (0.067 - 0.083 in)**
Allowable limit:	**3.3 mm (0.130 in)**

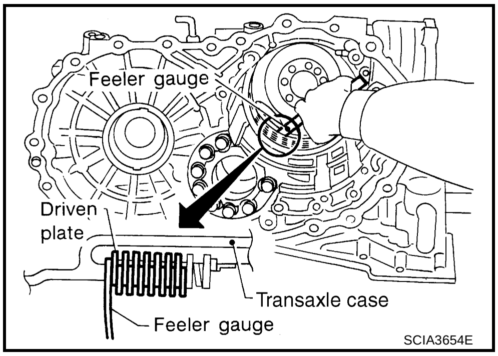

6. Install low & reverse brake piston (with retainer) and spring retainer on transaxle case.
7. Install snap ring with flat-bladed screwdriver.
8. Check operation of low & reverse brake. Refer to AT-329, "DISASSEMBLY" .

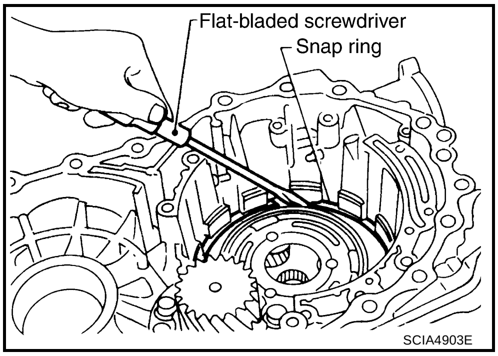

Rear Internal Gear, Forward Clutch Hub and Overrun Clutch Hub

ACS007VK

COMPONENTS

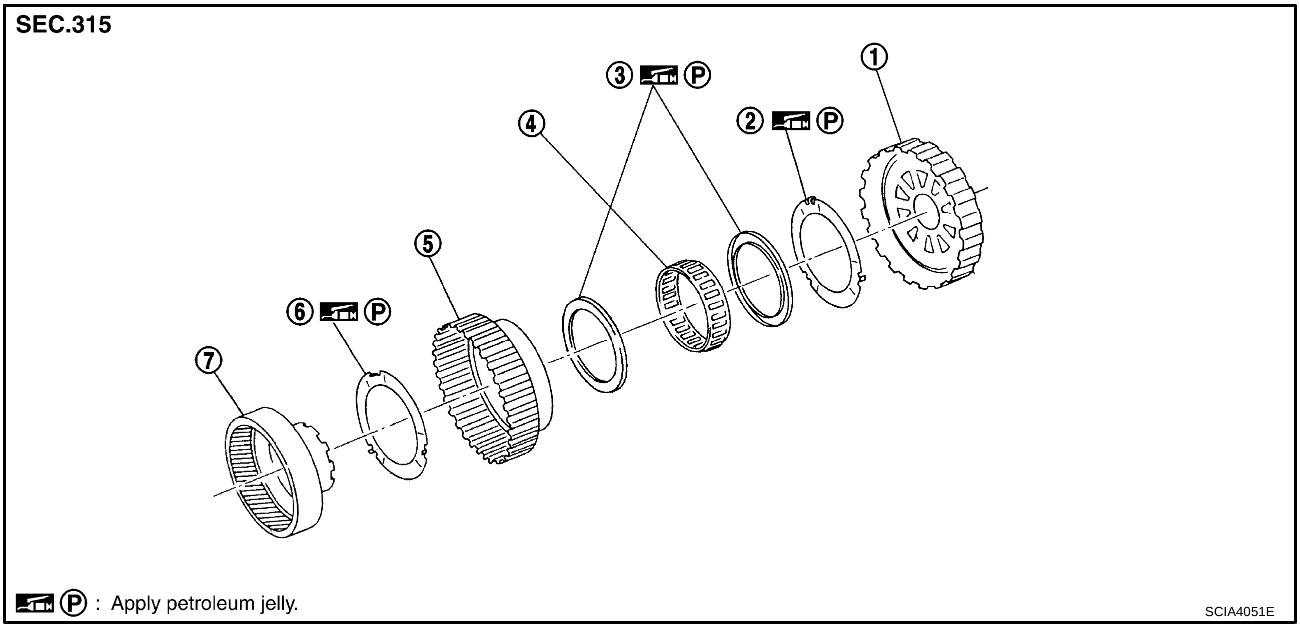

1.	Overrun clutch hub	2.	Thrust washer	3.	Bearing race
4.	Forward one-way clutch	5.	Forward clutch hub	6.	Thrust washer
7.	Rear internal gear				

DISASSEMBLY

1. Remove overrun clutch hub and thrust washer from forward clutch hub.

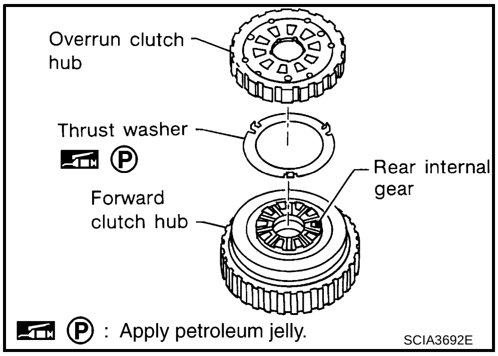

2. Remove forward clutch hub from rear internal gear.

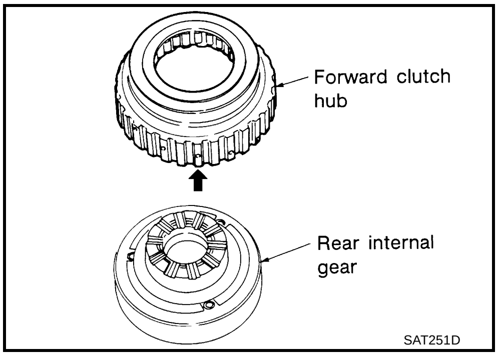

3. Remove bearing race from rear internal gear.

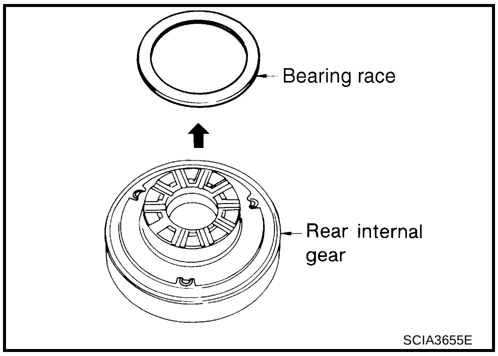

4. Remove thrust washer from rear internal gear.

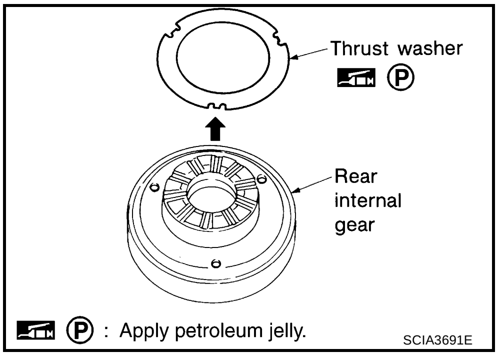

5. Remove bearing race from forward one-way clutch.

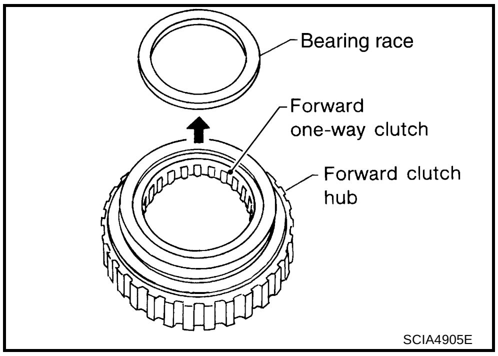

6. Remove forward one-way clutch from forward clutch hub.

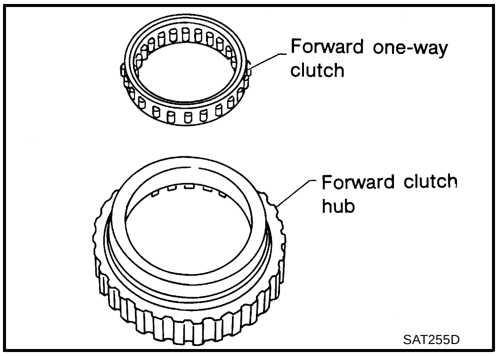

INSPECTION

Rear Internal Gear, Forward Clutch Hub and Overrun Clutch Hub

- Check rubbing surfaces for wear or damage.

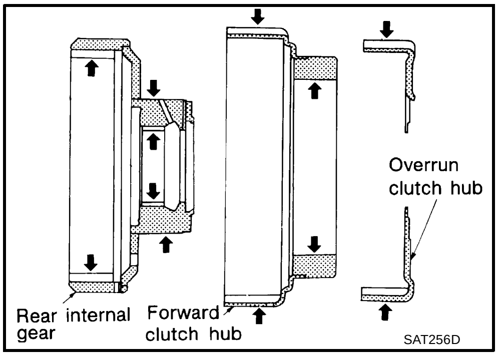

Bearing Races and Forward One-way Clutch

- Check bearing races for deformation and damage.
- Check forward one-way clutch for wear and damage.

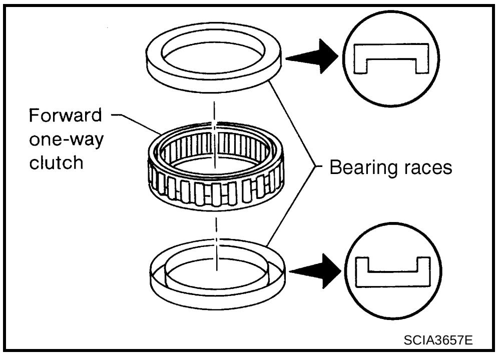

ASSEMBLY

1. Install forward one-way clutch on forward clutch hub.
   CAUTION:
   Be careful with the direction of forward one-way clutch.

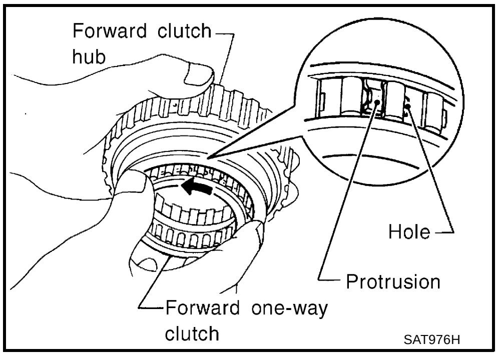

2. Install bearing race on forward one-way clutch.
   CAUTION:
   Apply petroleum jelly to bearing race.

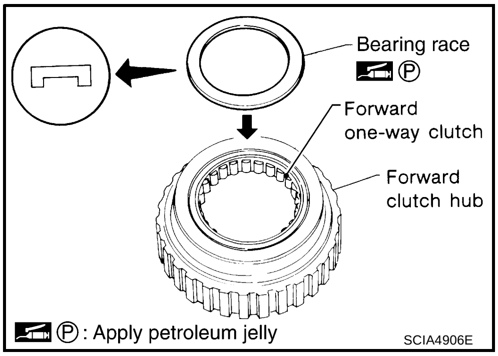

3. Install thrust washer on rear internal gear.

   CAUTION:
   - **Apply petroleum jelly to thrust washer.**
   - **Align pawls of thrust washer with holes of rear internal gear.**

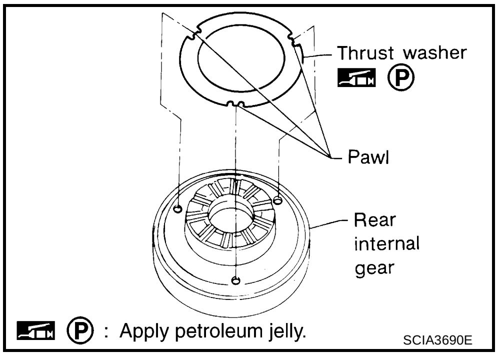

4. Install bearing race on rear internal gear.

   CAUTION:
   Apply petroleum jelly to bearing race.

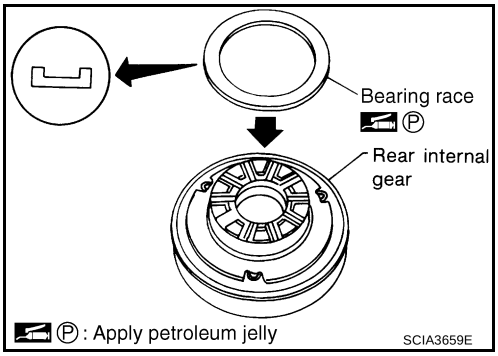

5. Install forward clutch hub on rear internal gear.

   CAUTION:
   - **Check operation of forward one-way clutch. Hold rear internal gear and turn forward clutch hub. Check forward clutch hub for correct locking and unlocking directions.**
   - **If not as shown in the figure, check installation direction of forward one-way clutch.**

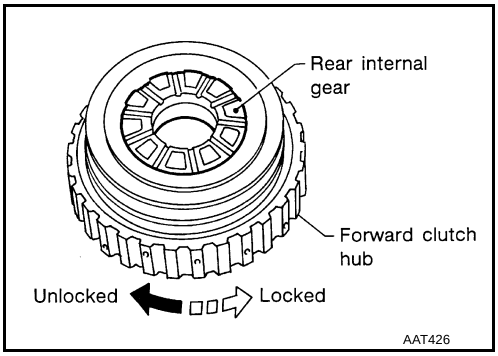

6. Install thrust washer and overrun clutch hub on forward clutch hub.

   CAUTION:
   - **Apply petroleum jelly to thrust washer.**
   - **Align pawls of thrust washer with holes of overrun clutch hub.**
   - **Align projections of rear internal gear with holes of overrun clutch hub.**

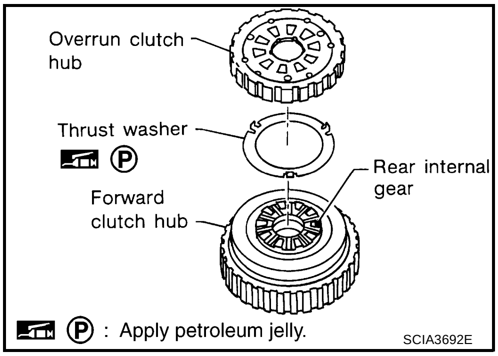

Output Shaft, Idler Gear, Reduction Pinion Gear and Bearing Retainer

ACS007VL

COMPONENTS

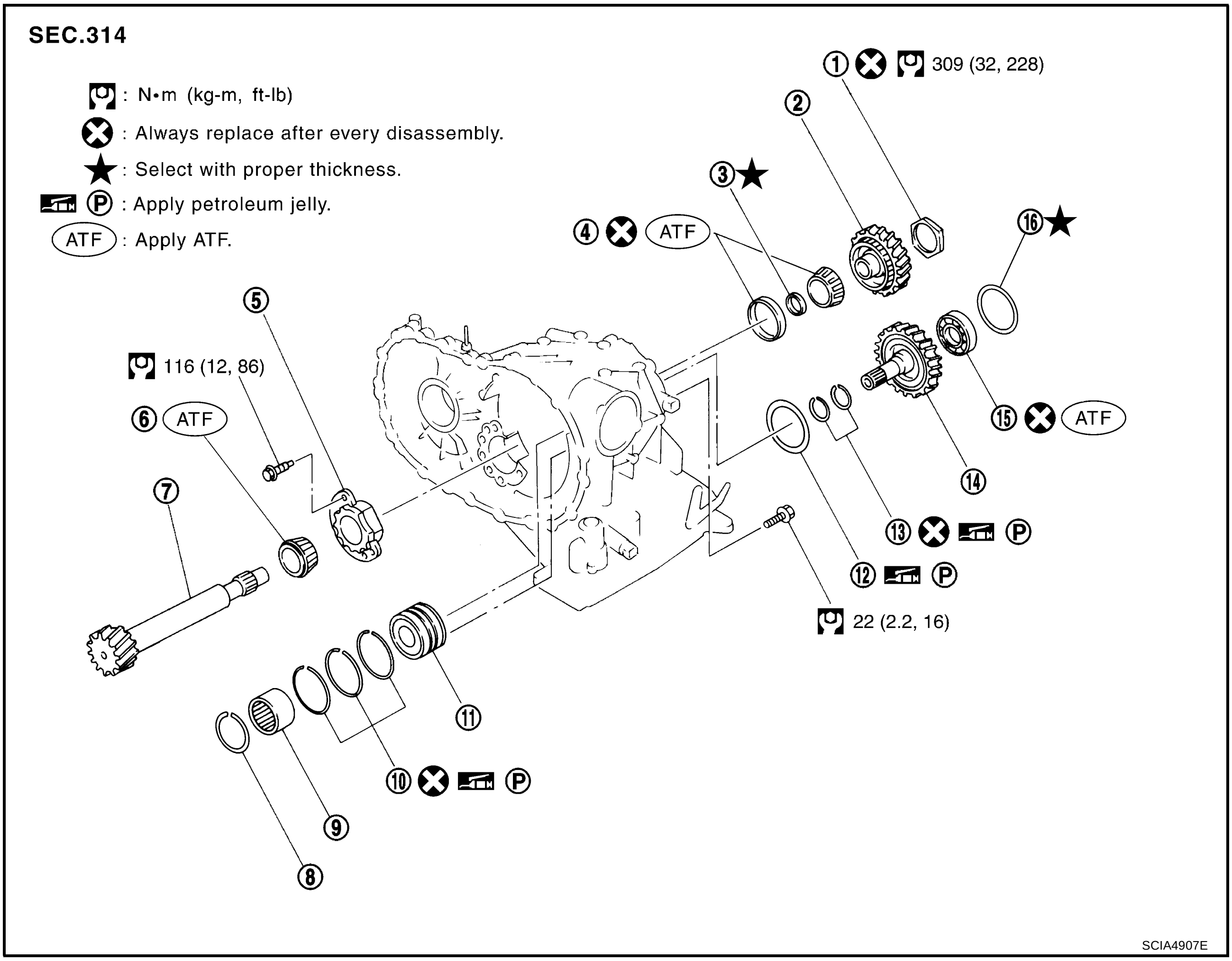

1.	Idler gear lock nut	2.	Idler gear	3.	Reduction pinion gear adjusting shim
4.	Idler gear bearing	5.	Reduction pinion gear bearing outer race	6.	Reduction pinion gear bearing inner race
7.	Reduction pinion gear	8.	Snap ring	9.	Radial needle bearing
10.	Seal ring	11.	Bearing retainer	12.	Needle bearing
13.	Seal ring	14.	Output shaft	15.	Output shaft bearing
16.	Output shaft adjusting shim				

DISASSEMBLY

1. Remove seal rings from output shaft and bearing retainer.

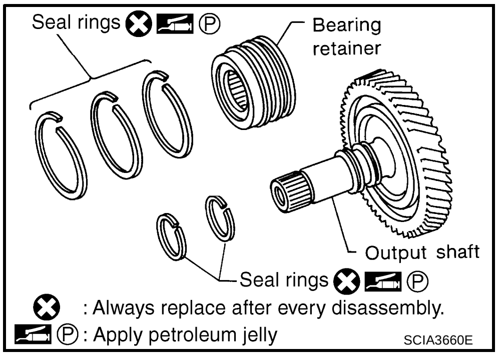

2. Remove output shaft bearing with flat-bladed screwdrivers.

   CAUTION:
   - **Always replace bearing with a new one when removed.**
   - **Do not damage output shaft.**

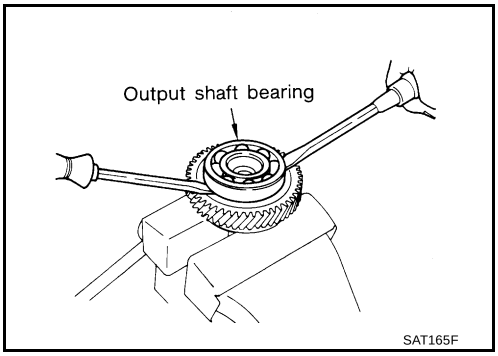

3. Remove snap ring from bearing retainer.

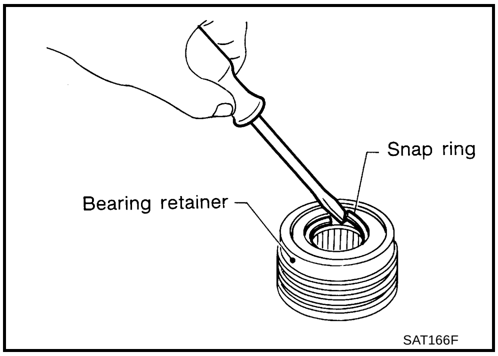

4. Remove radial needle bearing from bearing retainer.

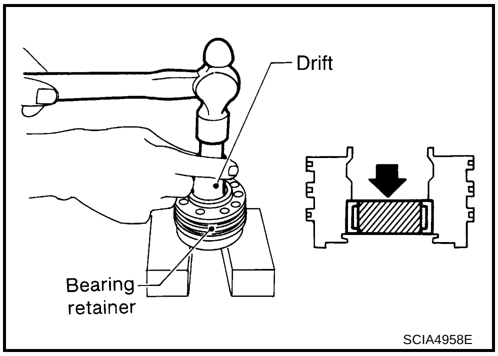

5. Remove idler gear bearing inner race from idler gear.

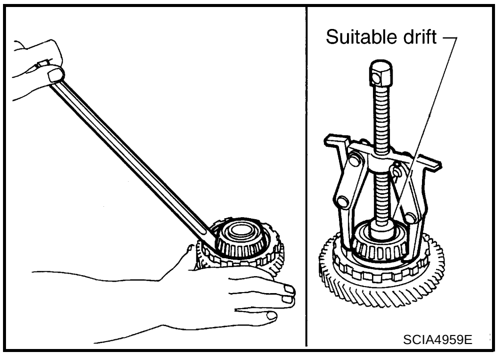

6. Remove idler gear bearing outer race from transaxle case.

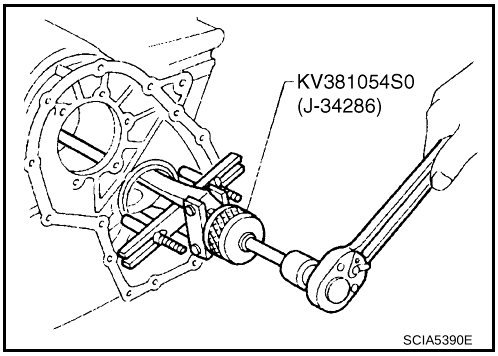

7. Press out reduction pinion gear bearing inner race from reduction pinion gear.

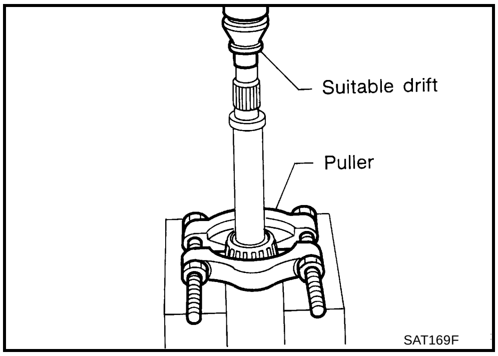

SAT169F

8. Remove reduction pinion gear bearing outer race from transaxle case.

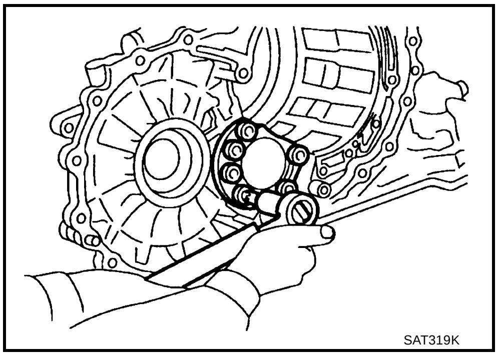
SAT319K

INSPECTION

Output Shaft, Idler Gear and Reduction Pinion Gear

- Check shafts for cracks, wear or bending.
- Check gears for wear, chips and cracks.

Bearings

- Make sure bearings roll freely and are free from noise, cracks, pitting or wear.
- **When replacing taper roller bearing, replace outer and inner race as a set.**

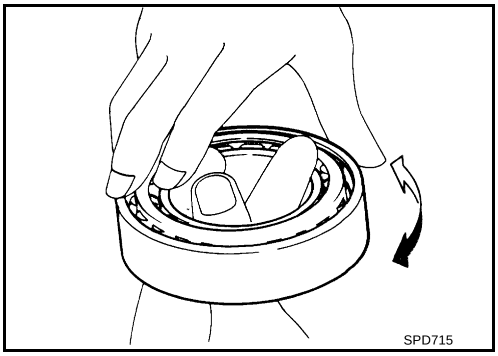
SPD715

Seal Ring Clearance

- Install new seal rings to output shaft.
- Measure clearance between seal ring and ring groove of output shaft.

Standard clearance:	**0.10 - 0.25 mm (0.0039 - 0.0098 in)**
Allowable limit:	**0.25 mm (0.0098 in)**

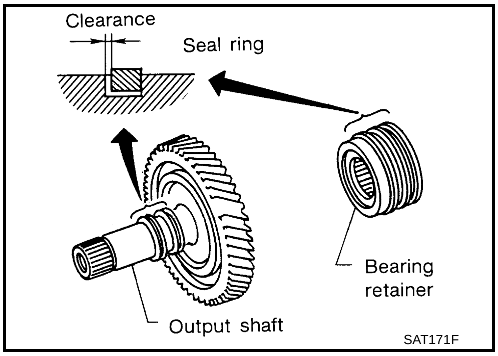

SAT171F

- If not within allowable limit, replace output shaft.
- Install new seal rings to bearing retainer.
- Measure clearance between seal ring and ring groove of bearing retainer.

Standard clearance:	**0.10 - 0.30 mm (0.0039 - 0.0118 in)**
Allowable limit:	**0.30 mm (0.0118 in)**

- If not within allowable limit, replace bearing retainer.

ASSEMBLY

1. Press reduction pinion gear bearing inner race on reduction pinion gear.

   CAUTION:

   Apply ATF to reduction pinion gear bearing inner race.

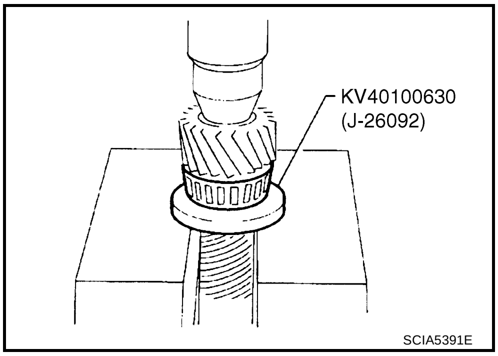

2. Install reduction pinion gear bearing outer race on transaxle case. Refer to AT-337, "COMPONENTS" .
3. Checking reduction pinion gear bearing preload. Refer to AT-355, "REDUCTION PINION GEAR BEARING PRELOAD" .

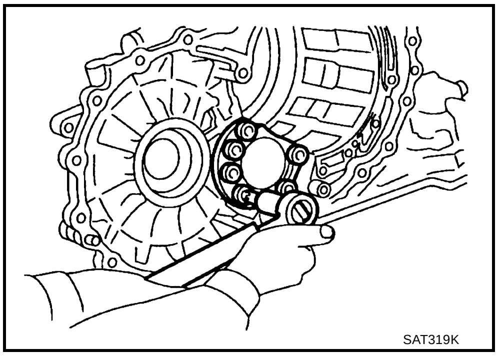

4. Press idler gear bearing inner race on idler gear.

   CAUTION:

   - **Do not reuse idler gear bearing.**
   - **Apply ATF to idler gear bearing.**

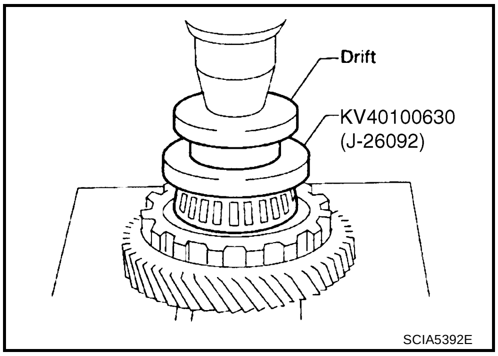

5. Install idler gear bearing outer race on transaxle case.

   CAUTION:

   - **Do not reuse idler gear bearing.**
   - **Apply ATF to idler gear bearing.**

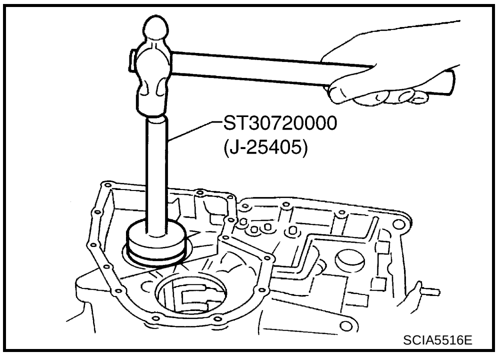

6. Press output shaft bearing on output shaft.

CAUTION:

- **Do not reuse output shaft bearing.**
- **Apply ATF to output shaft bearing.**

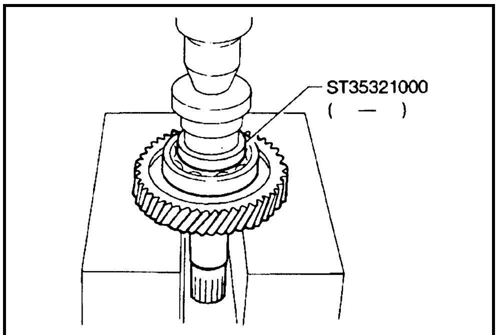

SAT863D

7. Press radial needle bearing on bearing retainer.

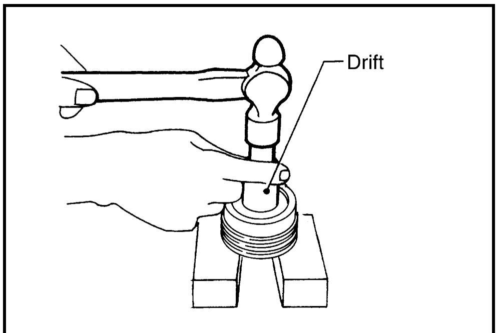

SCIA4961E

8. Install snap ring to bearing retainer.

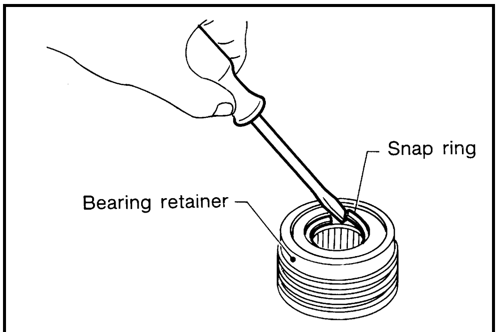

SAT166F

9. After packing ring grooves with petroleum jelly, carefully install new seal rings on output shaft and bearing retainer.

CAUTION:

- **Do not reuse seal rings.**
- **Apply petroleum jelly to seal rings.**

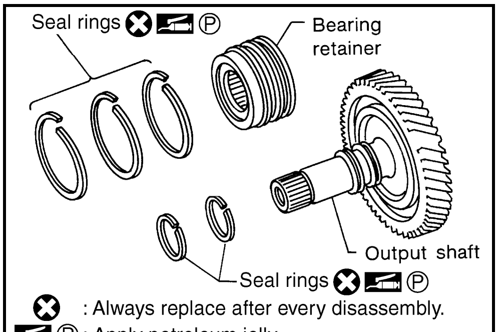

SCIA3660E

CAUTION:

Roll paper around seal rings to prevent seal rings from spreading.

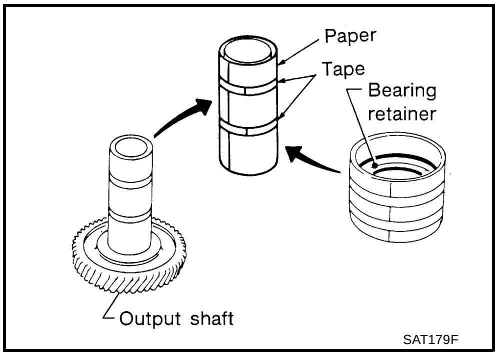

Band Servo Piston Assembly

ACS007VM

COMPONENTS

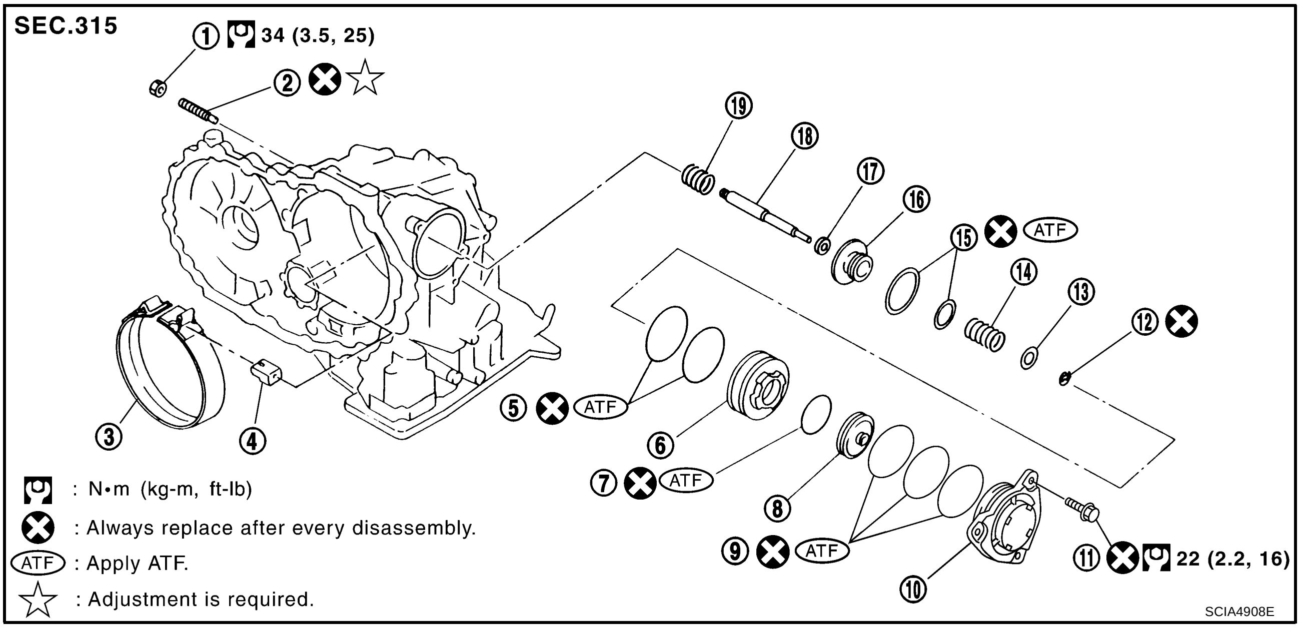

1. Lock nut	2. Anchor end pin	3. Brake band
4. Strut	5. O-ring	6. Servo piston retainer
7. D-ring	8. OD servo piston	9. O-ring
10. OD servo piston retainer	11. OD servo piston retainer fitting bolt	12. E-ring
13. Spring retainer	14. OD servo return spring	15. D-ring
16. Band servo piston	17. Band servo thrust washer	18. Band servo piston stem
19. 2nd servo return spring		

DISASSEMBLY

1. Remove OD servo piston retainer fitting bolts.

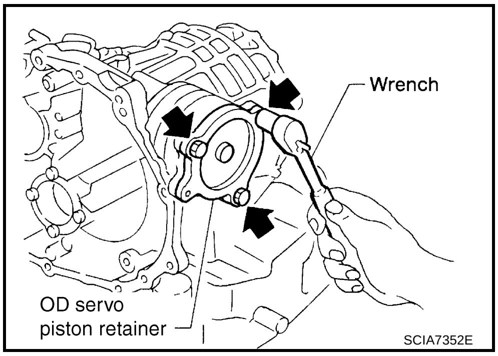

2. Apply compressed air to oil hole in transaxle case to remove OD servo piston retainer and band servo piston assembly.

   CAUTION:

   Hold band servo piston assembly with a rag or nylon cloth.

3. Remove 2nd servo return spring from transaxle case.

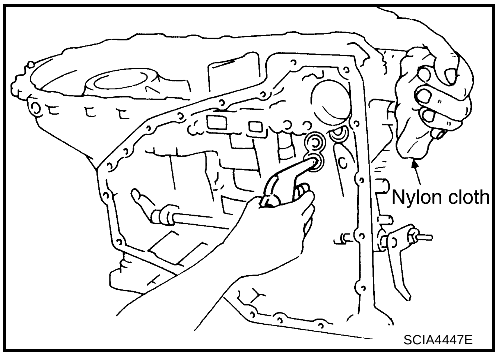

4. Apply compressed air to oil hole in OD servo piston retainer to remove OD servo piston from OD servo piston retainer.

CAUTION:

Hold OD servo piston while applying compressed air.

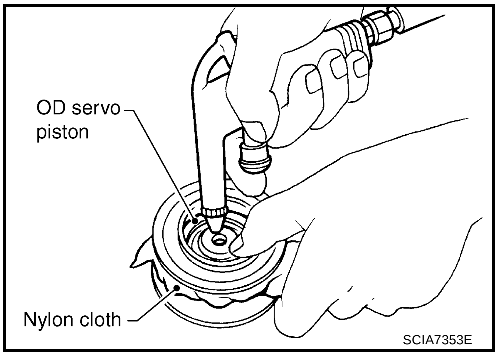

5. Remove D-ring from OD servo piston.

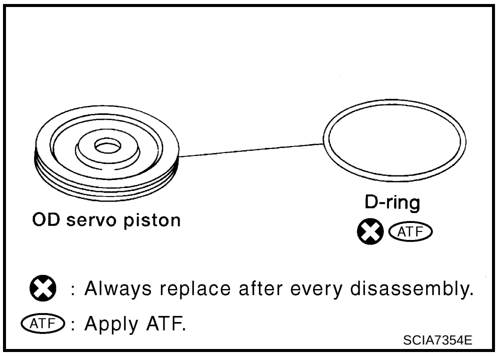

6. Remove O-rings from OD servo piston retainer.

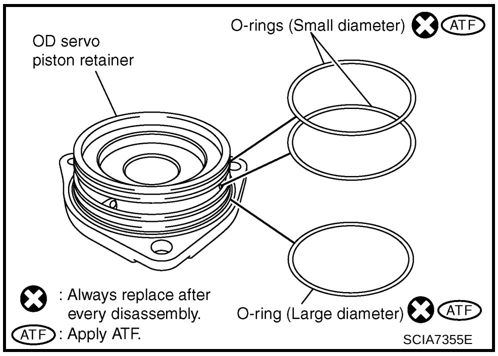

7. Remove band servo piston assembly from servo piston retainer by pushing it forward.

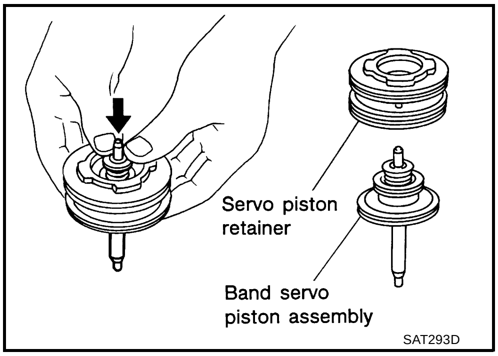

8. Place band servo piston stem end on a wooden block. While pushing spring retainer down, remove E-ring.

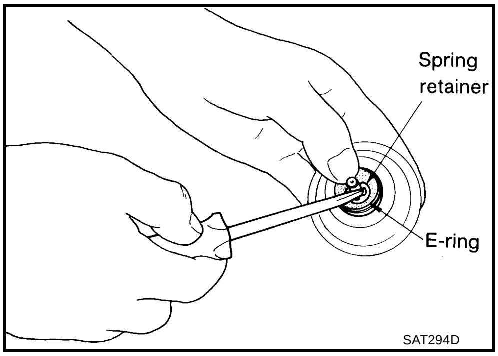

9. Remove spring retainer, OD servo return spring, band servo thrust washer and band servo piston stem from band servo piston.

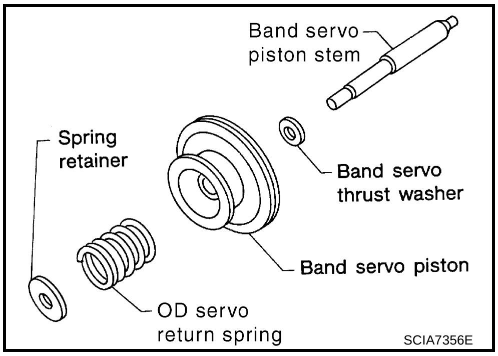

10. Remove O-rings from servo piston retainer.

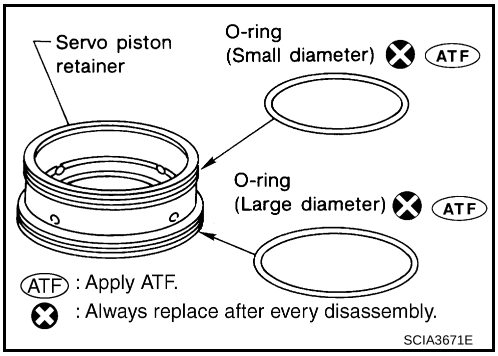

11. Remove D-rings from band servo piston.

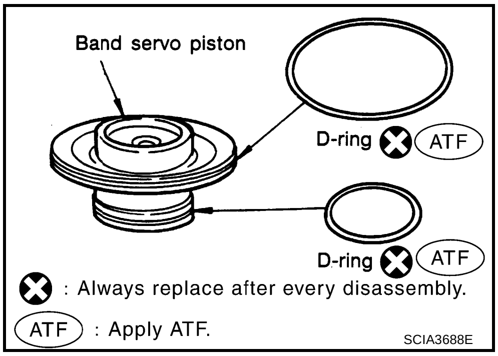

INSPECTION

Pistons, Retainers and Piston Stem

- Check frictional surfaces for abnormal wear or damage.

Return Springs

- Check for deformation or damage.
- Measure free length and outer diameter. Refer to AT-382, "Band Servo" .

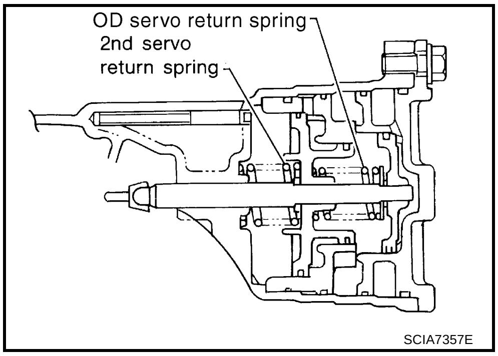

ASSEMBLY

1. Install D-rings to band servo piston.

   CAUTION:
   - **Do not reuse D-rings.**
   - **Apply ATF to D-rings.**
   - **Pay attention to position of each D-rings.**

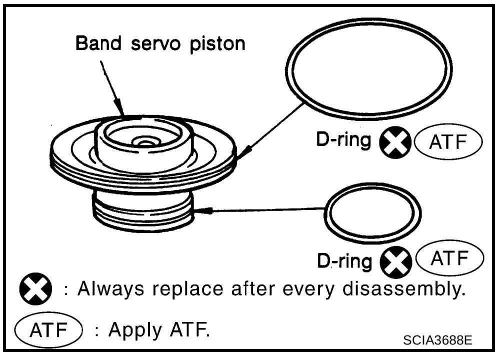

2. Install band servo piston stem, band servo thrust washer, OD servo return spring and spring retainer to band servo piston.

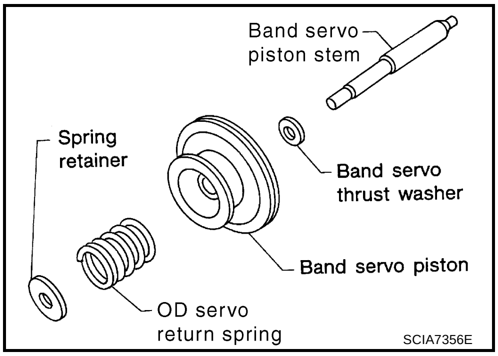

3. Place band servo piston stem end on a wooden block. While pushing spring retainer down, install E-ring.

   CAUTION:

   Do not reuse E-ring.

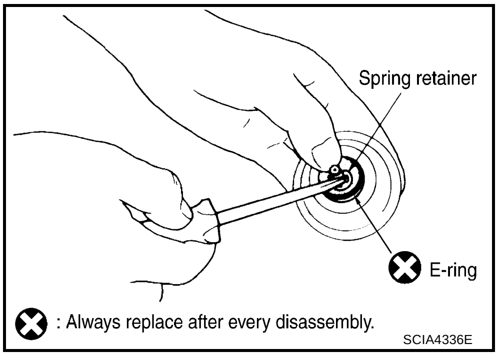

4. Install O-rings to servo piston retainer.

   CAUTION:
   - **Do not reuse O-rings.**
   - **Apply ATF to O-rings.**
   - **Pay attention to position of each O-rings.**

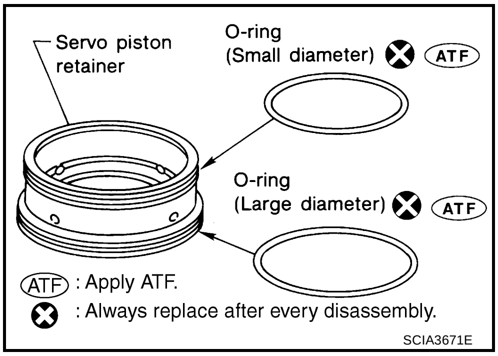

5. Install band servo piston assembly to servo piston retainer by pushing it inward.

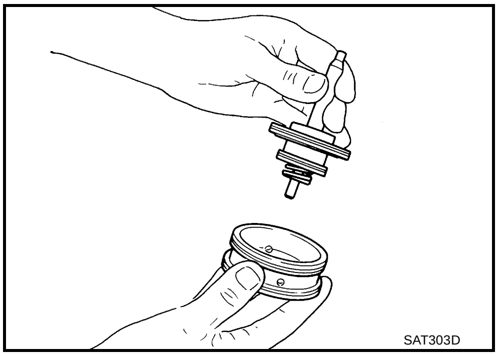

6. Install D-ring to OD servo piston.

CAUTION:
- **Do not reuse D-ring.**
- **Apply ATF to D-ring.**

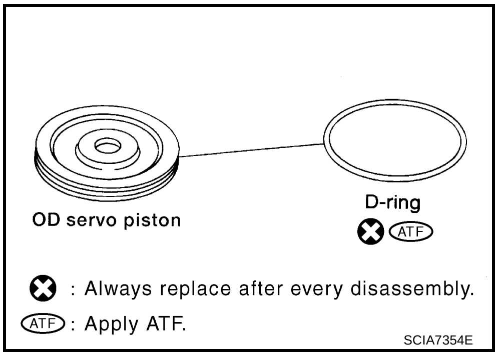

7. Install OD servo piston to OD servo piston retainer fitting the installation direction on it.

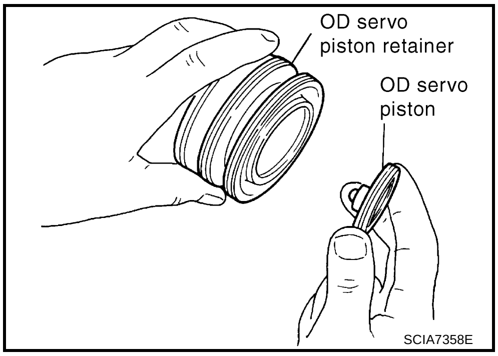

8. Install band servo piston assembly and 2nd servo return spring to transaxle case.

CAUTION:
Apply ATF to O-rings of band servo piston assembly and transaxle case.

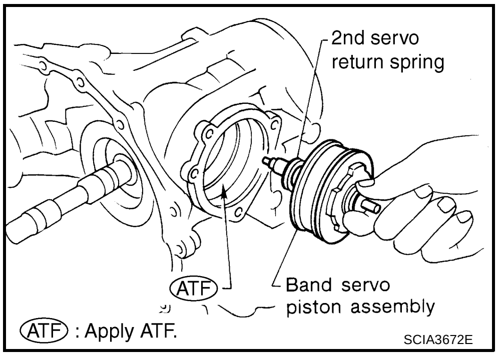

9. Install O-rings to OD servo piston retainer.

CAUTION:
- **Do not reuse O-rings.**
- **Apply ATF to O-rings.**
- **Pay attention to position of each O-rings.**

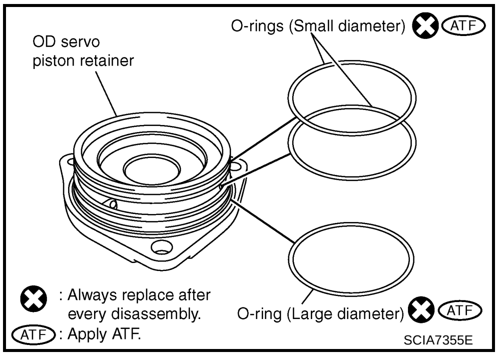

10. Install OD servo piston retainer to transaxle case. Refer to AT-343, "COMPONENTS" .

    CAUTION:

    - **Do not reuse OD servo piston retainer fitting bolts.**
    - **Apply ATF to O-rings of OD servo piston retainer and transaxle case.**

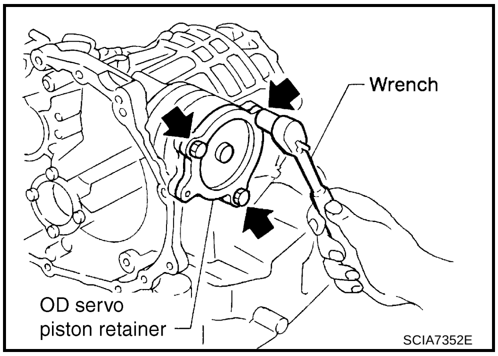

Final Drive

ACS007VN

COMPONENTS

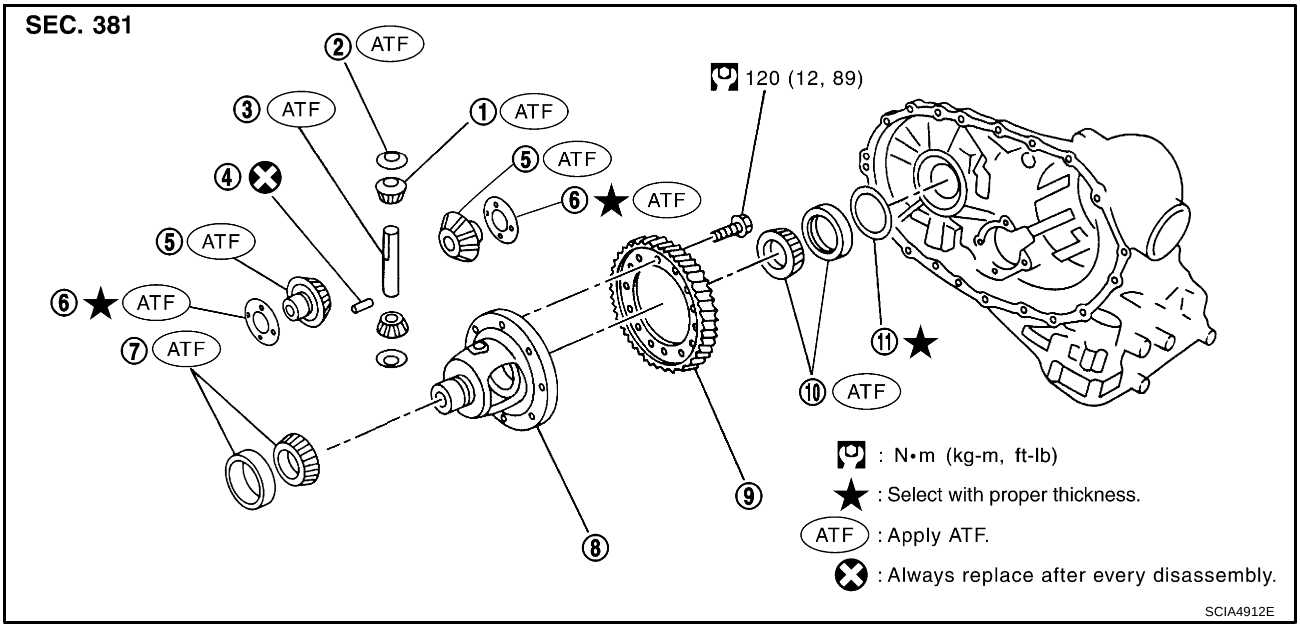

1. Pinion mate gear	2. Pinion mate gear thrust washer	3. Pinion mate shaft
4. Lock pin	5. Side gear	6. Side gear thrust washer
7. Differential side bearing	8. Differential case	9. Final gear
10. Differential side bearing	11. Differential side bearing adjusting shim	

DISASSEMBLY

1. Remove final gear.

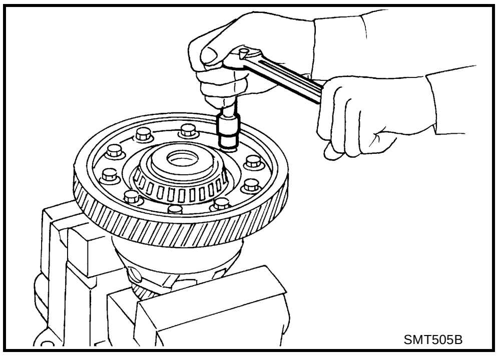

2. Press out differential side bearings.

   CAUTION:
   Be careful not to mix up the right and left bearings.

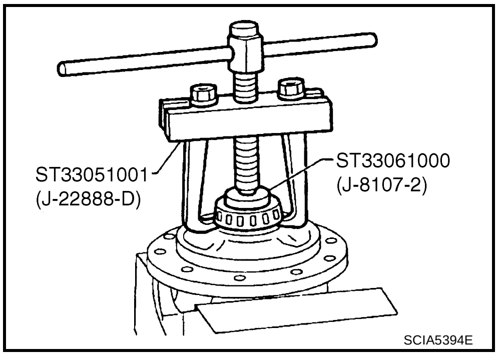

3. Remove differential side bearing outer race and differential side bearing adjusting shim from transaxle case.

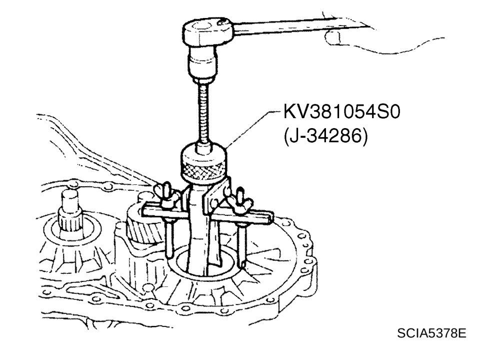

SCIA5378E

4. Drive out lock pin.

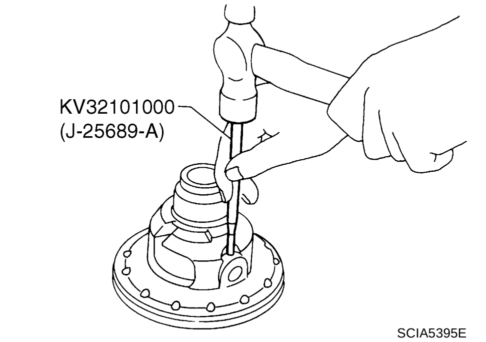

SCIA5395E

5. Draw out pinion mate shaft.
6. Remove pinion mate gears, pinion mate gear thrust washers, side gears and side gear thrust washers.

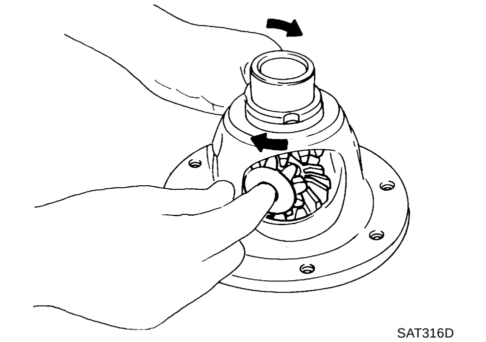
SAT316D

INSPECTION

Gears, Washers, Pinion Mate Shaft and Differential Case

- Check mating surfaces of differential case, side gears, pinion mate gears and pinion mate shaft.
- Check washers for wear.

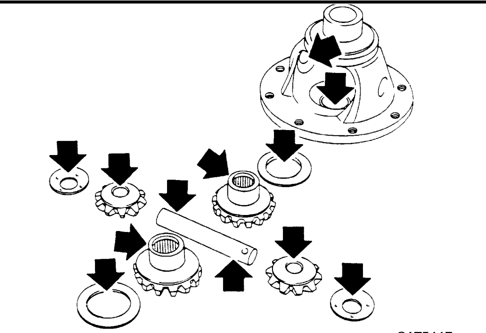
SAT544F

A B AT D E F G H I J K L M

Bearings

- Make sure bearings roll freely and are free from noise, cracks, pitting or wear.
- **When replacing taper roller bearing, replace outer and inner race as a set.**

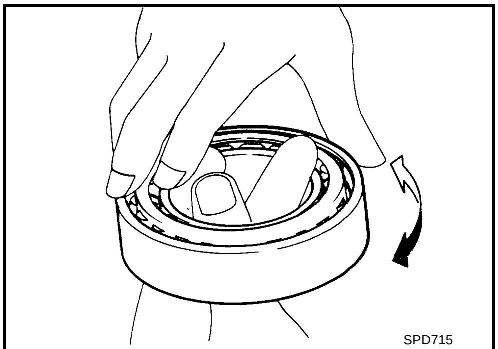
SPD715

ASSEMBLY

1. Attach side gear thrust washers to side gears, then install pinion mate thrust washers and pinion mate gears in place.

   CAUTION:
   Apply ATF to any parts.

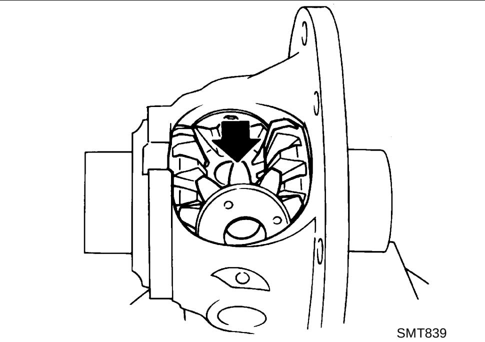
SMT839

2. Insert pinion mate shaft.

   CAUTION:
   When inserting, be careful not to damage pinion mate gear thrust washers.

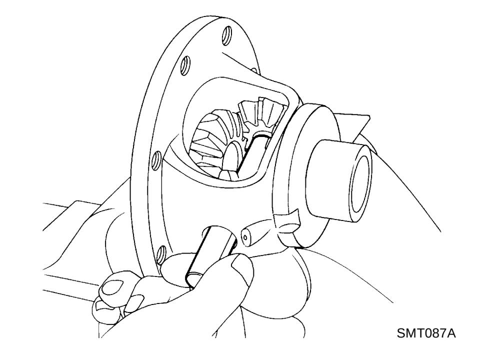
SMT087A

3. Measure clearance between side gear and differential case with washers following the procedure below:

a. Set SST and dial indicator on side gear.

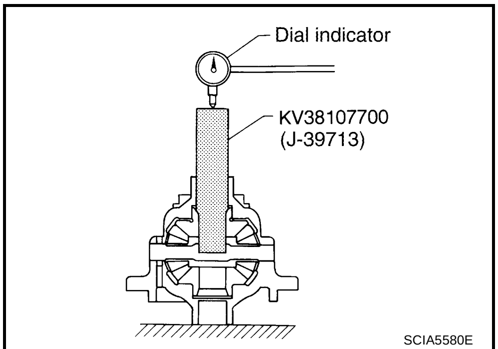

SCIA5580E

b. Move side gear up and down to measure dial indicator deflection. Always measure indicator deflection on both side gears.

Clearance between side gear and differential case with washer:	**0.1 - 0.2 mm (0.004 - 0.008 in)**

c. If not within specification, adjust clearance by changing thickness of differential side gear thrust washers. Refer to AT-380, "Final Drive" .

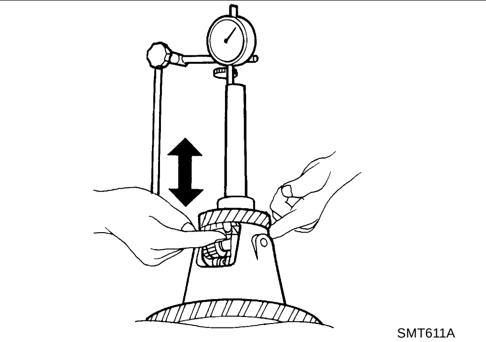
SMT611A

4. Install lock pin.

CAUTION:

- **Do not reuse lock pin.**
- **Make sure that lock pin is flush with case.**

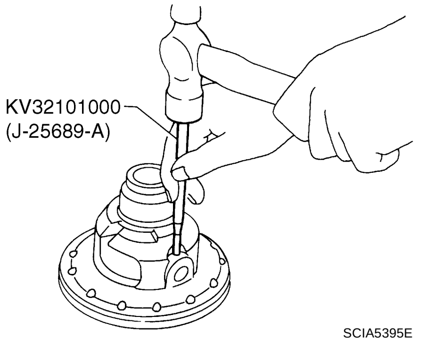

SCIA5395E

5. Press on differential side bearings.

CAUTION:

Apply ATF to differential side bearings.

6. Install differential side bearing outer race and differential side bearing adjusting shim on transaxle case. Refer to AT-354, "Adjustment (1)" .

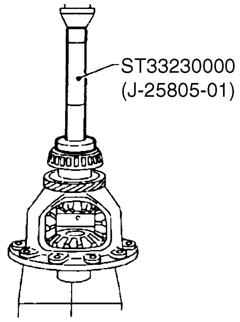

SCIA5397E

7. Tighten final gear and tighten fixing bolts to the specified torque in numerical order shown in the figure after temporarily tightening them. Refer to AT-349, "COMPONENTS" .

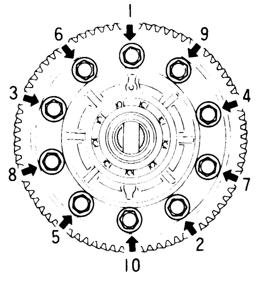

ATM0432D

ASSEMBLY

PFP:00000

Assembly (1)

ACS007VO

1. Install differential side oil seals on transaxle case and converter housing with tool.

   CAUTION:
   - **Do not reuse differential side oil seals.**
   - **Apply ATF to differential side oil seals.**

   Drift to be used:

Location	2WD models	AWD models
Transaxle case side (Left) Tool number (Kent-Moore No.)	ST33400001 (J-26082)	ST33400001 (J-26082)
Converter housing side (Right) Tool number (Kent-Moore No.)	ST33400001 (J-26082)	KV40100621 (J-25273)

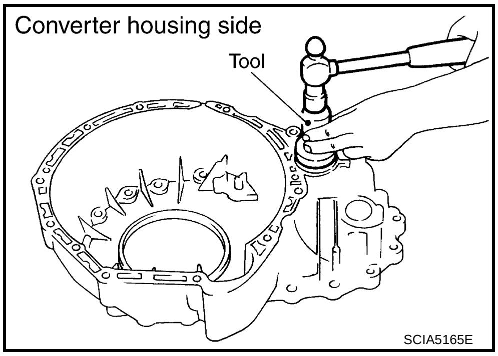

   - Drive the differential side oil seals into the case until it become flush using the drift below. Refer to dimensions A and B.

Unit: mm (in)

Dimensions A, B	0 ± 0.5 (0 ± 0.020)

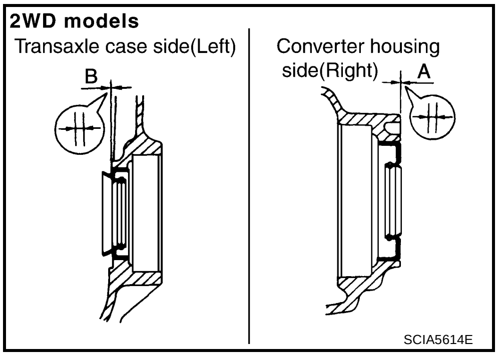

   NOTE:
   The differential side oil seal pulling direction is used as the reference.

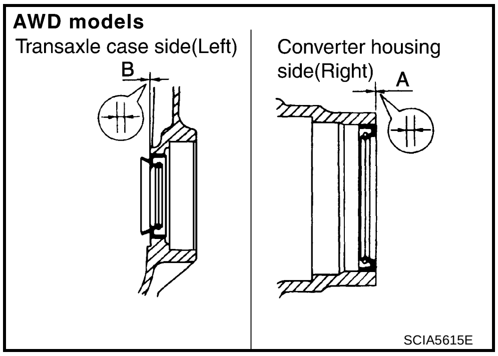

2. Install parking actuator support to transaxle case. Tighten parking actuator support bolts to the specified torque. Refer to AT-263, "Components" .

   CAUTION:
   Be careful with the direction of parking actuator support.

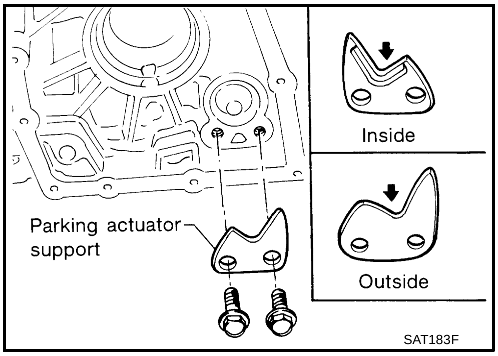

3. Install parking pawl on transaxle case and fix it with parking shaft.
4. Install return spring and parking pawl spacer.

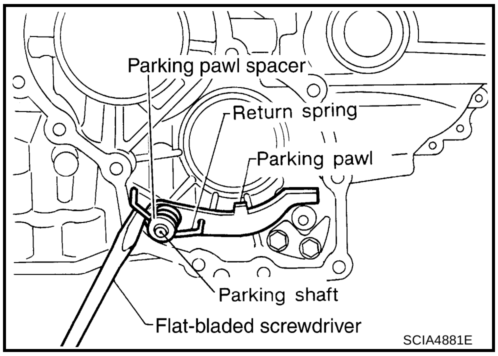

SCIA4881E

Adjustment (1)

ACS007VP

DIFFERENTIAL SIDE BEARING PRELOAD

1. Install differential side bearing outer race without differential side bearing adjusting shim on transaxle case.

   CAUTION:

   Apply ATF to differential side bearing outer race.
2. Install differential side bearing outer race on converter housing.

   CAUTION:

   Apply ATF to differential side bearing outer race.

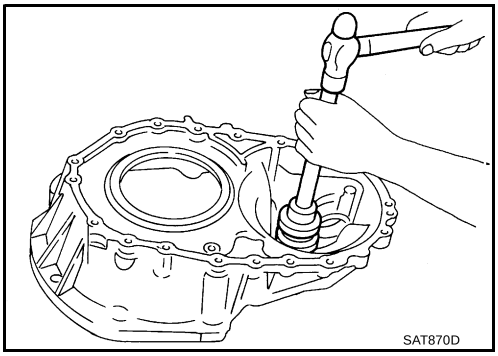
SAT870D

3. Place final drive assembly on transaxle case.
4. Install converter housing on transaxle case. Tighten converter housing mounting bolts to the specified torque. Refer to AT-263, "Components" .

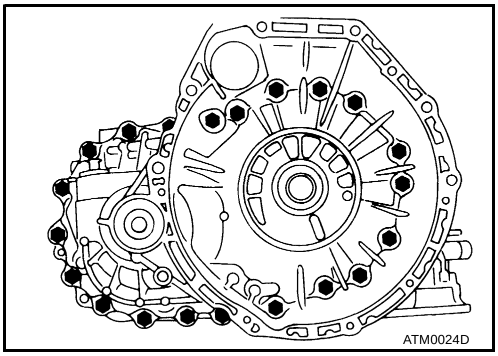
ATM0024D

5. Attach dial indicator on differential case at converter housing side.
6. Insert SST into differential side gear from transaxle case side.
7. Move SST up and down and measure dial indicator deflection.
8. Select proper thickness of differential side bearing adjusting shim(s). Refer to AT-381, "DIFFERENTIAL SIDE BEARING PRELOAD ADJUSTING SHIMS" .
Suitable shim thickness = Dial indicator deflection + Specified bearing preload

Bearing preload: 0.05 - 0.09 mm (0.0020 - 0.0035 in)

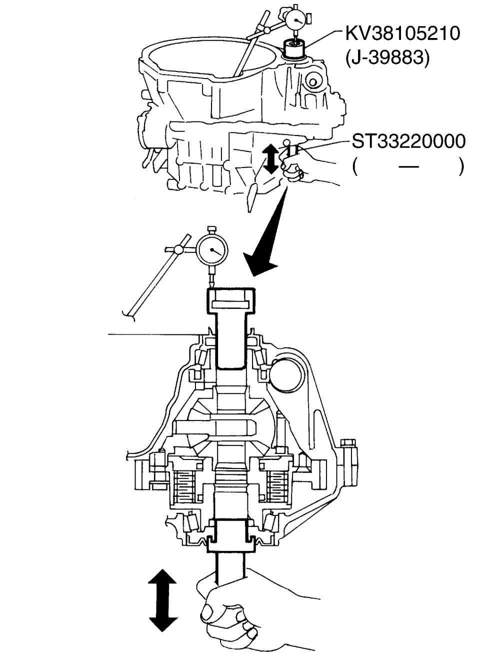

SCIA5512E

9. Remove converter housing from transaxle case.
10. Remove final drive assembly from transaxle case.
11. Remove differential side bearing outer race from transaxle case.
12. Reinstall differential side bearing outer race and differential side bearing adjusting shim selected from SDS table on transaxle case. Refer to AT-381, "DIFFERENTIAL SIDE BEARING PRELOAD ADJUSTING SHIMS" .
13. Reinstall converter housing on transaxle case and tighten converter housing mounting bolts to the specified torque. Refer to AT-263, "Components" .

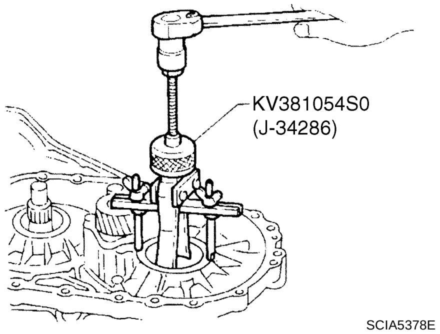

SCIA5378E

14. Insert SST and measure turning torque of final drive assembly.
   - **Turn final drive assembly in both directions several times to seat bearing rollers correctly.**

Turning torque of final drive assembly (New bearing):

0.78 - 1.37 N·m (8.0 - 14.0 kg-cm, 6.9 - 12.2 in-lb)

   - **When old bearing is used again, turning torque will be slightly less than the above.**
   - **Make sure torque is within the specified range.**

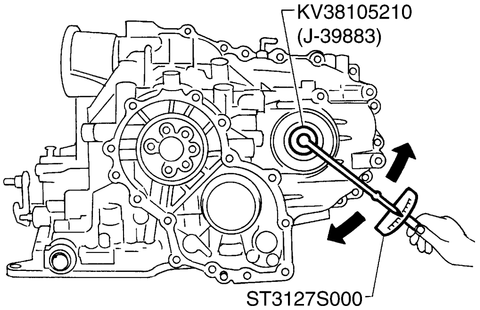

SCIA5513E

REDUCTION PINION GEAR BEARING PRELOAD

1. Remove converter housing and final drive assembly from transaxle case.
2. Select proper thickness of reduction pinion gear adjusting shim using the following procedures.
a. Place reduction pinion gear on transaxle case as shown.

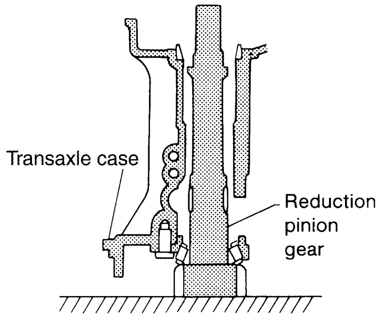

SCIA3623E

b. Place idler gear bearing on transaxle case.

c. Measure dimensions “B” “C” and “D” and calculate dimension “A”.

A = D – (B + C)

“A”: Distance between the surface of idler gear bearing inner race and the adjusting shim mating surface of reduction pinion gear.

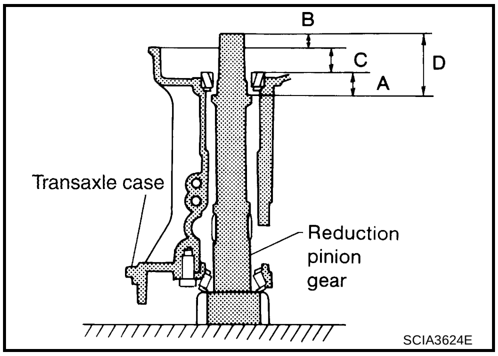

- Measure dimension “B” between the end of reduction pinion gear and the surface of transaxle case.
- **Measure dimension “B” in at least two places.**

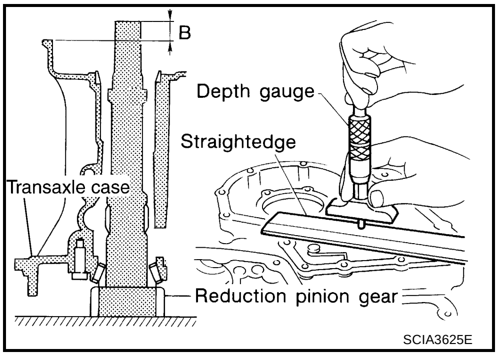

- Measure dimension “C” between the surface of idler gear bearing inner race and the surface of transaxle case.
- **Measure dimension “C” in at least two places.**

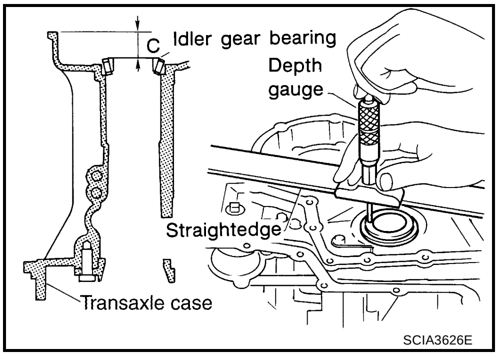

- Measure dimension “D” between the end of reduction pinion gear and the adjusting shim mating surface of reduction pinion gear.
- **Measure dimension “D” in at least two places.**
- Calculate dimension “A”.

A = D – (B + C)

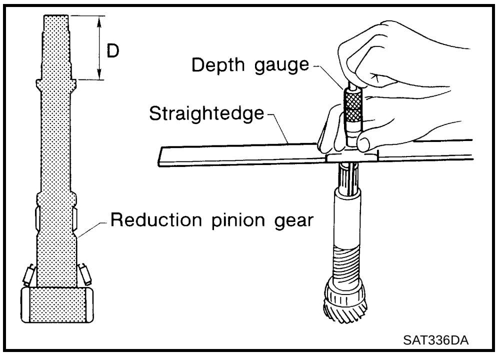

d. Measure dimension “E” between the end of idler gear and idler gear bearing inner race mating surface of idler gear.

- **Measure dimension “E” in at least two places.**

e. Select proper thickness of reduction pinion gear adjusting shim. Refer to AT-382, "REDUCTION PINION GEAR ADJUSTING SHIMS" .

Proper shim thickness = A – E – 0.05 mm (0.0020 in)*

(*: Bearing preload)

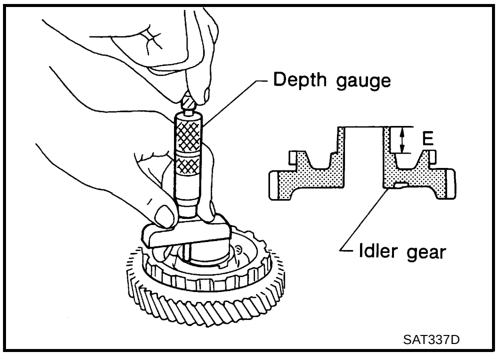

3. Install reduction pinion gear and reduction pinion gear adjusting shim selected in step 2-e on transaxle case.
4. Press idler gear bearing inner race on idler gear.

CAUTION:
- **Do not reuse idler gear bearing.**
- **Apply ATF to idler gear bearing.**

5. Press idler gear on reduction pinion gear.

CAUTION:
Press idler gear until idler gear fully contacts adjusting shim.

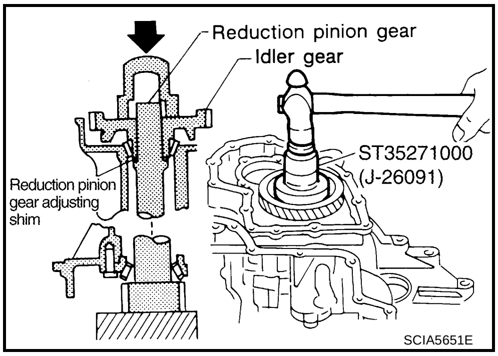

SCIA5651E

6. Set manual shaft to “P” position to fix idler gear.
7. Tighten idler gear lock nut to the specified torque. Refer to AT-263, "Components" .

CAUTION:
Lock idler gear with parking pawl when tightening lock nut.

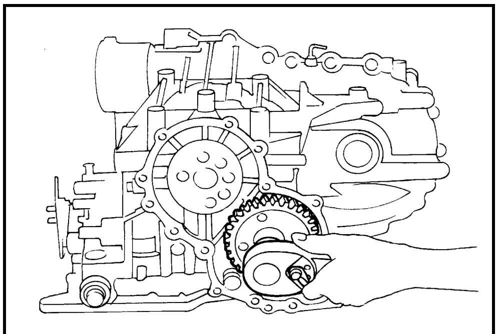
SAT189F

8. Measure turning torque of reduction pinion gear.
- **When measuring turning torque, turn reduction pinion gear in both directions several times to seat bearing rollers correctly.**

Turning torque of reduction pinion gear:	**0.05 - 0.39 N·m (0.5 - 4.0 kg-cm, 0.43 - 3.47 in-lb)**

- **If turning torque is out of specification, decrease or increase thickness of reduction pinion gear adjusting shim.**

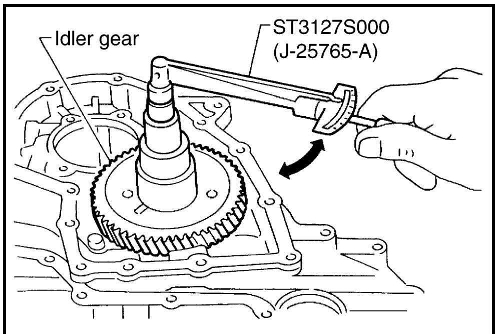

SCIA5514E

9. After properly adjusting turning torque, clinch idler gear lock nut as shown.

CAUTION:
Do not reuse idler gear lock nut.

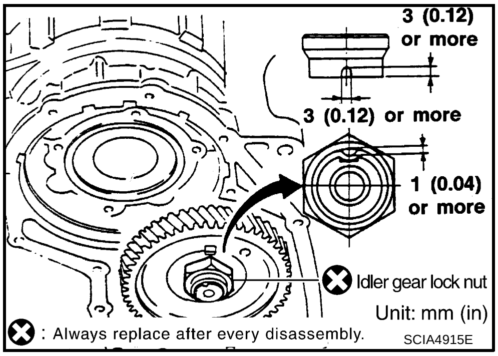

SCIA4915E

OUTPUT SHAFT END PLAY

- Measure clearance between side cover and the end of the output shaft bearing.
- Select proper thickness of output shaft adjusting shim so that clearance is within specifications.

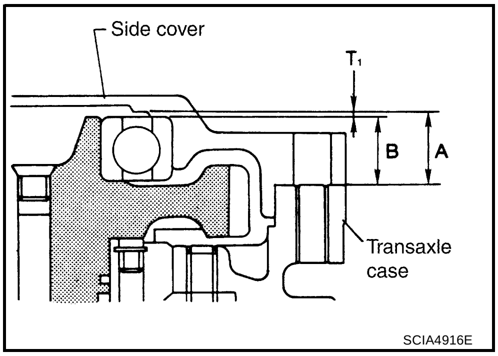

1. Install bearing retainer for output shaft. Refer to AT-263, "Components" .

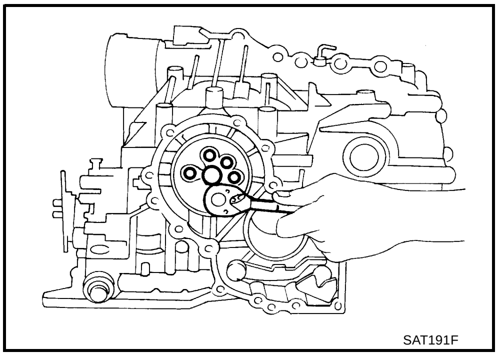

2. Install needle bearing on bearing retainer.

   CAUTION:
   - **Apply petroleum jelly to needle bearing.**
   - **Be careful with the direction of needle bearing.**

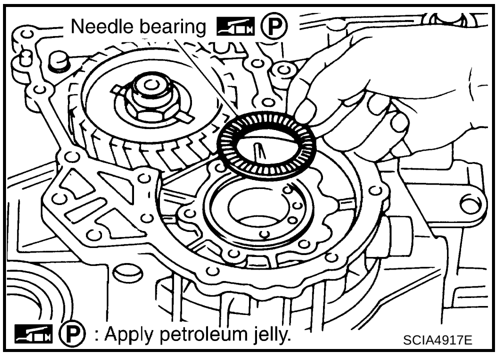

3. Install output shaft on transaxle case.

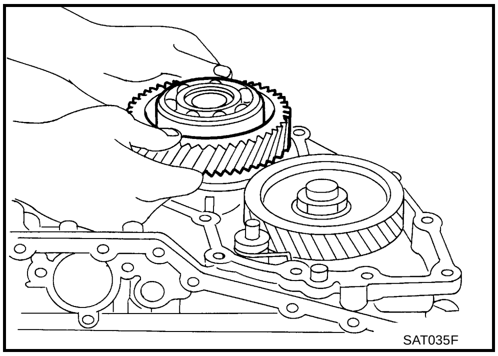

4. Measure dimensions “ℓ_1” and “ℓ_2” at side cover and then calculate dimension “A”.
   - Measure dimension “ℓ_1” and “ℓ_2” in at least two places.

     “A”: Distance between transaxle case fitting surface and adjusting shim mating surface.

     A = ℓ_1 – ℓ_2

     ℓ_2: Height of gauge

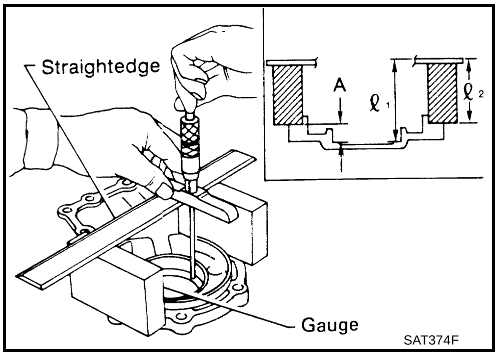

5. Measure dimensions “ℓ_2” and “ℓ_3” and then calculate dimension “B”.
   - Measure dimension “ℓ_2” and “ℓ_3” in at least two places.

     “B”: Distance between the end of output shaft bearing outer race and the side cover fitting surface of transaxle case.

     B = ℓ_2 – ℓ_3

     ℓ_2: Height of gauge

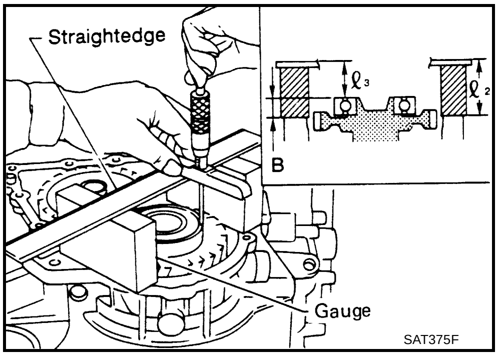

6. Select proper thickness of output shaft adjusting shim so that output shaft end play (clearance between side cover and output shaft bearing) is within specifications. Refer to AT-383, "OUTPUT SHAFT ADJUSTING SHIMS" .

   Output shaft end play (A – B): 0 - 0.15 mm (0 - 0.0059 in)

7. Install output shaft adjusting shim on output shaft bearing.

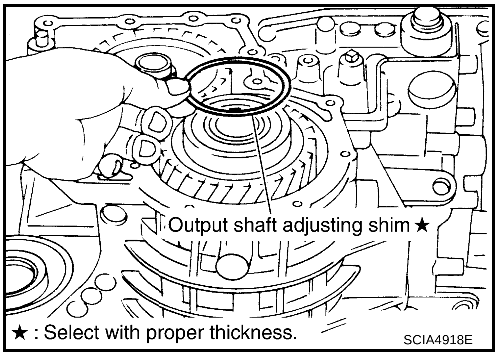

Assembly (2)

ACS007VQ

1. Apply recommended sealant (Genuine Anaerobic Liquid Gasket or equivalent. Refer to GI-48, "Recommended Chemical Products and Sealants" .) to transaxle case as shown in the figure.

   CAUTION:

   Completely remove all moisture, oil and old sealant, etc. from the transaxle case and side cover mounting surface.

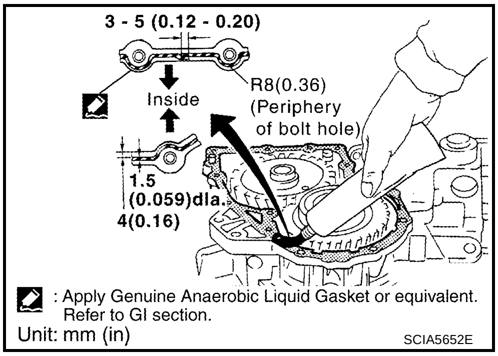

2. Fit mounting part of output shaft bearing on side cover to output shaft bearing, and after adjusting knock pin position, install it with light taps of a soft hammer and things like that.

   CAUTION:

   When installing, to avoid getting damaged and deformed, set mounting part straight to parallel with the mounting surface.

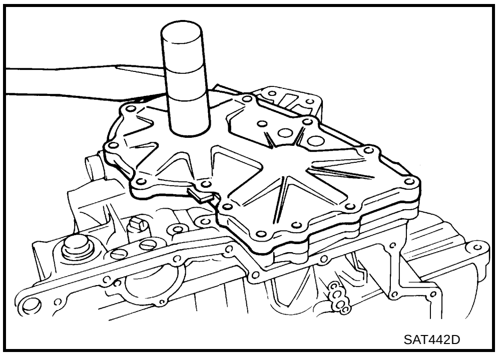

A B AT D E F G H I J K L M

3. Tighten side cover fitting bolts to the specified torque. Refer to AT-263, "Components" .

CAUTION:

- **Do not mix bolts A and B.**
- **Always replace bolts A as they are self-sealing bolts.**

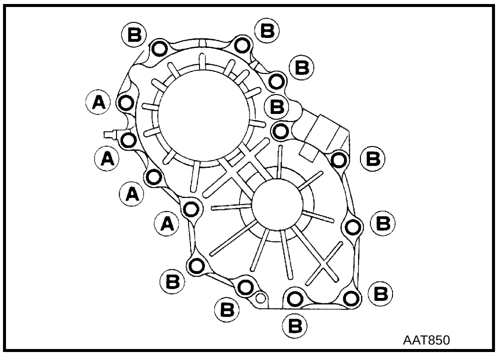

4. Install needle bearing on transaxle case.

CAUTION:

- **Apply petroleum jelly to needle bearing.**
- **Be careful with the direction of needle bearing.**

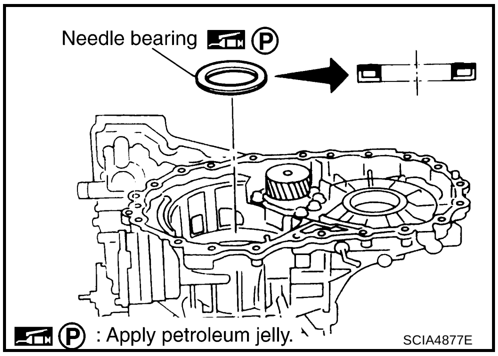

5. Install forward clutch assembly.

CAUTION:

- **Align teeth of low & reverse brake before installing.**
- **Make sure that bearing retainer seal rings are not spread.**
- **If forward clutch assembly is correctly seated, points 1 and 2 are at almost same level.**

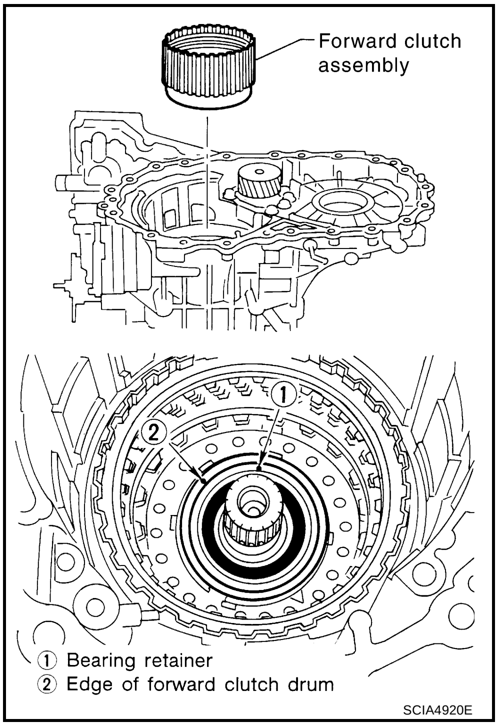

6. Install needle bearing.

CAUTION:

- **Apply petroleum jelly to needle bearing.**
- **Be careful with the direction of needle bearing.**

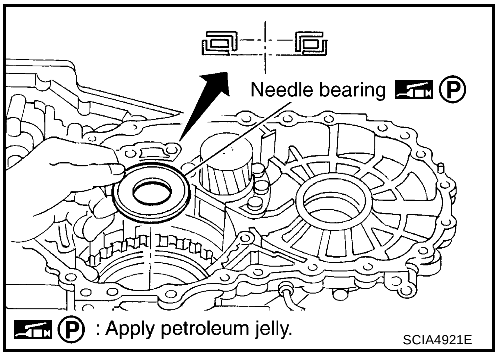

7. Install overrun clutch hub.

CAUTION:

Align teeth of overrun clutch before installing.

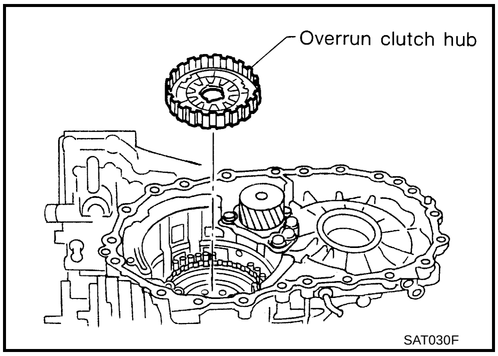

SAT030F

8. Check operation of forward one-way clutch.

CAUTION:

- **Hold rear internal gear and turn forward clutch hub. Check forward clutch hub for correct locking and unlocking directions.**
- **If not as shown in the figure, check installation direction of forward one-way clutch.**

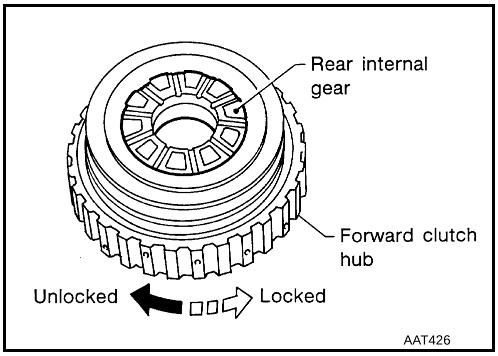

AAT426

9. Install forward clutch hub and rear internal gear on transaxle case.

CAUTION:

- **Align teeth of forward clutch before installing.**
- **Make sure that three pawls of thrust washer are correctly aligned after installing.**

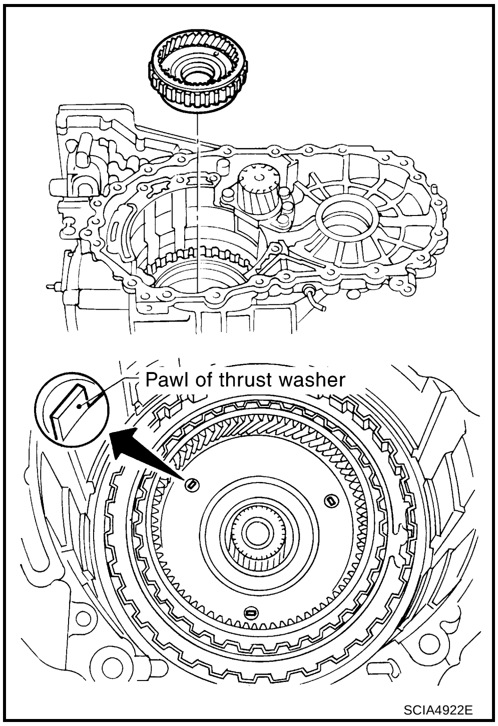

SCIA4922E

10. Install rear planetary carrier and rear sun gear according to the following procedures.

a. Install needle bearings on rear planetary carrier.

CAUTION:

- **Apply petroleum jelly to needle bearings.**
- **Be careful with the direction of needle bearings.**

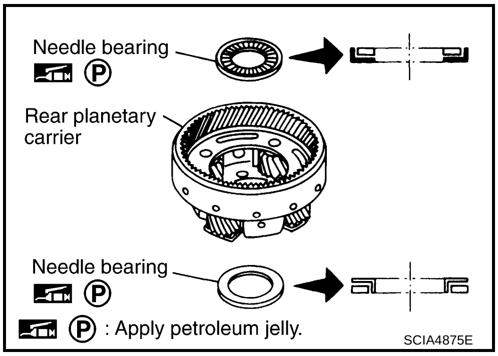

SCIA4875E

b. Install rear sun gear on rear planetary carrier.

CAUTION:

Be careful with the direction of rear sun gear.

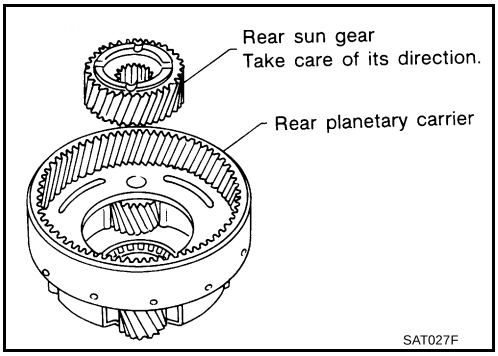

c. Install rear planetary carrier (with rear sun gear) on transaxle case.

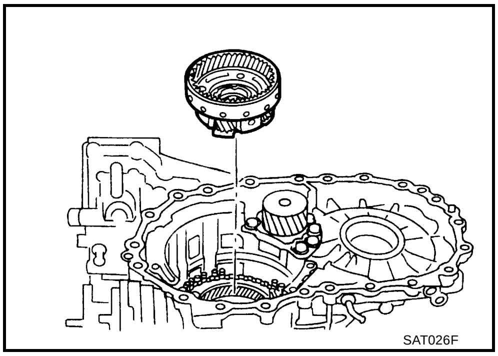

11. Install needle bearing on front planetary carrier, then install them together on transaxle case.

CAUTION:

- **Apply petroleum jelly to needle bearing.**
- **Be careful with the direction of needle bearing.**

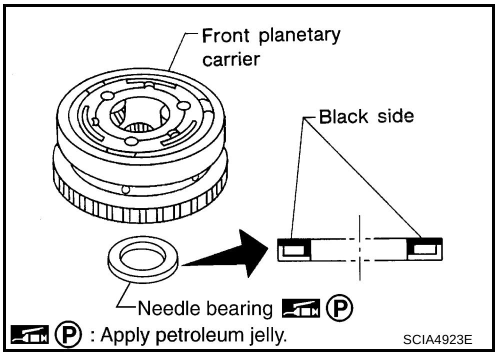

12. Install low & reverse brake piston according to the following procedures.

a. Set and align return springs to transaxle case gutters as shown in the figure.

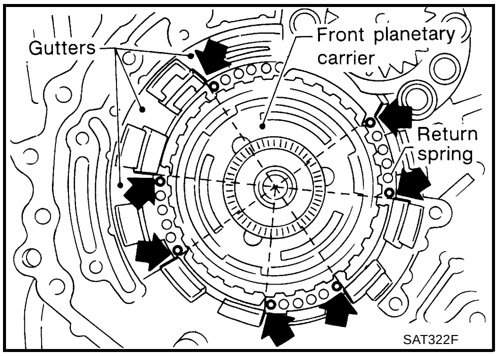

b. Set and align low & reverse brake piston with retainer.

CAUTION:

Apply ATF to the surface of low & reverse brake piston and retainer.

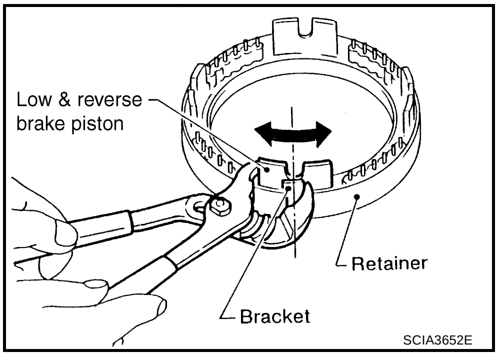

c. Install low & reverse brake piston and retainer on transaxle case.

CAUTION:

Align bracket to specified gutter as indicated in the figure.

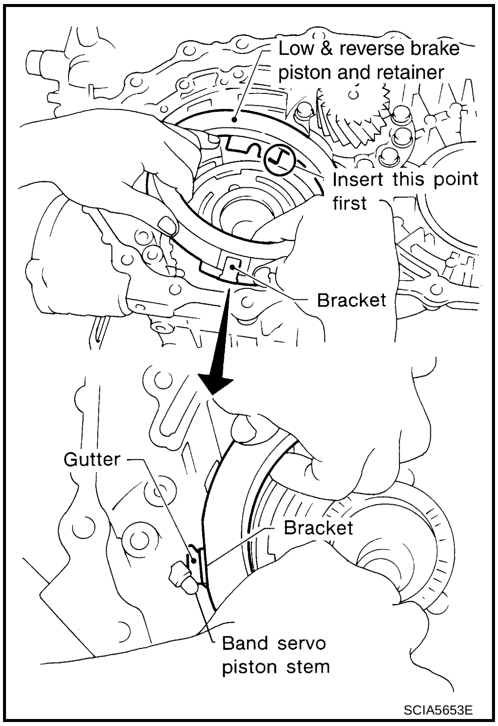

d. Make sure that each protrusion of low & reverse brake piston is correctly set to corresponding return spring as follows.

- **Push low & reverse brake piston and retainer evenly and confirm they move smoothly.**
- **If they cannot move smoothly, remove low & reverse brake piston and retainer and align return spring correctly as instructed in step "a".**

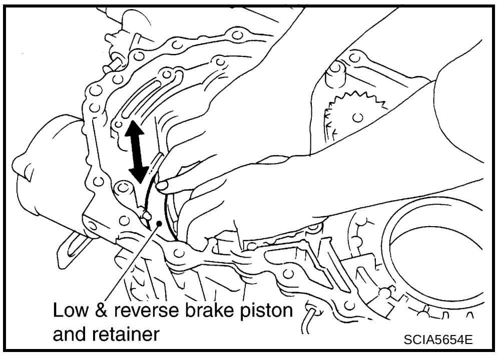

e. Push down low & reverse brake piston and retainer and install snap ring.

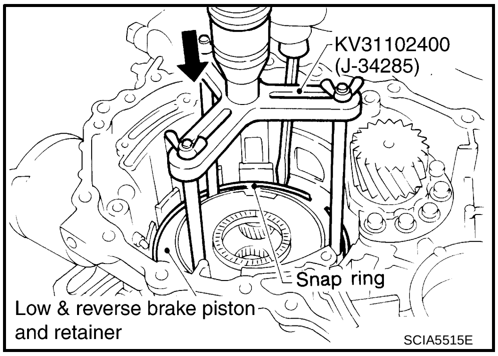

13. Install low one-way clutch to front planetary carrier by turning carrier in the direction of arrow shown.

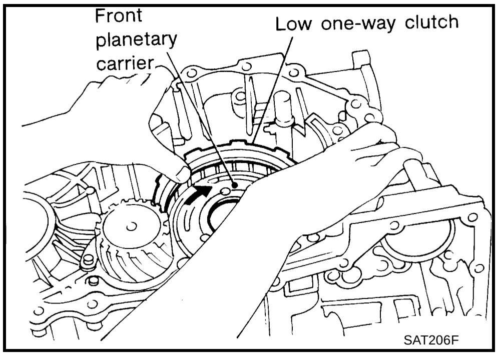

14. Install snap ring with flat-bladed screwdriver.

    CAUTION:

    Forward clutch and bearing must be correctly installed for snap ring to fit into groove of transaxle case.

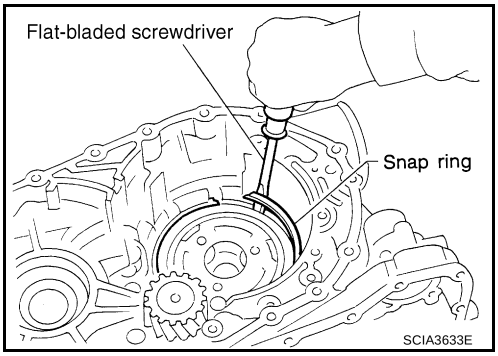

15. Install front sun gear according to the following procedures.

a. Install bearing race on front sun gear.

   CAUTION:

   Apply petroleum jelly to bearing race.

b. Install needle bearing on front sun gear.

   CAUTION:

   - **Apply petroleum jelly to needle bearing.**
   - **Be careful with the direction of needle bearing.**

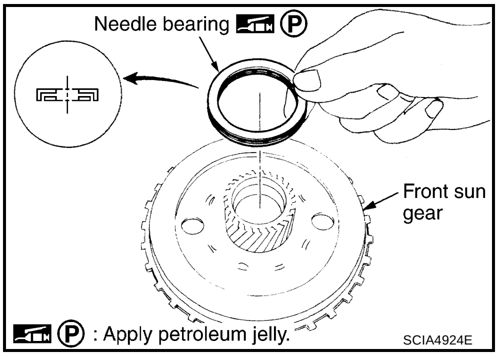

c. Install front sun gear on front planetary carrier.

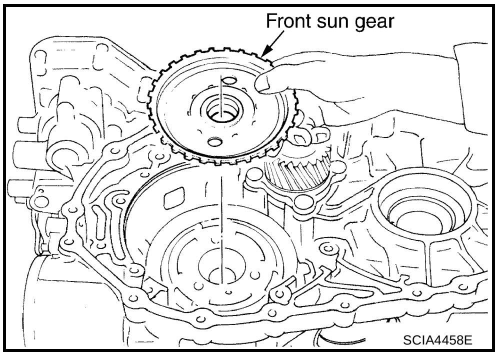

16. Install high clutch hub according to the following procedures.

a. Install needle bearing on front sun gear.

   CAUTION:

   - **Apply petroleum jelly to needle bearing.**
   - **Be careful with the direction of needle bearing.**

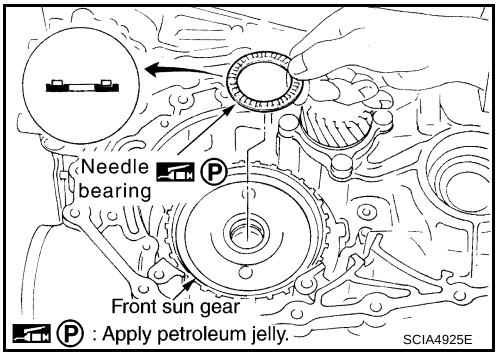

b. Install high clutch hub on front sun gear.

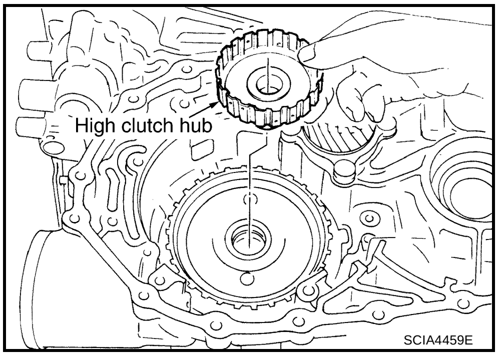

17. Install input shaft assembly (high clutch assembly) according to the following procedures.

a. Install needle bearing on high clutch hub.

CAUTION:

- **Apply petroleum jelly to needle bearing.**
- **Be careful with the direction of needle bearing.**

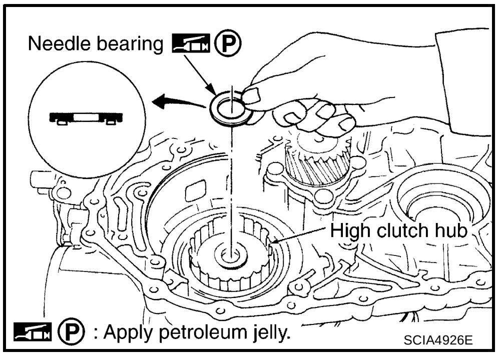

b. Install input shaft assembly (high clutch assembly) on high clutch hub.

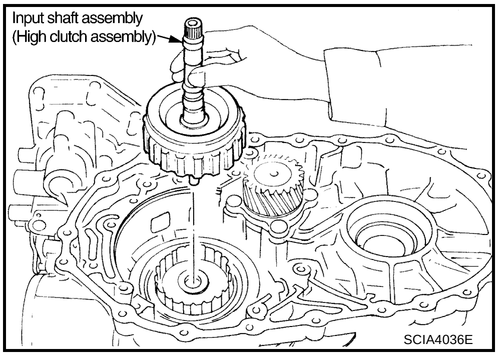

c. Install needle bearing on input shaft assembly (high clutch drum).

CAUTION:

- **Apply petroleum jelly to needle bearing.**
- **Be careful with the direction of needle bearing.**

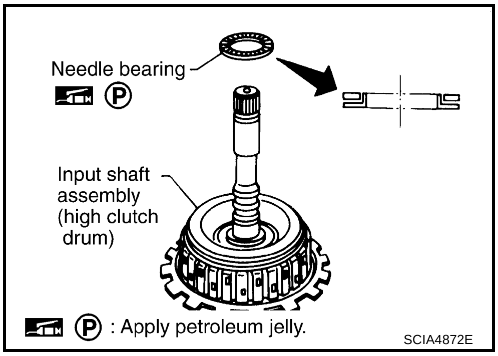

18. Install reverse clutch assembly on input shaft assembly (high clutch drum).

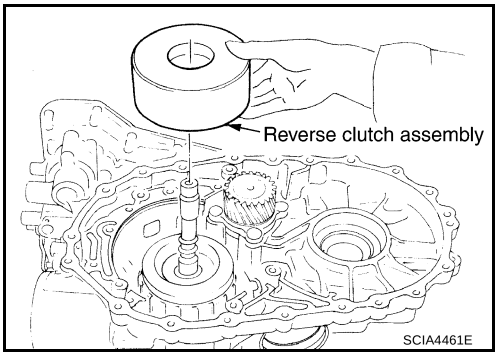

SCIA4461E

Adjustment (2)

ACS007VR

When any parts listed below are replaced, adjust total end play and reverse clutch end play.

Part name	Total end play	Reverse clutch end play
transaxle case	●	●
Overrun clutch hub	●	●
Rear internal gear	●	●
Rear planetary carrier	●	●
Rear sun gear	●	●
Front planetary carrier	●	●
Front sun gear	●	●
High clutch hub	●	●
Input shaft assembly (high clutch drum)	●	●
Oil pump cover	●	●
Reverse clutch drum	—	●

TOTAL END PLAY

- Measure clearance between reverse clutch drum and needle bearing for oil pump cover.
- Select proper thickness of bearing race so that end play is within specifications.

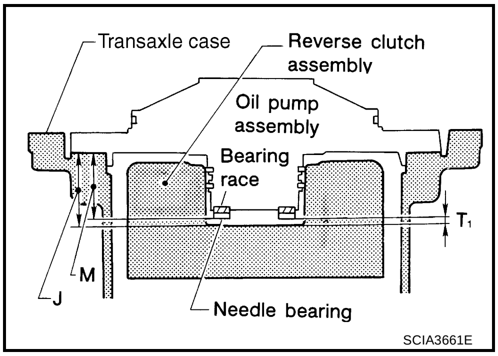

SCIA3661E

1. Measure dimensions “K” and “L” and then calculate dimension “J”.

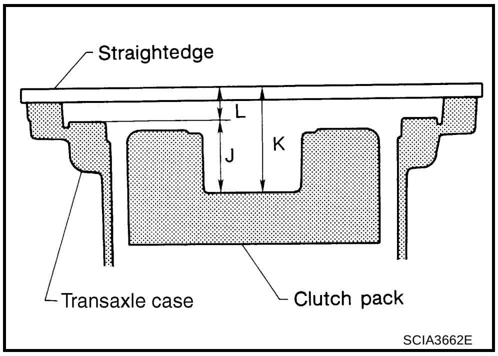

SCIA3662E

a. Measure dimension “K”.

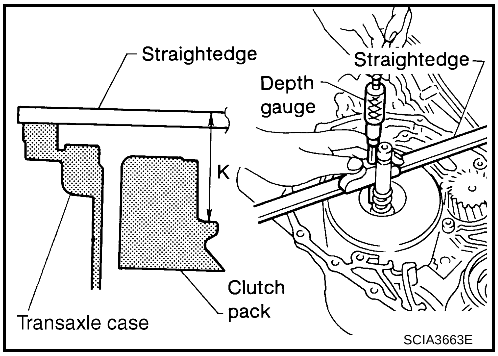

b. Measure dimension “L”.

c. Calculate dimension “J”.

“J”: Distance between oil pump fitting surface of transaxle case and needle bearing mating surface of input shaft assembly (high clutch drum).

J = K – L

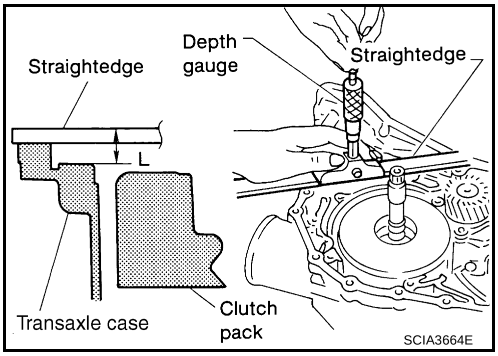

2. Measure dimension “M”.

a. Place bearing race and needle bearing on oil pump assembly.

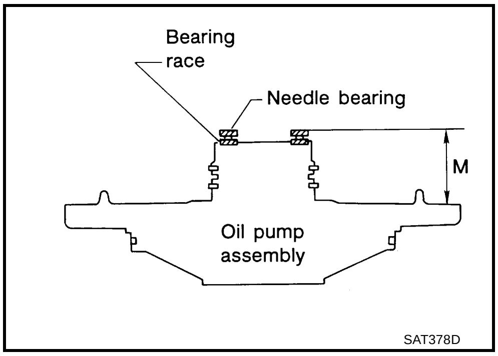

b. Measure dimension “M”.

“M”: Distance between transaxle case fitting surface of oil pump cover and needle bearing on oil pump cover.

“M_1 ”: Indication of gauge.

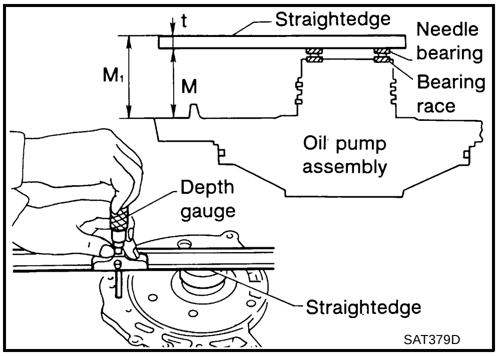

c. Measure thickness of straightedge “t”.

$M = M_1 - t$

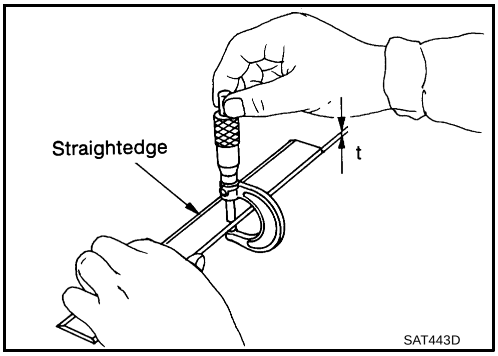

3. Adjust total end play "T_1".

T_1 = J – M

Total end play "T_1":

0.25 - 0.55 mm (0.0098 - 0.0217 in)

- Select proper thickness of bearing race so that total end play is within specifications. Refer to AT-383, "Total End Play" .

REVERSE CLUTCH END PLAY

- Measure clearance between oil pump cover and thrust washer for reverse clutch drum.
- Select proper thickness of thrust washer so that end play is within specification.

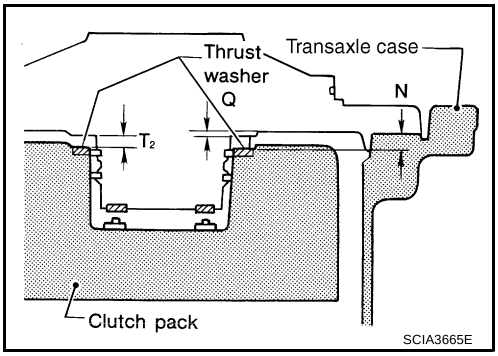

1. Measure dimensions "O" and "P" and then calculate dimension "N".

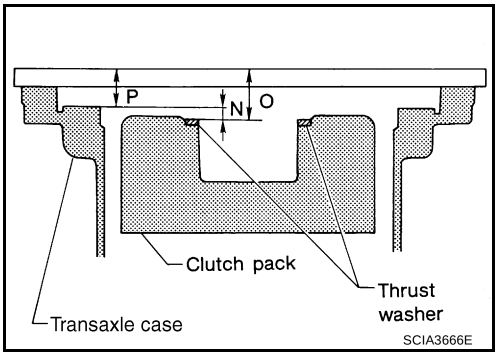

a. Place thrust washer on reverse clutch drum.

b. Measure dimension "O".

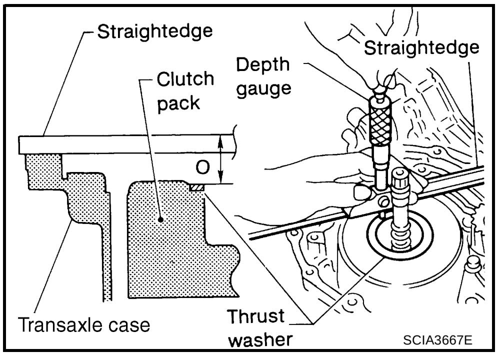

c. Measure dimension "P".

d. Calculate dimension "N".

"N": Distance between oil pump fitting surface of transaxle case and thrust washer on reverse clutch drum.

N = O – P

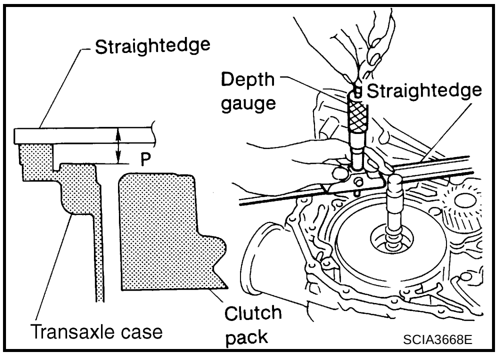

A
B
AT
D
E
F
G
H
I
J
K
L
M

2. Measure dimensions “R” and “S” and then calculate dimension “Q”.

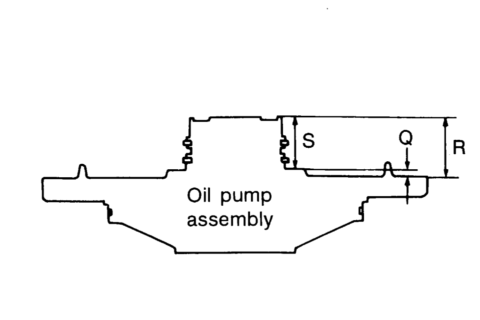

SAT384D

a. Measure dimension “R”.

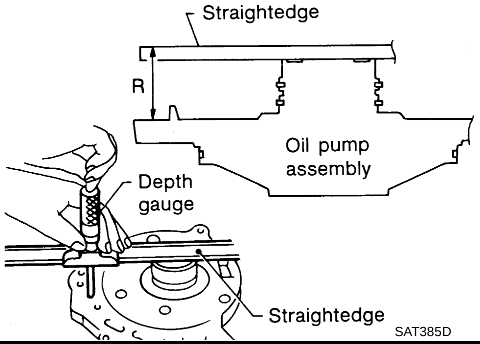

SAT385D

b. Measure dimension “S”.
c. Calculate dimension “Q”.

“Q”: Distance between transaxle case fitting surface and thrust washer mating surface.

Q = R – S

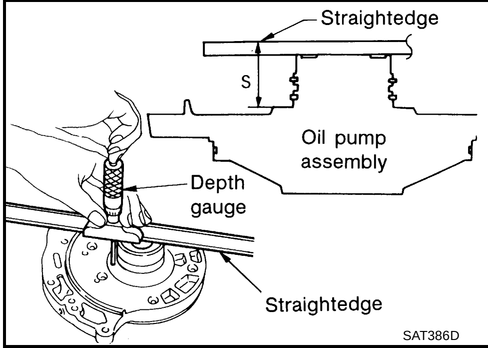

SAT386D

3. Adjust reverse clutch end play “T_2 ”.

T_2 = N – Q

Reverse clutch end play:

0.61 - 1.0 mm (0.0240 - 0.039 in)

- Select proper thickness of thrust washer so that reverse clutch end play is within specifications. Refer to AT-383, "Reverse Clutch End Play" .

Assembly (3)

ACS007VS

1. Install anchor end pin and lock nut on transaxle case.

CAUTION:

Do not reuse anchor end pin.

2. Place brake band and strut on outside of reverse clutch drum. Tighten anchor end pin just enough so that brake band is evenly fitted on reverse clutch drum.

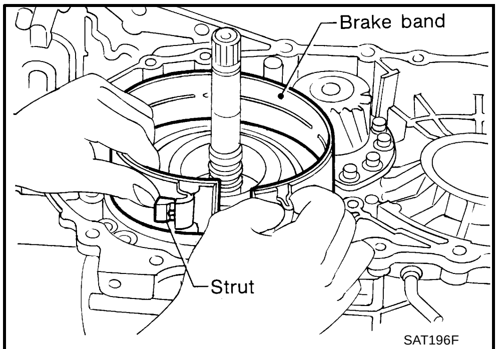

SAT196F

3. Place bearing race selected in total end play adjustment step on oil pump cover.

   CAUTION:

   Apply petroleum jelly to bearing race.

4. Place thrust washer selected in reverse clutch end play step on reverse clutch drum.

   CAUTION:

   Apply petroleum jelly to thrust washer.

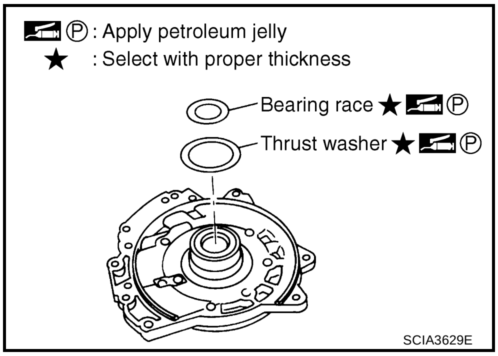

5. Install oil pump assembly and gasket on transaxle case.

   CAUTION:

   - **Do not reuse gasket.**
   - **Completely remove all moisture, oil and old gasket, etc. from oil pump assembly mounting surface.**

6. Tighten oil pump fitting bolts to the specified torque. Refer to AT-263, "Components" .

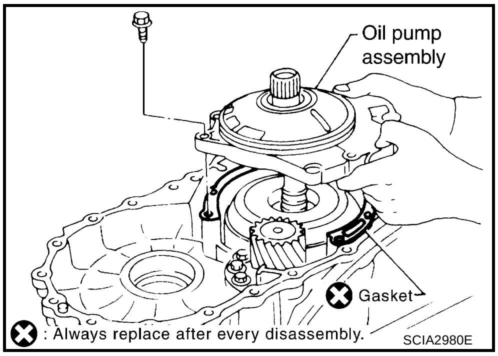

7. Install O-ring to input shaft assembly (high clutch drum).

   CAUTION:

   - **Do not reuse O-ring.**
   - **Apply petroleum jelly to O-ring.**

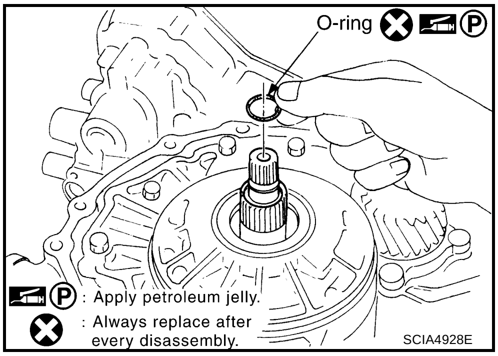

8. Adjust brake band.

   CAUTION:

   Do not reuse anchor end pin.

   a. Tighten anchor end pin to the specified torque.

      : 4.9 N·m (0.50 kg-m, 43 in-lb)

   b. Back off anchor end pin two and a half turns.

   c. While holding anchor end pin, tighten lock nut. Refer to AT-380, "BRAKE BAND" .

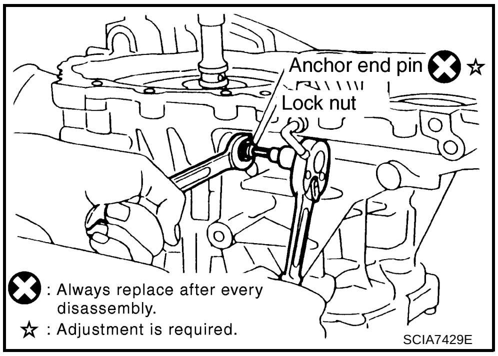

9. Apply compressed air to oil holes of transaxle case and check operation of brake band.

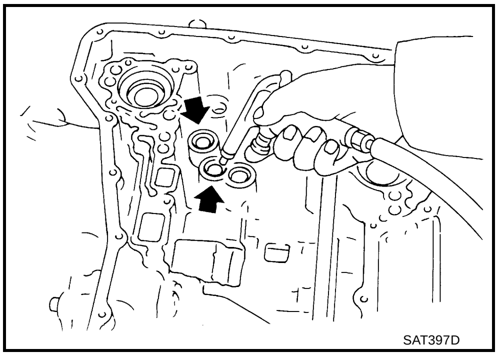

10. Install final drive assembly on transaxle case.

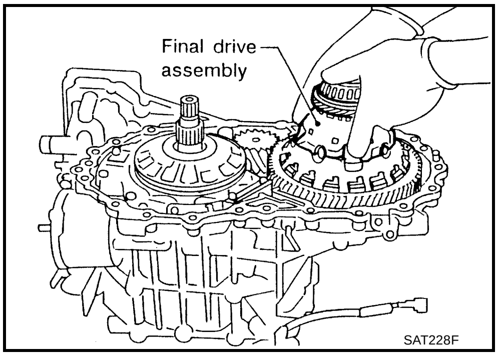

11. Install differential lubricant tube on converter housing. Tighten differential lubricant tube bolts to the specified torque. Refer to AT-263, "Components" .

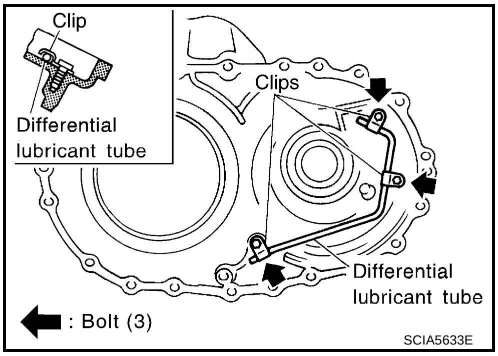

12. Install O-ring on differential oil port of transaxle case.

CAUTION:
- **Do not reuse O-ring.**
- **Apply ATF to O-ring.**

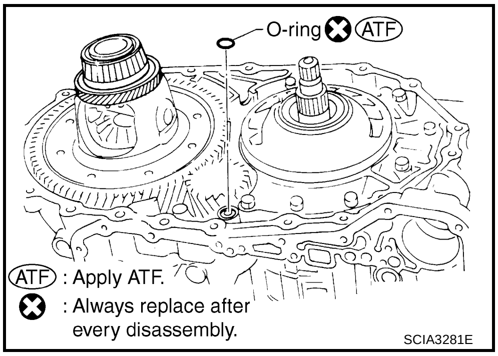

13. Apply recommended sealant (Genuine Anaerobic Liquid Gasket or equivalent. Refer to GI-48, "Recommended Chemical Products and Sealants" .) to transaxle case as shown in the figure.

CAUTION:
Completely remove all moisture, oil and old sealant, etc. from the transaxle case and converter housing mounting surface.

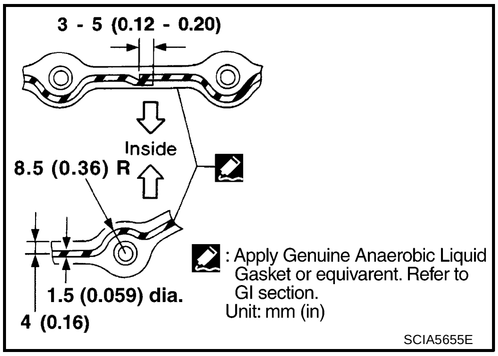

14. Install converter housing on transaxle case. Tighten converter housing mounting bolts to the specified torque. Refer to AT-263, "Components" .
15. Install O-ring on plug. (For 2WD models)

CAUTION:
Do not reuse O-ring.

16. Install plug on converter housing. (For 2WD models)

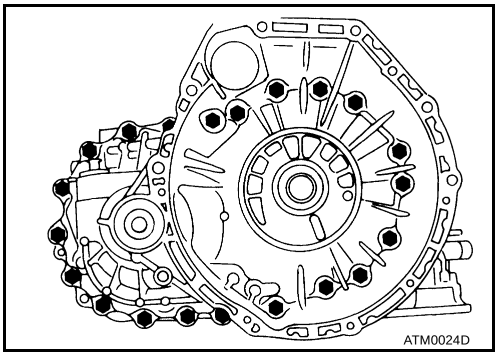

17. Install accumulator pistons.
a. Check contact surface of accumulator piston for damage.

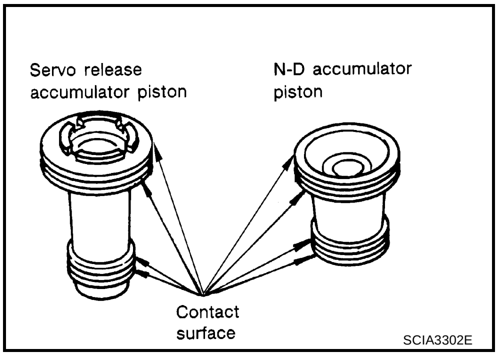

b. Install O-rings on accumulator pistons. Refer to AT-377, "O-RING" .

CAUTION:
- **Do not reuse O-rings.**
- **Apply ATF to O-rings.**

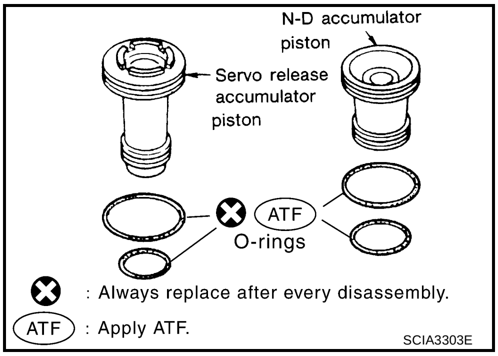

c. Install accumulator pistons and return springs on transaxle case. Refer to AT-378, "RETURN SPRING" .

CAUTION:
Apply ATF to inner surface of transaxle case.

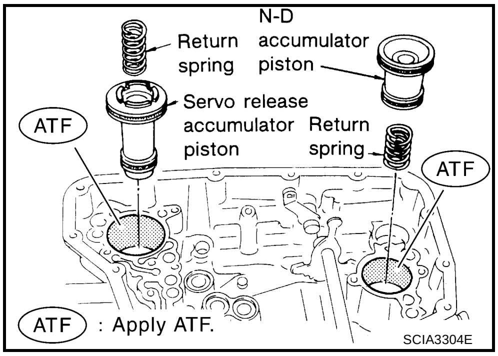

18. Install lip seals for band servo oil holes on transaxle case.

CAUTION:
- **Do not reuse lip seals.**
- **Apply ATF to lip seals.**

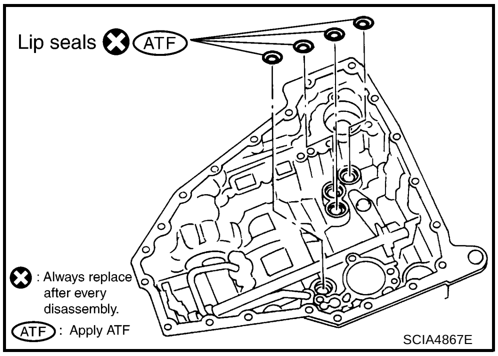

19. Install low & reverse brake tube and oil sleeve. Tighten Low & reverse brake tube bolts to the specified torque. Refer to AT-263, "Components" .

CAUTION:
- **Do not reuse oil sleeve.**
- **Apply ATF to oil sleeve.**

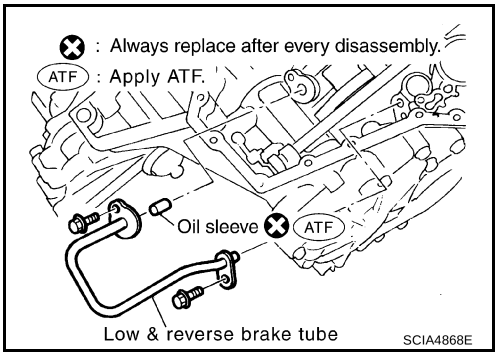

20. Install control valve assembly.

a. Install O-ring to terminal body.

CAUTION:

- **Do not reuse O-ring.**
- **Apply ATF to O-ring.**

b. Insert manual valve into control valve assembly.

CAUTION:

Apply ATF to manual valve.

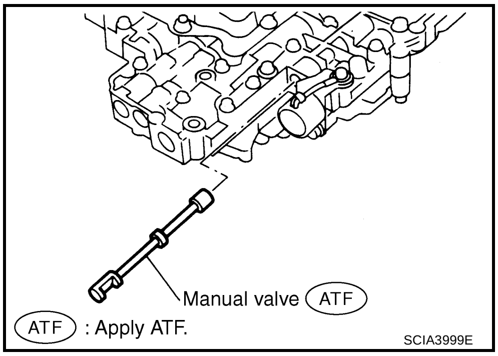

c. Set manual shaft in “N” position.

d. Install control valve assembly on transaxle case while aligning manual valve with manual plate.

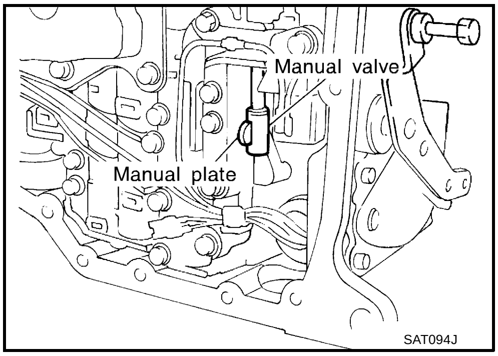

e. Pass terminal cord assembly through transaxle case and install terminal body on transaxle case by pushing it.

f. Install snap ring to terminal body.

CAUTION:

Do not expand snap ring excessively.

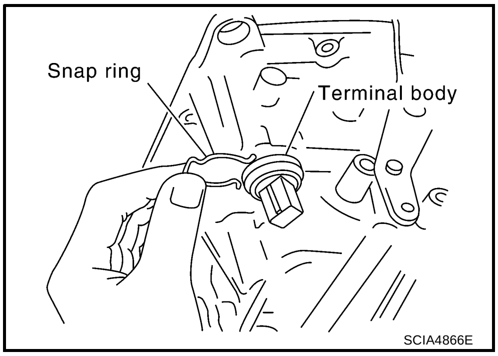

g. Tighten control valve assembly fixing bolts **A** , **B** and **C** to the specified torque. Refer to AT-263, "Components" .

Bolt length, number and location:

Bolt symbol	A	B	C
Bolt length " ℓ " mm (in)	40.0 (1.575)	33.0 (1.299)	43.5 (1.713)
Number of bolts	5	6	2

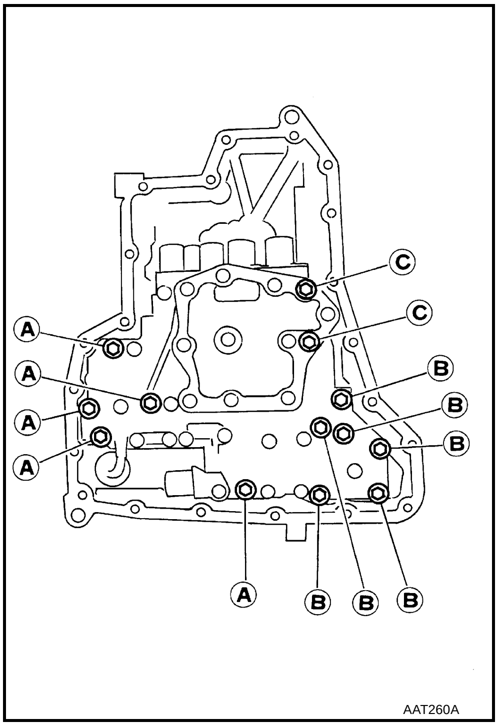

21. Install oil pan.
a. Attach a magnets to oil pan.
b. Install oil pan gasket on oil pan.

CAUTION:

- **Do not reuse oil pan gasket.**
- **Completely remove all moisture, oil and old gasket, etc. from oil pan gasket mounting surface.**

c. Install oil pan (with oil pan gasket) on transaxle case.

CAUTION:

Completely remove all moisture, oil and old gasket, etc. from oil pan gasket mounting surface.

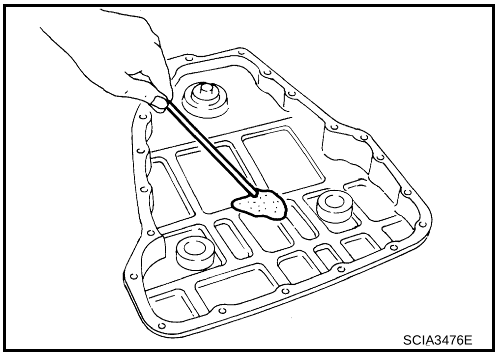

d. Tighten oil pan fitting bolts to the specified torque. Refer to AT-263, "Components" .

CAUTION:

- **Always replace oil pan fitting bolts as they are self-sealing bolts.**
- **Tighten four bolts in a crisscross pattern to prevent dislocation of oil pan gasket.**

e. Install drain plug gasket on drain plug.

CAUTION:

Do not reuse drain plug gasket.

f. Tighten drain plug to the specified torque. Refer to AT-263, "Components" .

22. Install PNP switch.
a. Set manual shaft in "P" position.
b. Temporarily install PNP switch on manual shaft.
c. Move manual shaft to "N" position.

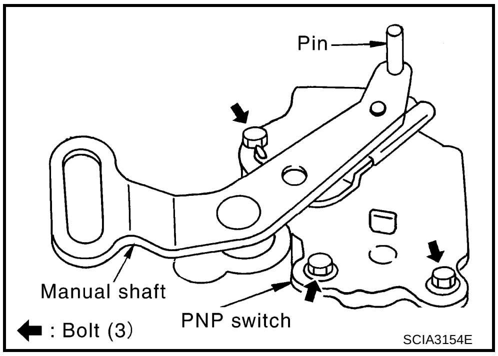

d. Use a 3 mm (0.12 in) pin for this adjustment.

i. Insert the pin straight into the manual shaft adjustment hole.

ii. Rotate PNP switch until the pin can also be inserted straight into hole in PNP switch.

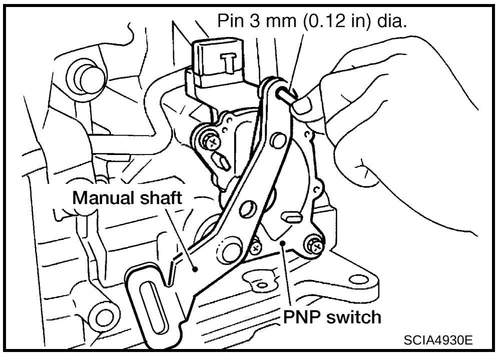

e. Tighten PNP switch fitting bolts. Refer to AT-263, "Components" .

f. Remove pin from adjustment hole after adjusting PNP switch.

23. Install bracket on transaxle case.

24. Install O-ring on revolution sensor.

CAUTION:

- **Do not reuse O-ring.**
- **Apply petroleum jelly to O-ring.**

25. Install revolution sensor on transaxle case.

26. Install torque converter.

a. Pour ATF into torque converter.

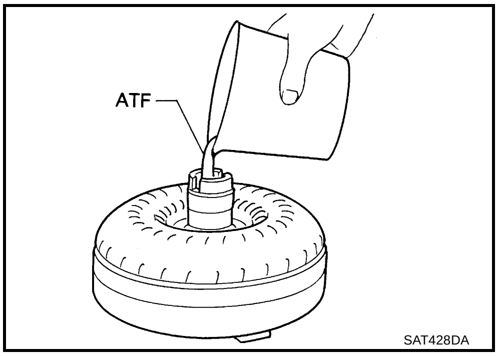

CAUTION:

- **Approximately 1 liter (1-1/8 US qt, 7/8 Imp qt) of fluid is required for a new torque converter.**
- **When reusing old torque converter, add the same amount of fluid as was drained.**

b. Install torque converter while aligning notches of torque converter with notches of oil pump.

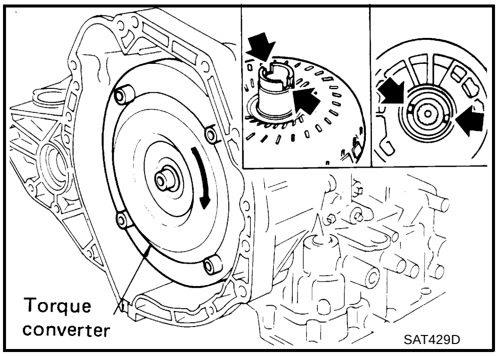

c. Measure distance “A” to Make sure that torque converter is in proper position.

Distance “A”: 14 mm (0.55 in) or more

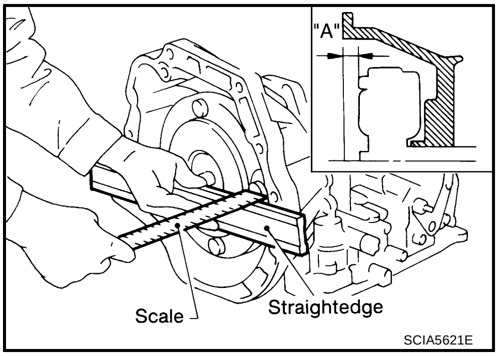

SERVICE DATA AND SPECIFICATIONS (SDS)

PFP:00030

General Specifications

ACS007VT

Engine		QR25DE	
Axle type		2WD	AWD
Automatic transaxle model		RE4F04B	
Automatic transaxle assembly	Model code number	85X65	85X64
Transaxle gear ratio	1st	2.785	
	2nd	1.545	
	3rd	1.000	
	4th	0.694	
	Reverse	2.272	
	Final drive	4.087	
Recommended fluid		NISSAN Automatic Transmission Fluid (ATF), DEXRONTM III/ MERCONTM, or equivalent ATF*	
Fluid capacity ℓ (US qt, Imp qt)		8.5 (9, 7-1/2)	

*: Refer to MA-10, "Fluids and Lubricants" .

Vehicle Speed When Shifting Gears

ACS007VU

Throttle position	Shift pattern	Vehicle speed km/h (MPH)					
		$D_1 \rightarrow D_2$	$D_2 \rightarrow D_3$	$D_3 \rightarrow D_4$	$D_4 \rightarrow D_3$	$D_3 \rightarrow D_2$	$D_2 \rightarrow D_1$
Full throttle	Comfort	57 - 65 (35 - 40)	107 - 115 (66 - 71)	167 - 175 (104 - 109)	163 - 171 (101 - 106)	97 - 105 (60 - 65)	41 - 49 (25 - 30)
	Auto power	57 - 65 (35 - 40)	107 - 115 (66 - 71)	167 - 175 (104 - 109)	163 - 171 (101 - 106)	97 - 105 (60 - 65)	41 - 49 (25 - 30)
Half throttle	Comfort	36 - 44 (22 - 27)	71 - 79 (44 - 49)	131 - 139 (81 - 86)	77 - 85 (48 - 53)	38 - 46 (23 - 28)	5 - 13 (3 - 8)
	Auto power	42 - 50 (26 - 31)	79 - 87 (49 - 54)	131 - 139 (81 - 86)	77 - 85 (48 - 53)	45 - 53 (28 - 33)	5 - 13 (3 - 8)

Vehicle Speed When Performing and Releasing Look-up

ACS008QK

Throttle position	Overdrive control switch (Shift position)	Shift pattern	Vehicle speed km/h (MPH)	
			Lock-up “ON”	Lock-up “OFF”
1/8	ON [D_4]	Comfort	61 - 69 (38 - 43)	51 - 59 (31 - 36)
		Auto power	61 - 69 (38 - 43)	51 - 59 (31 - 36)

Stall Revolution

ACS007VV

Stall revolution rpm	2,300 - 2,750

Line Pressure

ACS007VW

Engine speed	Line pressure kPa (kg/cm^2 , psi)	
	“D”, “2” and “1” positions	“R” position
At idle speed	500 (5.1, 73)	778 (7.9, 113)
At stall speed	1,233 (12.6, 179)	1,918 (19.6, 278)

Control Valves

ACS007VX

CONTROL VALVE AND PLUG RETURN SPRINGS

Unit: mm (in)

Parts			Item		
			Part number*	Free length	Outer diameter
Upper body	L14	Pilot valve spring	31742 3AX03	38.98 (1.535)	8.9 (0.350)
	L15	1-2 accumulator valve spring	31742 3AX00	20.5 (0.807)	6.95 (0.274)
		1-2 accumulator piston spring	31742 3AX08	55.26 (2.176)	19.6 (0.772)
	L16	1st reducing valve spring	31742 80X05	27.0 (1.063)	7.0 (0.276)
	L17	3-2 timing valve spring	31736 01X00	23.29 (0.917)	6.65 (0.262)
	L18	Overrun clutch reducing valve spring	31742 80X15	37.5 (1.476)	6.9 (0.272)
	L19	Torque converter relief valve spring	31742 80X07	31.0 (1.220)	9.0 (0.354)
	L20	Torque converter clutch control valve spring	31742 85X00	57.0 (2.244)	6.5 (0.256)
	L21	Cooler check valve spring	31742 85X01	29.4 (1.157)	6.0 (0.236)
Lower body	L3	Pressure regulator valve spring	31742 80X13	45.0 (1.772)	15.0 (0.591)
	L4	Overrun clutch control valve spring	31762 80X00	21.7 (0.854)	7.0 (0.276)
	L5	Accumulator control valve spring	31742 80X02	22.0 (0.866)	6.5 (0.256)
	L6	Shift valve A spring	31762 80X00	21.7 (0.854)	7.0 (0.276)
	L7	Shuttle valve spring	31762 41X04	51.0 (2.008)	5.65 (0.222)
	L12	Shift valve B spring	31762 80X00	21.7 (0.854)	7.0 (0.276)
	L13	Pressure modifier piston spring	31742 41X15	30.5 (1.201)	9.8 (0.386)
		Pressure modifier valve spring	31742 80X16	32.0 (1.260)	6.9 (0.272)
	—	Oil cooler relief valve spring	31872 31X00	17.02 (0.670)	8.0 (0.315)

*: Always check with the Parts Department for the latest parts information.

Accumulator

ACS007VY

O-RING

Unit: mm (in)

Accumulator	Part number*	Inner diameter (Small)	Part number*	Inner diameter (Large)
Servo release accumulator	31526 41X03	26.9 (1.059)	31526 41X02	44.2 (1.740)
N-D accumulator	31526 31X08	34.6 (1.362)	31672 21X00	39.4 (1.551)

*: Always check with the Parts Department for the latest parts information.

RETURN SPRING

Unit: mm (in)

Accumulator	Part number*	Free length	Outer diameter
Servo release accumulator	31605 80X00	52.5 (2.067)	20.1 (0.791)
N-D accumulator	31605 31X15	43.5 (1.713)	28.0 (1.102)

*: Always check with the Parts Department for the latest parts information.

Clutch and Brakes

ACS007VZ

REVERSE CLUTCH

Model code number		85X64, 85X65	
Number of drive plates		2	
Number of driven plates		2	
Drive plate thickness mm (in)	Standard	1.6 (0.063)	
	Wear limit	1.4 (0.055)	
Driven plate thickness mm (in)	Standard	1.8 (0.071)	
Clearance mm (in)	Standard	0.5 - 0.8 (0.020 - 0.031)	
	Wear limit	1.2 (0.047)	
Thickness of retaining plates		Thickness mm (in)	Part number*
		6.6 (0.260) 6.8 (0.268) 7.0 (0.276) 7.2 (0.283) 7.4 (0.291) 7.6 (0.299) 7.8 (0.307)	31537 80X78 31537 80X79 31537 80X80 31537 80X81 31537 80X82 31537 80X20 31537 80X21

*: Always check with the Parts Department for the latest parts information.

HIGH CLUTCH

Model code number			85X64, 85X65	
Number of drive plates			3	
Number of driven plates			7*1 + 1*2	
Drive plate thickness mm (in)	Standard		1.6 (0.063)	
	Wear limit		1.4 (0.055)	
Driven plate thickness mm (in)	*1	Standard	1.4 (0.055)	
	*2	Standard	2.0 (0.079)	
Clearance mm (in)	Standard		1.8 - 2.2 (0.071 - 0.087)	
	Wear limit		2.8 (0.110)	
Thickness of retaining plates			Thickness mm (in)	Part number*
			3.2 (0.126) 3.4 (0.134) 3.6 (0.142) 3.8 (0.150) 4.0 (0.157)	31537 81X11 31537 81X12 31537 81X13 31537 81X14 31537 81X15

*: Always check with the Parts Department for the latest parts information.

FORWARD CLUTCH

Model code number		85X64, 85X65	
Number of drive plates		5	
Number of driven plates		5	
Drive plate thickness mm (in)	Standard	1.6 (0.063)	
	Wear limit	1.4 (0.055)	
Driven plate thickness mm (in)	Standard	1.8 (0.071)	
Clearance mm (in)	Standard	0.45 - 0.85 (0.0177 - 0.0335)	
	Wear limit	1.85 (0.0728)	
Thickness of retaining plates		Thickness mm (in)	Part number*
		3.2 (0.126) 3.4 (0.134) 3.6 (0.142) 3.8 (0.150) 4.0 (0.157) 4.2 (0.165) 4.4 (0.173)	31537 80X76 31537 80X75 31537 80X70 31537 80X71 31537 80X72 31537 80X73 31537 80X74

*: Always check with the Parts Department for the latest parts information.

OVERRUN CLUTCH

Model code number		85X64, 85X65	
Number of drive plates		3	
Number of driven plates		5	
Drive plate thickness mm (in)	Standard	1.6 (0.063)	
	Wear limit	1.4 (0.055)	
Driven plate thickness mm (in)	Standard	1.6 (0.063)	
Clearance mm (in)	Standard	0.7 - 1.1 (0.028 - 0.043)	
	Wear limit	1.7 (0.067)	
Thickness of retaining plates		Thickness mm (in)	Part number*
		3.0 (0.118) 3.2 (0.126) 3.4 (0.134) 3.6 (0.142) 3.8 (0.150)	31537 80X65 31537 80X66 31537 80X67 31537 80X68 31537 80X69

*: Always check with the Parts Department for the latest parts information.

LOW & REVERSE BRAKE

Model code number		85X64, 85X65
Number of drive plates		6
Number of driven plates		6
Drive plate thickness mm (in)	Standard	1.8 (0.071)
	Wear limit	1.6 (0.063)
Driven plate thickness mm (in)	Standard	1.8 (0.071)
Clearance mm (in)	Standard	1.7 - 2.1 (0.067 - 0.083)
	Wear limit	3.3 (0.130)

	Thickness mm (in)	Part number*
Thickness of retaining plates	2.0 (0.079) 2.2 (0.087) 2.4 (0.094) 2.6 (0.102) 2.8 (0.110) 3.0 (0.118) 3.2 (0.126) 3.4 (0.134)	31667 80X10 31667 80X11 31667 80X12 31667 80X13 31667 80X14 31667 80X15 31667 80X16 31667 80X17

*: Always check with the Parts Department for the latest parts information.

CLUTCH AND BRAKE RETURN SPRINGS

Unit: mm (in)

Parts	Part number*	Free length	Outer diameter
Forward clutch (Overrun clutch) (22 pcs)	31505 80X02	21.4 (0.843)	10.3 (0.406)
High clutch (12 pcs)	31505 80X05	22.5 (0.886)	10.8 (0.425)
Low & reverse brake (24 pcs)	31505 80X07	24.1 (0.949)	6.6 (0.260)

*: Always check with the Parts Department for the latest parts information.

BRAKE BAND

Anchor end pin tightening torque N·m (kg-m, in-lb)	4.9 (0.50, 43)
Number of returning revolutions for anchor end pin	2.5
Lock nut tightening torque N·m (kg-m, ft-lb)	34 (3.5, 25)

Final Drive

ACS007W0

DIFFERENTIAL SIDE GEAR CLEARANCE

Clearance between side gear and differential case with washer mm (in)	0.1 - 0.2 (0.004 - 0.008)

DIFFERENTIAL SIDE GEAR THRUST WASHERS

Thickness mm (in)	Part number*
0.75 (0.0295) 0.80 (0.0315) 0.85 (0.0335) 0.90 (0.0354) 0.95 (0.0374)	38424 81X00 38424 81X01 38424 81X02 38424 81X03 38424 81X04

*: Always check with the Parts Department for the latest parts information.

DIFFERENTIAL SIDE BEARING PRELOAD ADJUSTING SHIMS

Thickness mm (in)	Part number*
0.48 (0.0189) 0.52 (0.0205) 0.56 (0.0220) 0.60 (0.0236) 0.64 (0.0252) 0.68 (0.0268) 0.72 (0.0283) 0.76 (0.0299) 0.80 (0.0315) 0.84 (0.0331) 0.88 (0.0346) 0.92 (0.0362)	31438 80X00 31438 80X01 31438 80X02 31438 80X03 31438 80X04 31438 80X05 31438 80X06 31438 80X07 31438 80X08 31438 80X09 31438 80X10 31438 80X11

*: Always check with the Parts Department for the latest parts information.

BEARING PRELOAD

Differential side bearing preload mm (in)	0.05 - 0.09 (0.0020 - 0.0035)

TURNING TORQUE

Turning torque of final drive assembly N·m (kg-cm, in-lb)	0.78 - 1.37 (8.0 - 14.0, 6.9 - 12.2)

Planetary Carrier and Oil Pump

ACS007W1

PLANETARY CARRIER

Clearance between planetary carrier and pinion washer mm (in)	Standard	0.20 - 0.70 (0.0079 - 0.0276)
	Allowable limit	0.80 (0.0315)

OIL PUMP

Oil pump side clearance mm (in)		0.030 - 0.050 (0.0012 - 0.0020)	
Thickness of inner gears and outer gears		Inner gear	
		Thickness mm (in)	Part number*
		11.99 - 12.0 (0.4720 - 0.4724) 11.98 - 11.99 (0.4717 - 0.4720) 11.97 - 11.98 (0.4713 - 0.4717)	31346 80X00 31346 80X01 31346 80X02
		Outer gear	
		Thickness mm (in)	Part number*
		11.99 - 12.0 (0.4720 - 0.4724) 11.98 - 11.99 (0.4717 - 0.4720) 11.97 - 11.98 (0.4713 - 0.4717)	31347 80X00 31347 80X01 31347 80X02
Clearance between oil pump housing and outer gear mm (in)	Standard	0.111 - 0.181 (0.0044 - 0.0071)	
	Allowable limit	0.181 (0.0071)	
Oil pump cover seal ring clearance mm (in)	Standard	0.1 - 0.25 (0.0039 - 0.0098)	
	Allowable limit	0.25 (0.0098)	

*: Always check with the Parts Department for the latest parts information.

Input Shaft

ACS007W2

SEAL RING CLEARANCE

Input shaft seal ring clearance mm (in)	Standard	0.08 - 0.23 (0.0031 - 0.0091)
	Allowable limit	0.23 (0.0091)

SEAL RING

Outer diameter mm (in)	Inner diameter mm (in)	Width mm (in)	Part number*
26 (1.024)	22.4 (0.882)	1.97 (0.078)	31525 80X02

*: Always check with the Parts Department for the latest parts information.

Reduction Pinion Gear

ACS007W3

TURNING TORQUE

Turning torque of reduction pinion gear N·m (kg-cm, in-lb)	0.05 - 0.39 (0.5 - 4.0, 0.43 - 3.47)

REDUCTION PINION GEAR ADJUSTING SHIMS

No.	Thickness mm (in)	Part number	No.	Thickness mm (in)	Part number*
1	5.00 (0.1969)	31439 81X00	33	5.64 (0.2220)	31439 81X63
2	5.02 (0.1976)	31439 81X01	34	5.66 (0.2228)	31439 81X64
3	5.04 (0.1984)	31439 81X02	35	5.68 (0.2236)	31439 81X65
4	5.06 (0.1992)	31439 81X03	36	5.70 (0.2244)	31439 81X66
5	5.08 (0.2000)	31439 81X04	37	5.72 (0.2252)	31439 81X67
6	5.10 (0.2008)	31439 81X05	38	5.74 (0.2260)	31439 81X68
7	5.12 (0.2016)	31439 81X06	39	5.76 (0.2268)	31439 81X69
8	5.14 (0.2024)	31439 81X07	40	5.78 (0.2276)	31439 81X70
9	5.16 (0.2031)	31439 81X08	41	5.80 (0.2283)	31439 81X71
10	5.18 (0.2039)	31439 81X09	42	5.82 (0.2291)	31439 81X72
11	5.20 (0.2047)	31439 81X10	43	5.84 (0.2299)	31439 81X73
12	5.22 (0.2055)	31439 81X11	44	5.86 (0.2307)	31439 81X74
13	5.24 (0.2063)	31439 81X12	45	4.60 (0.1811)	31439 85X01
14	5.26 (0.2071)	31439 81X13	46	4.62 (0.1819)	31439 85X02
15	5.28 (0.2079)	31439 81X14	47	4.64 (0.1827)	31439 85X03
16	5.30 (0.2087)	31439 81X15	48	4.66 (0.1835)	31439 85X04
17	5.32 (0.2094)	31439 81X16	49	4.68 (0.1843)	31439 85X05
18	5.34 (0.2102)	31439 81X17	50	4.70 (0.1850)	31439 85X06
19	5.36 (0.2110)	31439 81X18	51	4.72 (0.1858)	31439 83X11
20	5.38 (0.2118)	31439 81X19	52	4.74 (0.1866)	31439 83X12
21	5.40 (0.2126)	31439 81X20	53	4.76 (0.1874)	31439 83X13
22	5.42 (0.2134)	31439 81X21	54	4.78 (0.1882)	31439 83X14
23	5.44 (0.2142)	31439 81X22	55	4.80 (0.1890)	31439 83X15
24	5.46 (0.2150)	31439 81X23	56	4.82 (0.1898)	31439 83X16
25	5.48 (0.2157)	31439 81X24	57	4.84 (0.1906)	31439 83X17
26	5.50 (0.2165)	31439 81X46	58	4.86 (0.1913)	31439 83X18
27	5.52 (0.2173)	31439 81X47	59	4.88 (0.1921)	31439 83X19
28	5.54 (0.2181)	31439 81X48	60	4.90 (0.1929)	31439 83X20
29	5.56 (0.2189)	31439 81X49	61	4.92 (0.1937)	31439 83X21
30	5.58 (0.2197)	31439 81X60	62	4.94 (0.1945)	31439 83X22
31	5.60 (0.2205)	31439 81X61	63	4.96 (0.1953)	31439 83X23
32	5.62 (0.2213)	31439 81X62	64	4.98 (0.1961)	31439 83X24

*: Always check with the Parts Department for the latest parts information.

Band Servo

ACS007W4

RETURN SPRING

Unit: mm (in)

Return spring	Part number*	Free length	Outer diameter
2nd servo return spring	31605 31X20	32.5 (1.280)	25.9 (1.020)
OD servo return spring	31605 80X07	62.6 (2.465)	21.7 (0.854)

*: Always check with the Parts Department for the latest parts information.

Output Shaft

ACS007W5

SEAL RING CLEARANCE

Output shaft seal ring clearance mm (in)	Standard	0.10 - 0.25 (0.0039 - 0.0098)
	Allowable limit	0.25 (0.0098)

SEAL RING

Outer diameter mm (in)	Inner diameter mm (in)	Width mm (in)	Part number*
33.71 (1.327)	30.25 (1.191)	1.95 (0.077)	31525 80X09

*: Always check with the Parts Department for the latest parts information.

END PLAY

Output shaft end play mm (in)	0 - 0.15 (0 - 0.0059)

OUTPUT SHAFT ADJUSTING SHIMS

Thickness mm (in)	Part number*
0.80 (0.0315)	31438 80X60
0.84 (0.0331)	31438 80X61
0.88 (0.0346)	31438 80X62
0.92 (0.0362)	31438 80X63
0.96 (0.0378)	31438 80X64
1.00 (0.0394)	31438 80X65
1.04 (0.0409)	31438 80X66
1.08 (0.0425)	31438 80X67
1.12 (0.0441)	31438 80X68
1.16 (0.0457)	31438 80X69
1.20 (0.0472)	31438 80X70

*: Always check with the Parts Department for the latest parts information.

Bearing Retainer

ACS007W6

SEAL RING CLEARANCE

Bearing retainer seal ring clearance mm (in)	Standard	0.10 - 0.30 (0.0039 - 0.0118)
	Allowable limit	0.30 (0.0118)

Total End Play

ACS007W7

Total end play mm (in)	0.25 - 0.55 (0.0098 - 0.0217)

BEARING RACE FOR ADJUSTING TOTAL END PLAY

Thickness mm (in)	Part number*
0.8 (0.031)	31435 80X00
1.0 (0.039)	31435 80X01
1.2 (0.047)	31435 80X02
1.4 (0.055)	31435 80X03
1.6 (0.063)	31435 80X04
1.8 (0.071)	31435 80X05
2.0 (0.079)	31435 80X06
0.9 (0.035)	31435 80X09
1.1 (0.043)	31435 80X10
1.3 (0.051)	31435 80X11
1.5 (0.059)	31435 80X12
1.7 (0.067)	31435 80X13
1.9 (0.075)	31435 80X14

*: Always check with the Parts Department for the latest parts information.

Reverse Clutch End Play

ACS007W8

Reverse clutch end play mm (in)	0.61 - 1.0 (0.0240 - 0.039)

THRUST WASHERS FOR ADJUSTING REVERSE CLUTCH DRUM END PLAY

Thickness mm (in)	Part number*
0.80 (0.0315)	31508 80X13
0.95 (0.0374)	31508 80X14
1.10 (0.0433)	31508 80X15
1.25 (0.0492)	31508 80X16
1.40 (0.0551)	31508 80X17
1.55 (0.0610)	31508 80X18
1.70 (0.0669)	31508 80X19
1.85 (0.0728)	31508 80X20

*: Always check with the Parts Department for the latest parts information.

Removal and Installation

ACS007W9

Unit: mm (in)

Distance between end of converter housing and torque converter	14 (0.55)

Shift Solenoid Valves

ACS007WA

Gear position	1	2	3	4
Shift solenoid valve A	ON (Closed)	OFF (Open)	OFF (Open)	ON (Closed)
Shift solenoid valve B	ON (Closed)	ON (Closed)	OFF (Open)	OFF (Open)

Solenoid Valves

ACS007WB

Solenoid valves	Resistance (Approx.) Ω	Terminal No.
Shift solenoid valve A	20 - 30	2
Shift solenoid valve B	5 - 20	1
Overrun clutch solenoid valve	20 - 30	3
Line pressure solenoid valve	2.5 - 5	4
Torque converter clutch solenoid valve	5 - 20	5

A/T Fluid Temperature Sensor

ACS007WC

Condition	Specification (Approximately)	
Cold [20°C (68°F)] ↓ Hot [80°C (176°F)]	1.5 V ↓ 0.5 V	2.5 kΩ ↓ 0.3 kΩ

Revolution Sensor

ACS007WD

Condition	Judgement standard
When moving at 20 km/h (12 MPH)	450 Hz (Approx.)
When vehicle parks.	Under 1.3 V or over 4.5 V

Dropping Resistor

ACS007WE

Resistance	12 Ω (Approx.)